# P6546/44-Gustav

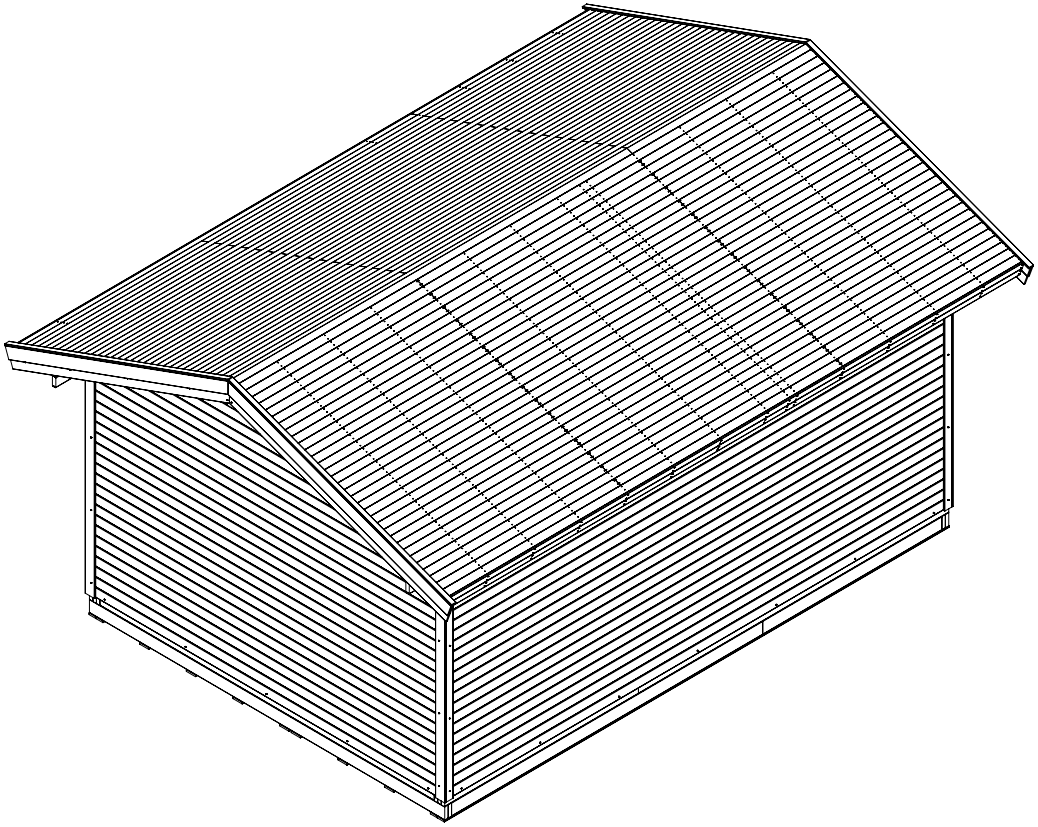

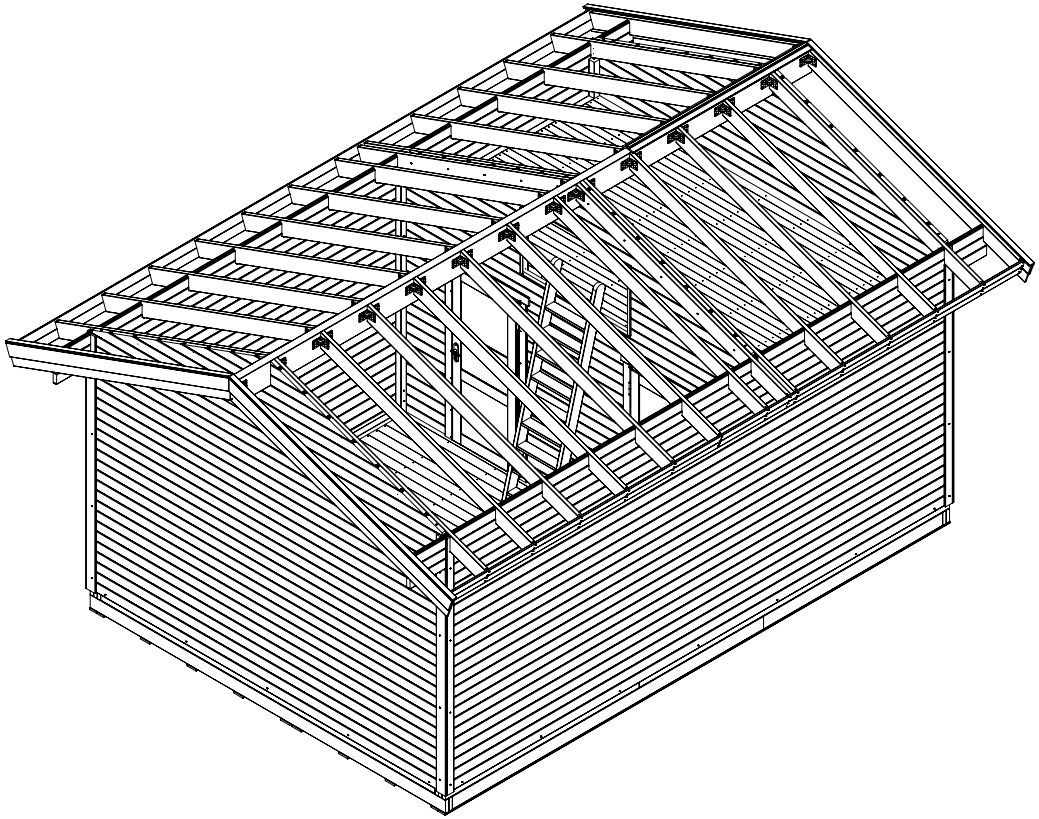

DE - Anweisungen für Montage, Wartung und sicheren Gebrauch.
EN - Instructions for assembly, maintenance and safe use.
FR - Instructions de montage, d’entretien et d’utilisation en toute sécurité.
NL - Instructies voor montage, onderhoud en veilig gebruik.
CZ - Pokyny pro montáž, údržbu a bezpečné použití.
SK - Návod na montáž, údržbu a bezpečné používanie.
SWE - Monteringsanvisning

**Polhus**
Polhus Aktiebolag
Djäknegatan 31
211 35 Malmö
**https://www.polhus.com/**

Issue - A 18/04/2024

| Pos | 26.03.2024 Piece list - Stückliste - Liste des piéces - Elementi - Stuklijst - Tükitabel<br>Art. Nr. 4433092 | Q | P (mm) | L (mm) |
|---|---|---|---|---|
| 001 | | 44 | 44x114 | 6500 |
| 002 | | 4 | 44x114 | 7412 |
| 003 | | 4 | 44x114 | 456 |
| 004 | | 22 | 44x114 | 555 |
| 005 | | 1 | 44x86 | 3039 |
| 006 | | 19 | 44x114 | 3039 |
| 007 | | 1 | 44x114 | 3039 |
| 008 | | 52 | 44x114 | 4500 |
| 017 | | 2 | 44x86 | 650 |
| 018 | | 1 | 44x86 | 1380 |
| 019 | | 34 | 44x114 | 650 |
| 020 | | 17 | 44x114 | 1380 |
| 021 | | 1 | 44x114 | 4500 |
| 022 | | 8 | 44x114 | 1560 |
| WA-1 | 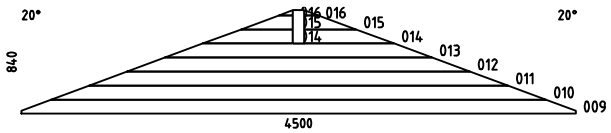 | 1 | | |
| WB-1 | 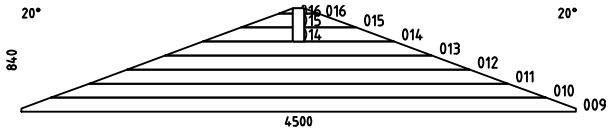 | 1 | | |
| WC-1 | 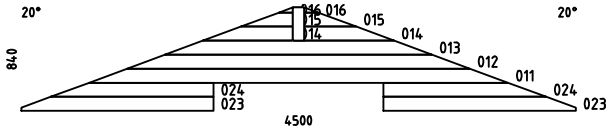 | 1 | | |
| PT1 | Floor fillet - Fussbodenleiste - Corniere de finition du plancher - Finitura per pavimento (battisco pa) - Vloerafwerklijst - Põrandaliist | 4 | 70x70 | 4360 |
| PT2 | Floor fillet - Fussbodenleiste - Corniere de finition du plancher - Finitura per pavimento (battisco pa) - Vloerafwerklijst - Põrandaliist | 6 | 70x70 | 3136 |
| VT1 | Mezzanine floor joists - Halbgeschoss balken - Solives de plancher mezzanine - Travi del pavimento mezzanino - Plaatduim scharnier - Vahelaetalad | 2 | 70x45 | 4360 |

| Pos | 26.03.2024 Piece list - Stückliste - Liste des piéces - Elementi - Stuklijst - Tükitabel<br>Art. Nr. 4433092 | Q | P (mm) | L (mm) |
|---|---|---|---|---|
| VT2 | Mezzanine floor joists - Halbgeschoss balken - Solives de plancher mezzanine - Travi del pavimento mezzanino - Plaatduim scharnier - Vahelaetalad | 9 | 44x146 | 3039 |
| IAR2 | Foundation - Fundament - Fondation - Fondamenta - Fundering - Immutatud alusraam | 14 | 120x18 | 3240 |
| IAR1 | Foundation - Fundament - Fondation - Fondamenta - Fundering - Immutatud alusraam | 8 | 90x18 | 3240 |
| AR2 | Foundation - Fundament - Fondation - Fondamenta - Fundering - Bastidor - Alusraam | 4 | 45x70 | 4298 |
| AR5 | Foundation - Fundament - Fondation - Fondamenta - Fundering - Bastidor - Alusraam | 13 | 45x70 | 4000 |
| AR3 | Foundation - Fundament - Fondation - Fondamenta - Fundering - Bastidor - Alusraam | 6 | 45x70 | 2480 |
| AR7 | Foundation - Fundament - Fondation - Fondamenta - Fundering - Bastidor - Alusraam | 7 | 45x70 | 2300 |
| AR1 | Foundation - Fundament - Fondation - Fondamenta - Fundering - Bastidor - Alusraam | 4 | 44x146 | 4568 |
| AR4 | Foundation - Fundament - Fondation - Fondamenta - Fundering - Bastidor - Alusraam | 13 | 44x146 | 4000 |
| AR6 | Foundation - Fundament - Fondation - Fondamenta - Fundering - Bastidor - Alusraam | 13 | 44x146 | 2304 |
| SR1 | RAFTERS | 30 | 44x170 | 2900 |
| A-PR | Roof beam - Dachbalken - Panne de toit - Perlina del tetto - Gordingen / dakbalk - Pärlin | 1 | 90x270 | **7412** |
| TB5-1 | Fascia board - Traufbrett - Bandeau de toit - Finitura lati tetto - Gevellijst - Räästalaud | 4 | 18x90 | 3517 |
| HLL-1 | Floor boards - Fussbodenbretter - Lame de plancher - Pavimento - Vloerhout - Põrandalaud | 58 | 112x28 | 4360 |
| FB-1 | Floor boards - Fussbodenbretter - Lame de plancher - Pavimento - Vloerhout - Põrandalaud | 34 | 90x18.5 | 4360 |
| RB-1 | Roof boards - Dachbretter - Voliges - Perlina per tetto - Dakhout - Katuselaud | 66 | 90x18.5 | 5093 |
| RB-2 | Roof boards - Dachbretter - Voliges - Perlina per tetto - Dakhout - Katuselaud | 66 | 90x18.5 | 2319 |
| DPL-1 | Roofing felt fillet - Dachpappenleiste - Baguette de fixation du feutre bitumeux - Asse per fissaggio guaina bituminosa - Afdeklijst asfaltpapier - Katusepapiliist | 4 | 18x58 | 3050 |
| PL3-1 | Railing strip - Begrenzungsleiste - Rembarde - Sbarra - Afscheidingslijst - Piirdelaud | 4 | 18x120 | 2850 |
| PL3-2 | Railing strip - Begrenzungsleiste - Rembarde - Sbarra - Afscheidingslijst - Piirdelaud | 4 | 18x120 | 2850 |
| P3-1 | Post - Pfosten - Poteau - Piede registrabile - Stijl - Post | 2 | 70x70 | 2061 |
| P3-2 | Post - Pfosten - Poteau - Piede registrabile - Stijl - Post | 8 | 70x70 | 2700 |

| Pos | 26.03.2024 Piece list - Stückliste - Liste des piéces - Elementi - Stuklijst - Tükitabel<br>Art. Nr. 4433092 | Q | P (mm) | L (mm) |
|---|---|---|---|---|
| TB5-2 | Fascia board - Traufbrett - Bandeau de toit - Finitura lati tetto - Gevellijst - Räästalaud 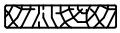 | 4 | 18x90 | 3895 |
| UT-1 | U-profile - U-profils - Profile u - Profilo ad u - U-profiel - U-profiil | 2 | 35x70 | 740 |
| UT-2 | U-profile - U-profils - Profile u - Profilo ad u - U-profiel - U-profiil | 1 | 35x70 | 1400 |
| GL-1 | Gable moulding - Giebelleiste - Planche de rive - Finitura per frontale e retro del tetto - Gevellijst - Viilulaud 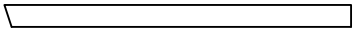 | 8 | 18x120 | 3050 |
| GL-2 | Gable moulding - Giebelleiste - Planche de rive - Finitura per frontale e retro del tetto - Gevellijst - Viilulaud 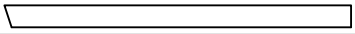 | 4 | 18x140 | 3050 |
| SH44 | Hammer block - Schlagholz - Calle de frappe - Blocco di legno da usare come cuscinetto quando si usa il martello - Slagklos - Löögiklots | 1 | | |
| | Metal corner - Metallwinkel - Corniere en métal - Angolo di metallo - Metalen hoek - Nurgik | 48 | 70x70x55 | |
| | Ladder clamp - Leiter klemme - Fixation de echelle - Uncino di metallo per fissare la sommità della scala a pioli - Ladderklem - Redeli fiksaator | 2 | | |
| GS | Gable segment - Deckblatt - Losange de finition - Decorazione in legno x frontale tetto - Gevelpunt segment - Romb | 2 | | |
| | Door - Tür - Porte - Porte - Deur - Uks | 1 | | |
| | Door - Tür - Porte - Porte - Deur - Uks | 1 | | |
| | | 1 | | |
| | 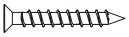 35mm | 400 | | |
| | 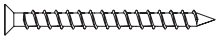 50mm | 250 | | |
| | 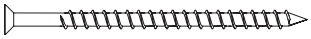 60mm | 40 | | |
| | 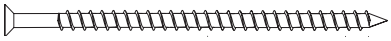 90mm | 1000 | | |
| | 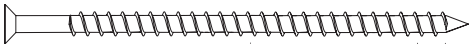 120mm | 60 | | |
| | 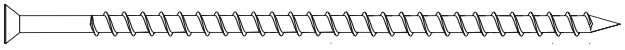 180mm | 250 | | |
| |  Nail | 1350 | | |
| | | | | |
| | | | | |
| | | | | |
| | | | | |

# IMPORTANT!

**PRE-DRILL**

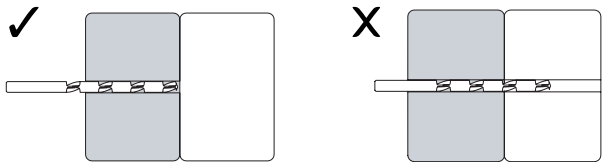


**FIX WITH SCREW**

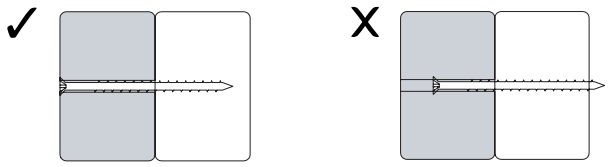


## Fixing Procedure

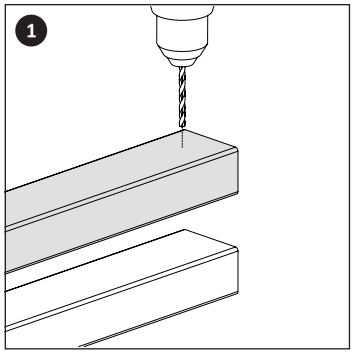


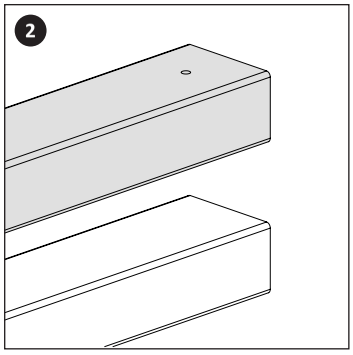


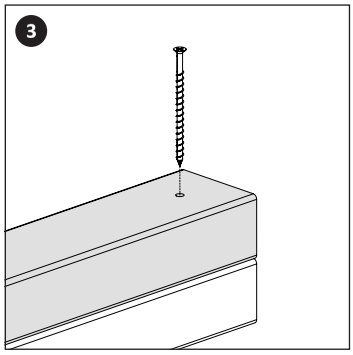


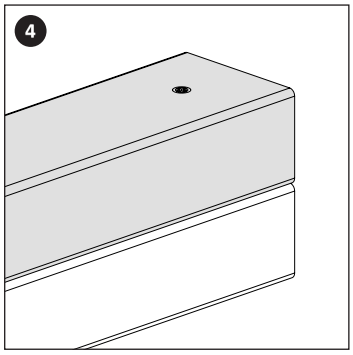


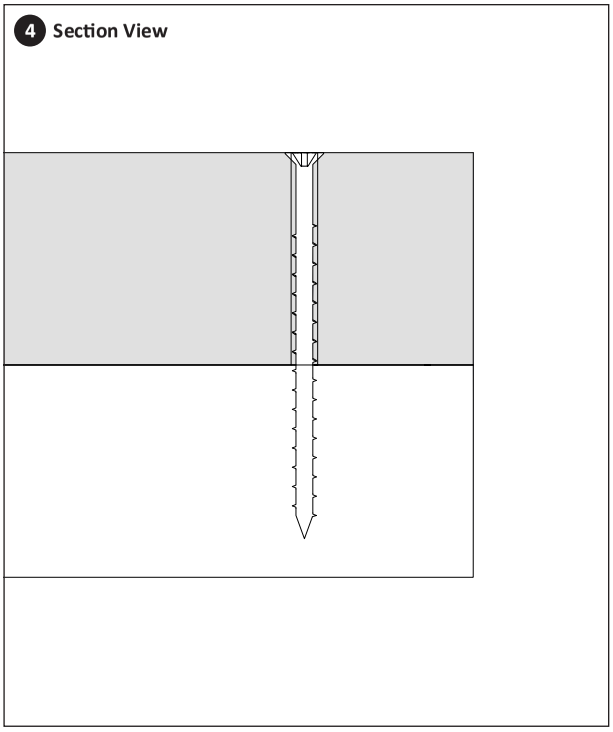


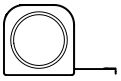

ALL MEASUREMENTS ARE IN MILLIMETRES
(mm) UNLESS STATED OTHERWISE

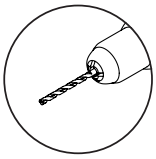

Pre-Drill
Vorbohren
Voorboren
Pré-perçage
Pre-perforazione
Pre-perforación

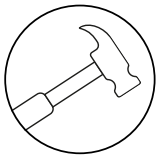

Hammer
Hammer
Hamer
Marteau
Martello
Martillo

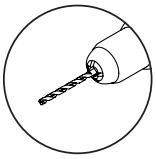

Pre-Drill
Vorbohren
Voorboren
Pré-perçage
Pre-perforazione
Pre-perforación

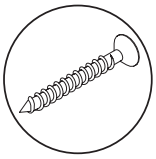

Fix with screw
Mit Schraube befestigen
Bevestig met schroef
Fixer avec une vis
Fissare con vite
Fijar con tornillo

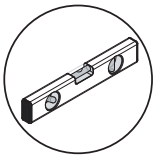

Vertical/Horizontal
Vertikale/Horizontal
Verticaal/Horizontaal
Vertical/Horizontal
Verticale/Orizzontale
Vertical/Horizontal

# Groundplan version 1

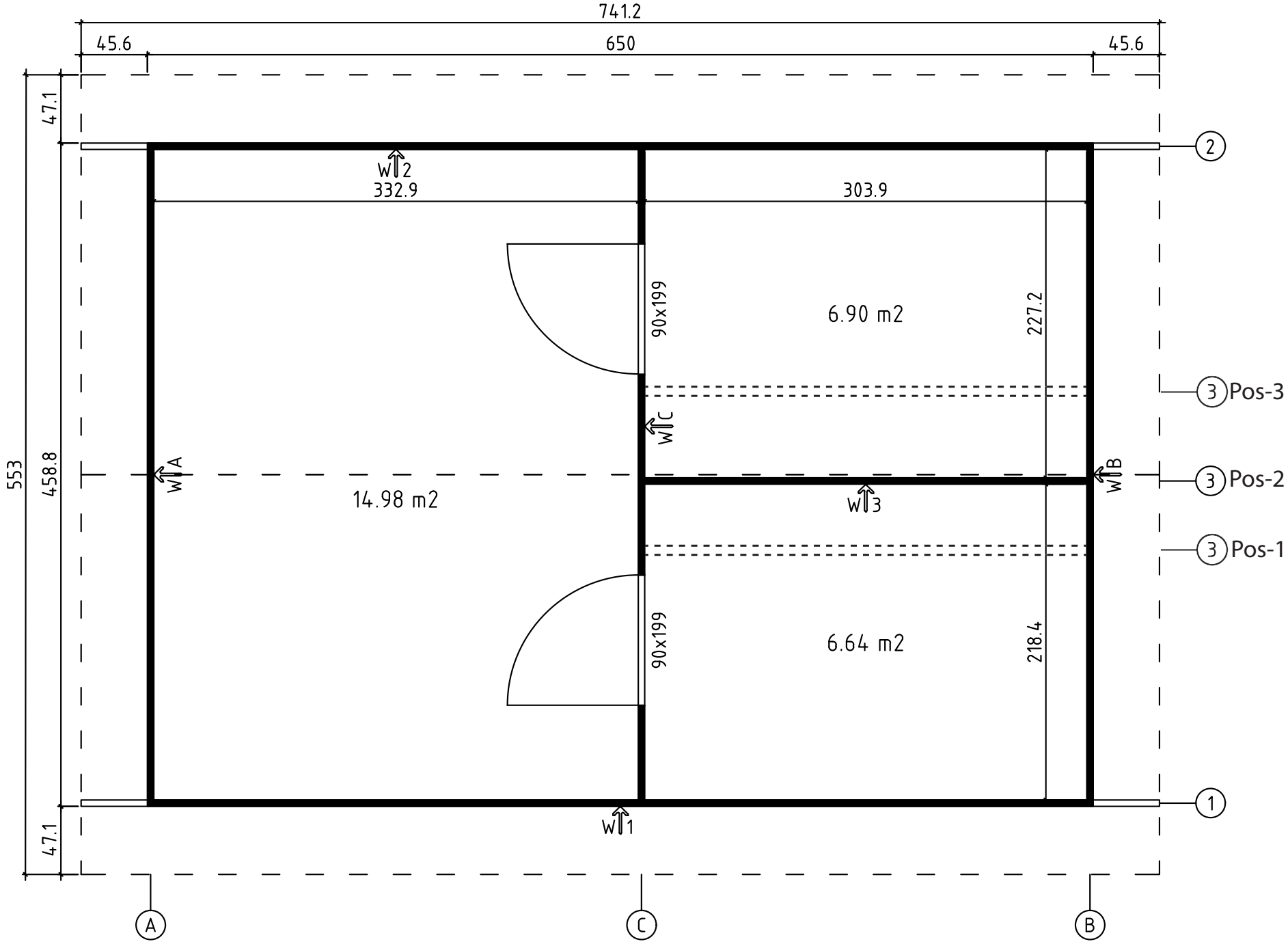

# Groundplan version 2

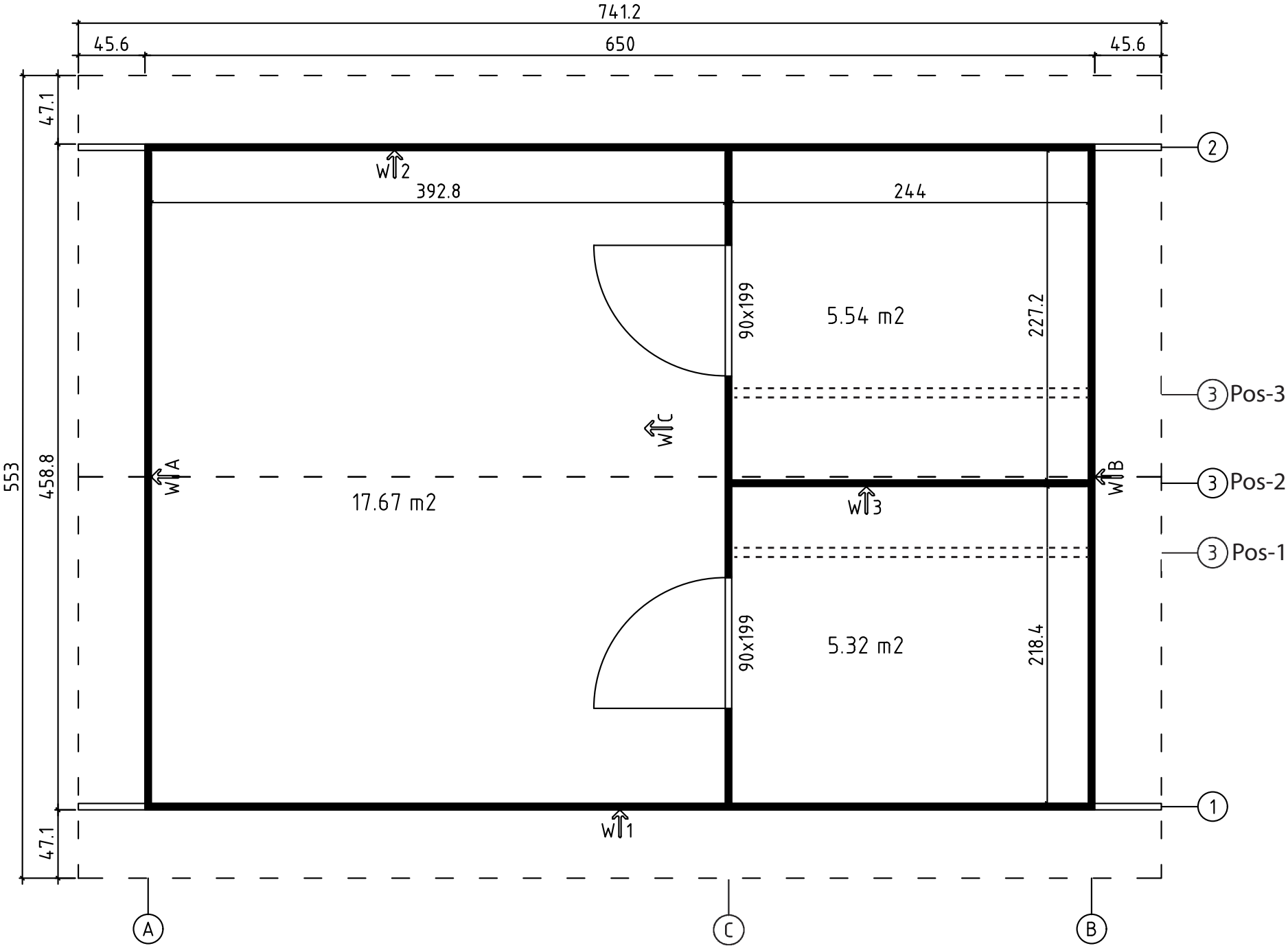

# Groundplan version 3

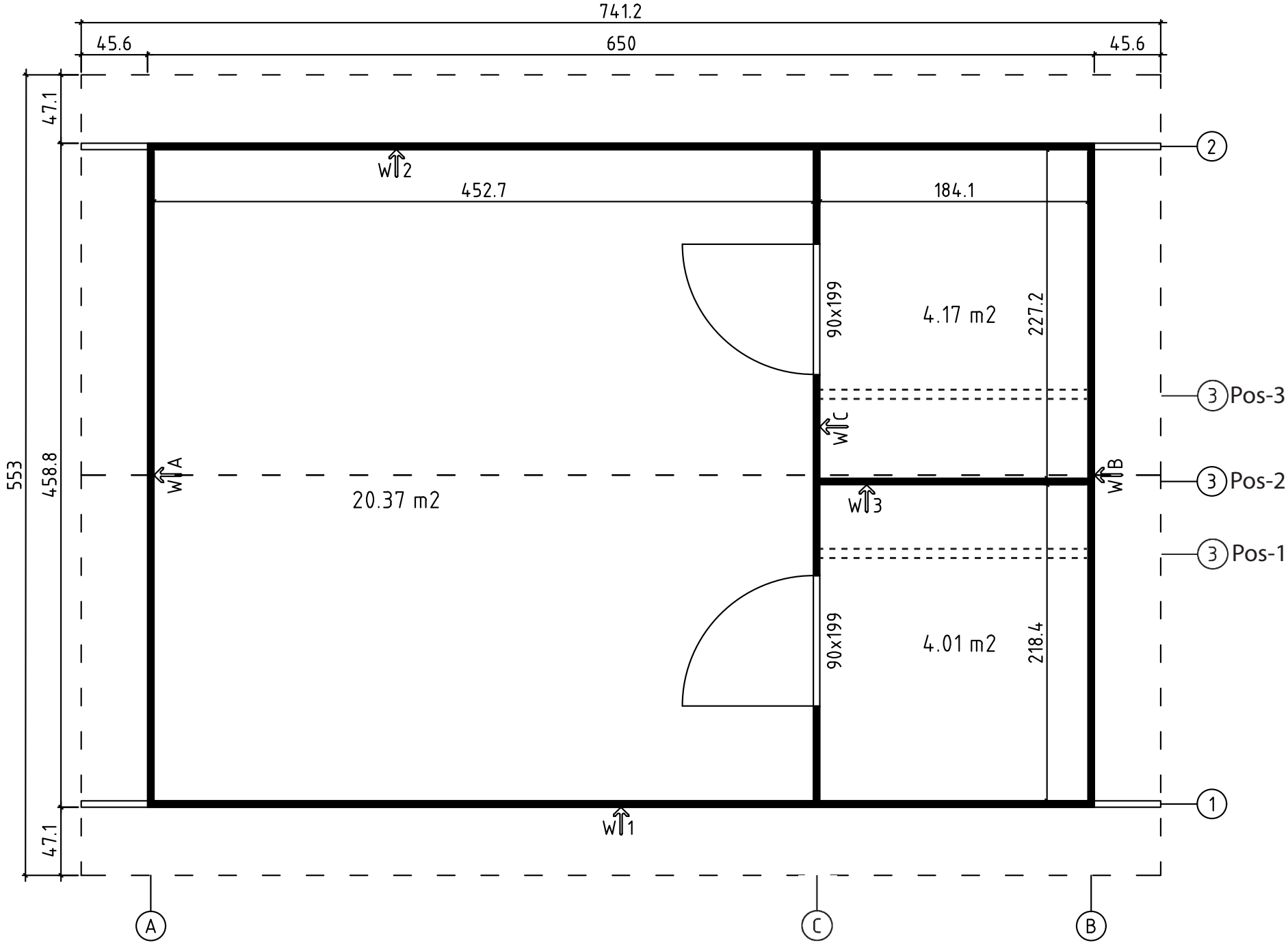

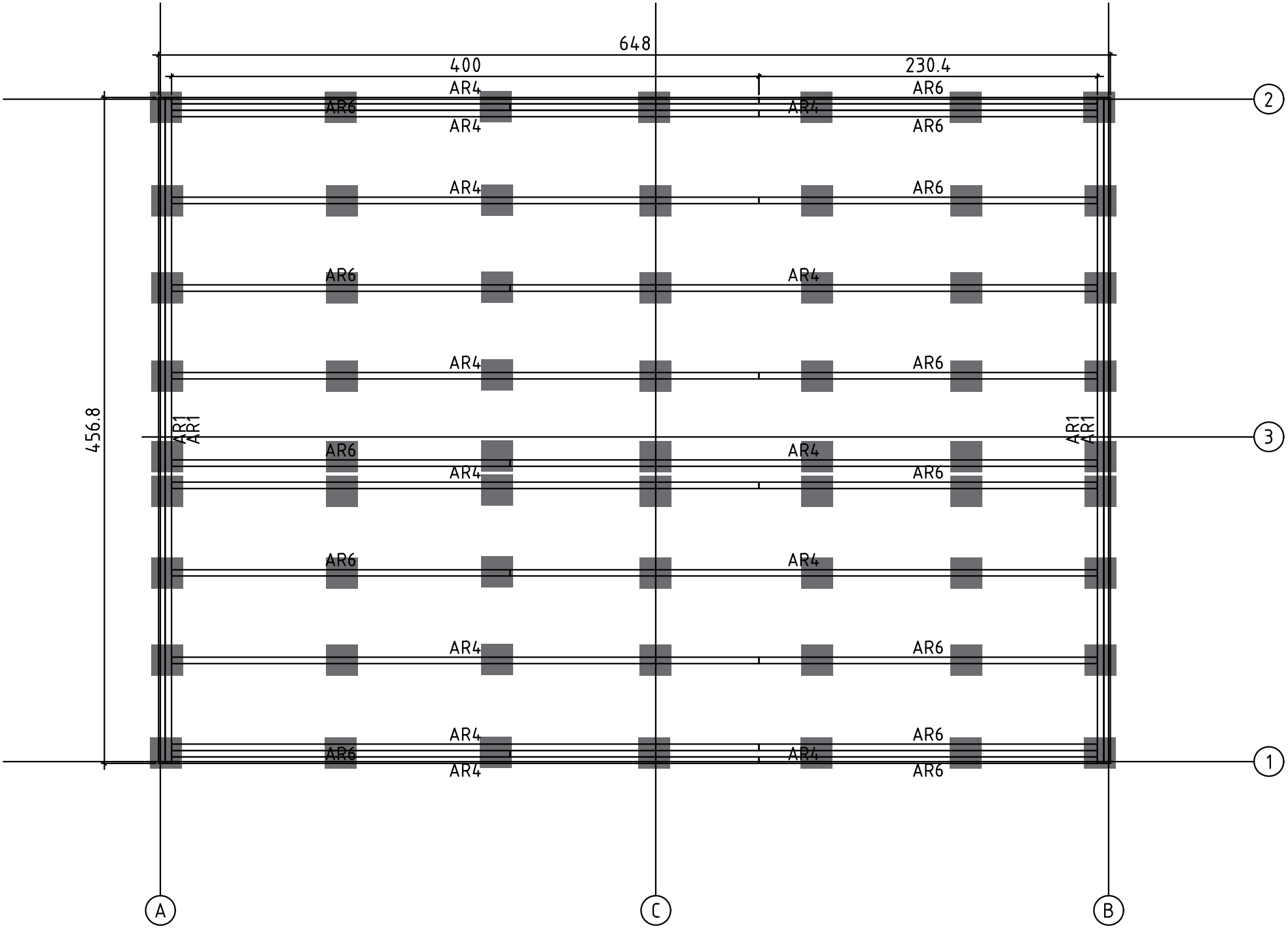
648
400
230.4
456.8
AR1
AR4
AR6
1
2
3
A
C
B

**1A**

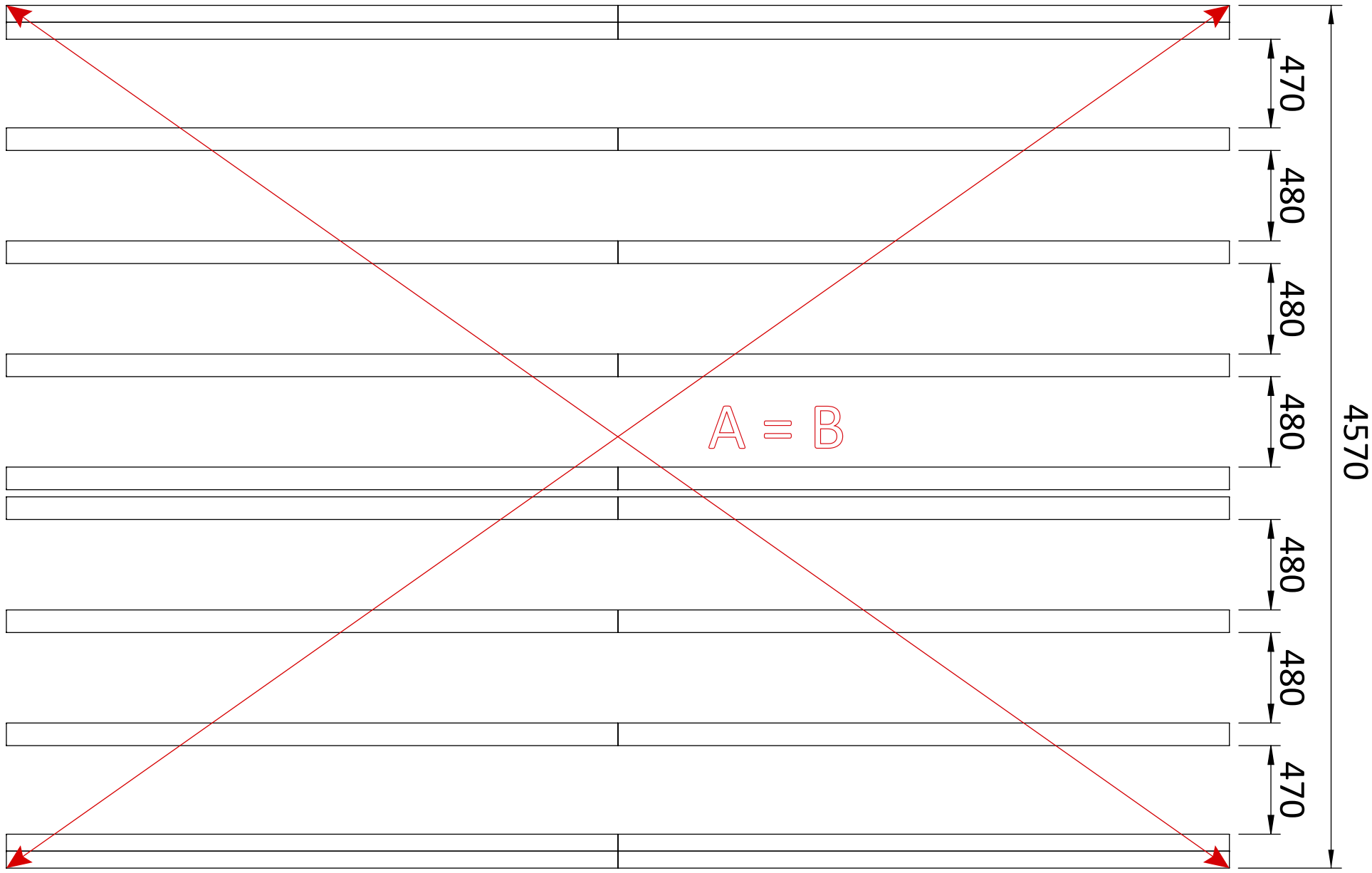

1B

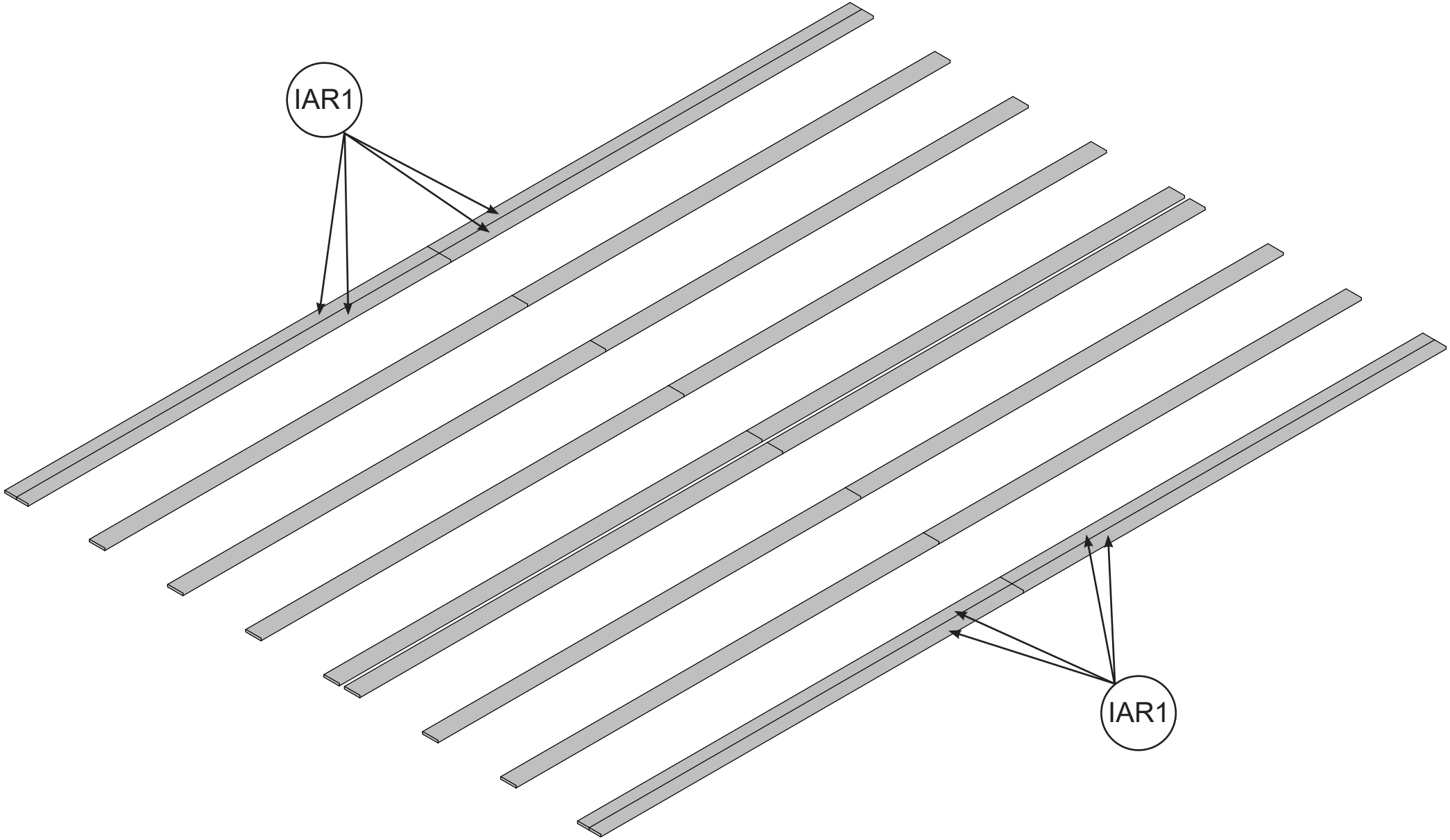

2A

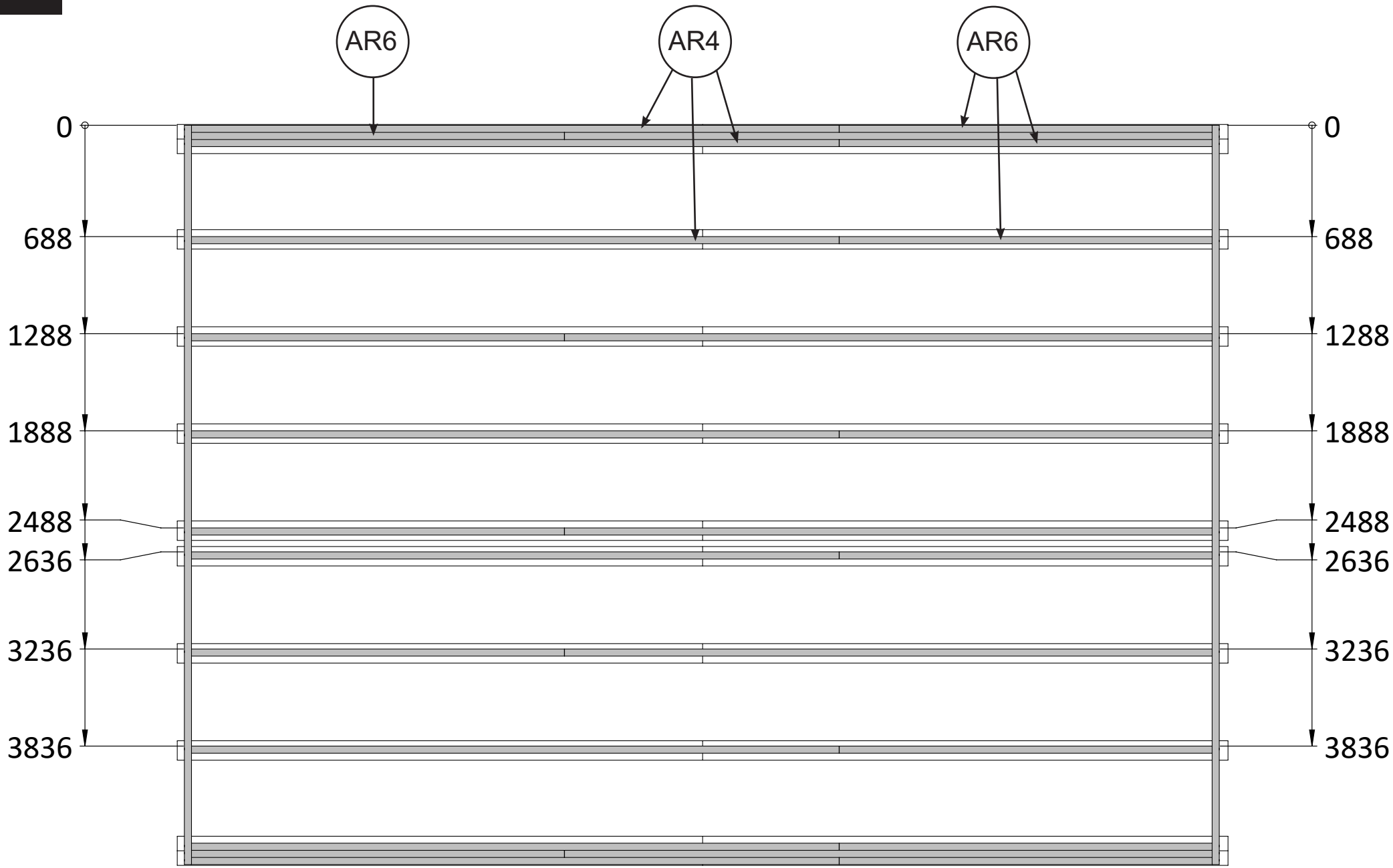
AR6
AR4
AR6
0
688
1288
1888
2488
2636
3236
3836
0
688
1288
1888
2488
2636
3236
3836

**2B**

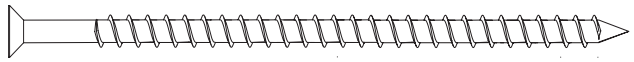

90mm

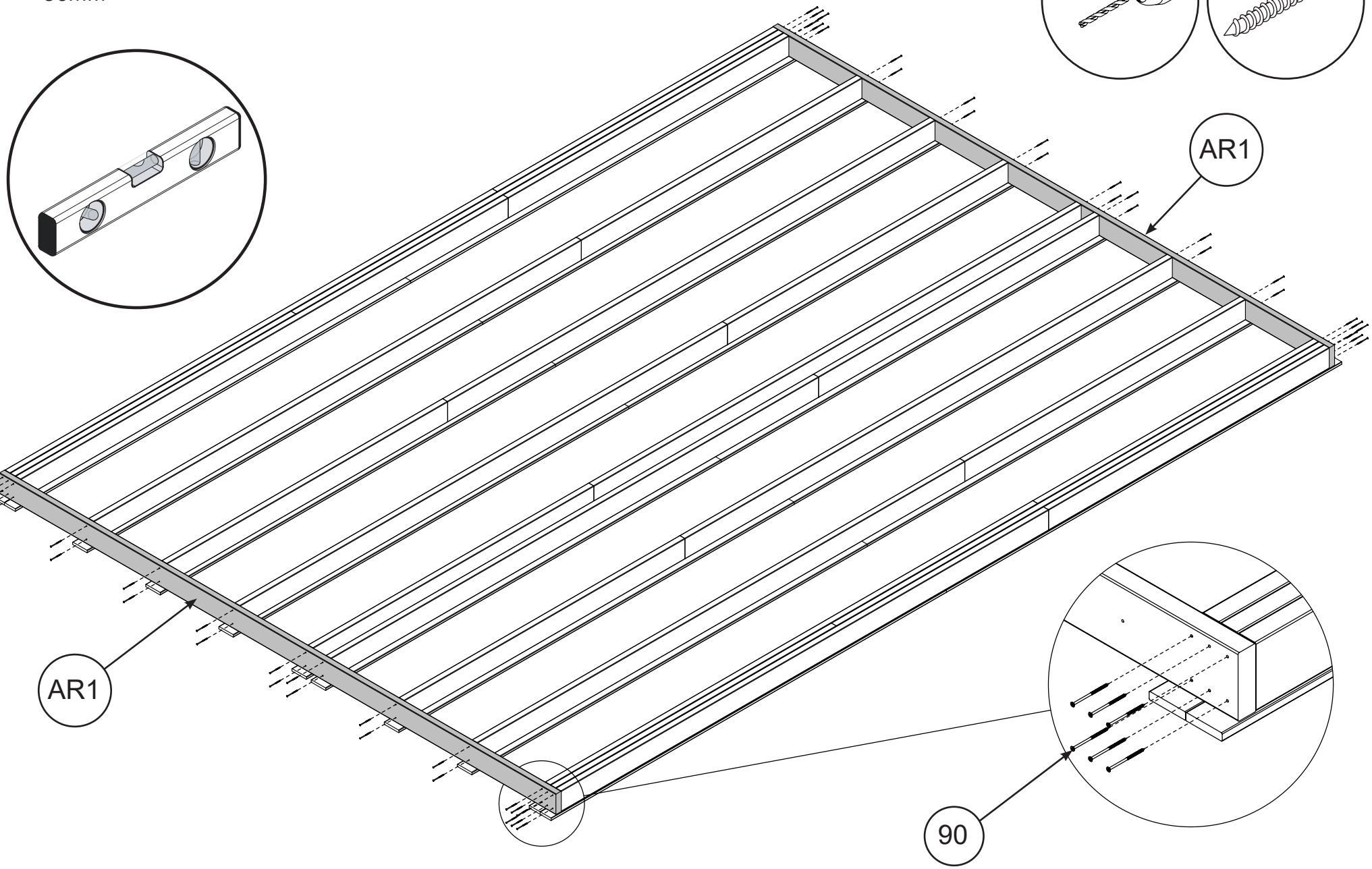

# 3

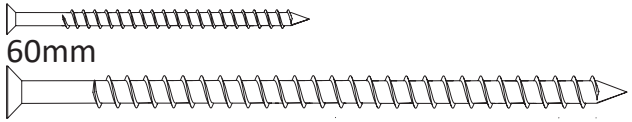


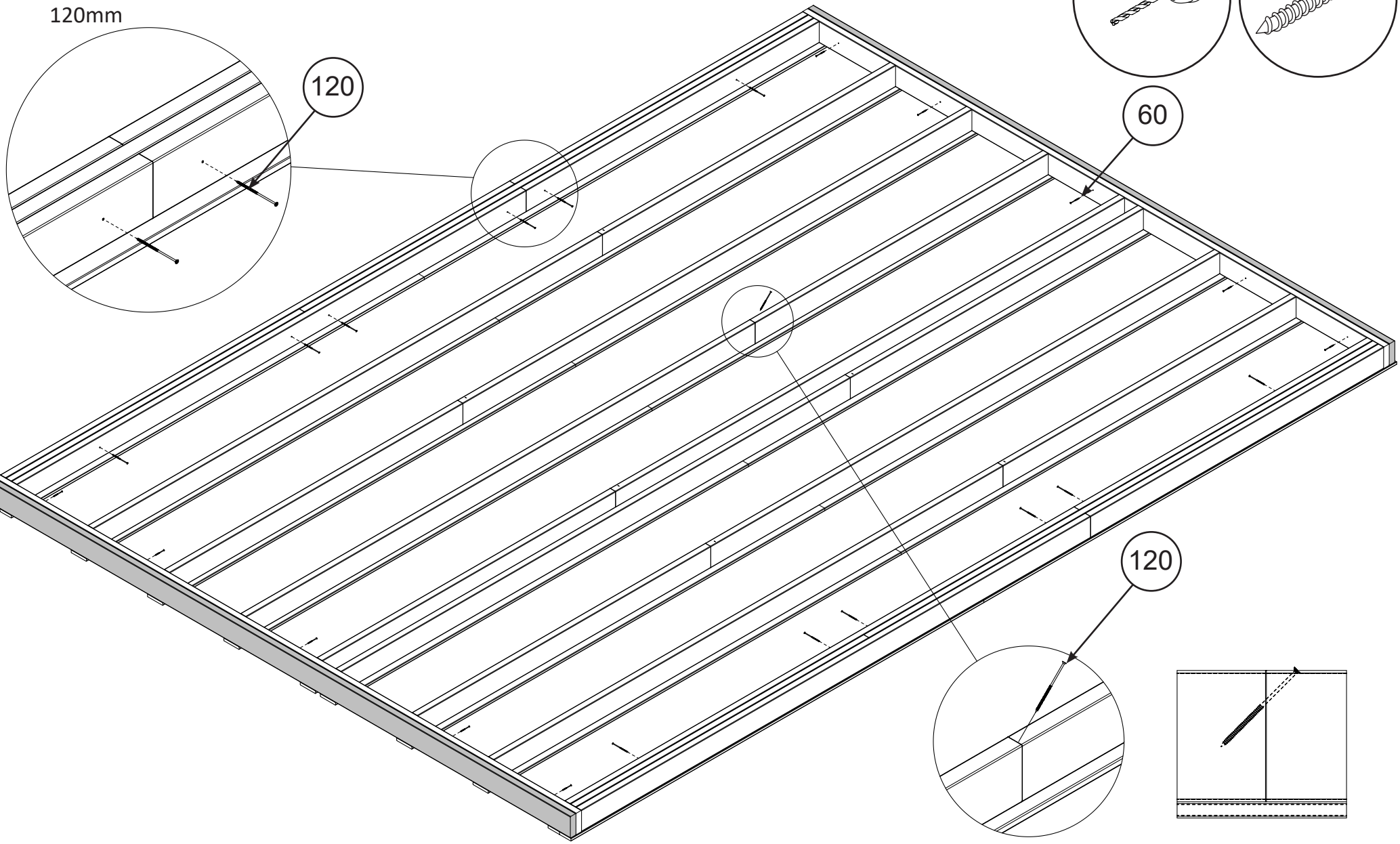

**4**



90mm

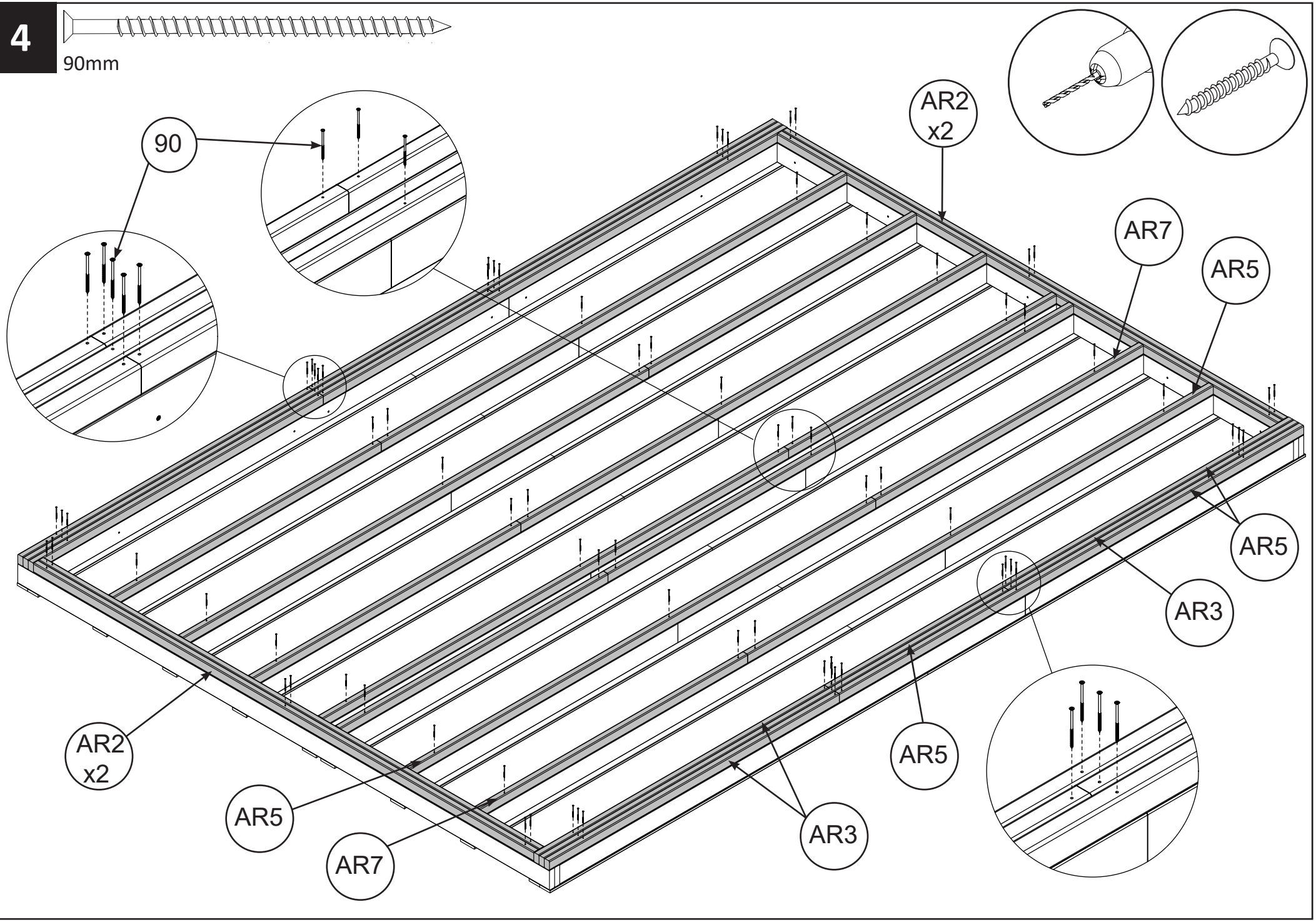

# 5A

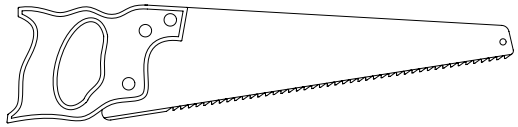

| WALL | GROUNDPLAN | USE ITEM | CUT | QTY | NEW IDENT |
|---|---|---|---|---|---|
| WC | 1 | PT1 | 3190<br>4360 | x 2 | PT1-3190 |
| | | PT2 | 2900<br>3136 | x 2 | PT2-2900 |
| | 2 | PT1 | 3788<br>4360 | x 2 | PT1-3788 |
| | | PT2 | 2300<br>3136 | x 2 | PT2-2300 |
| | 3 | PT1 | 4133<br>4360 | x 2 | PT1-4133 |
| | | PT2 | 1700<br>200<br>3136 | x 2 | PT2-1700<br>+<br>PT2-200 |

# 5B

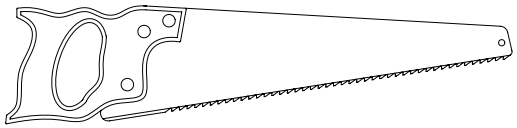

| WALL | Pos-* | USE ITEM | CUT | QTY | NEW IDENT |
|---|---|---|---|---|---|
| W3 | 1 | PT1 | 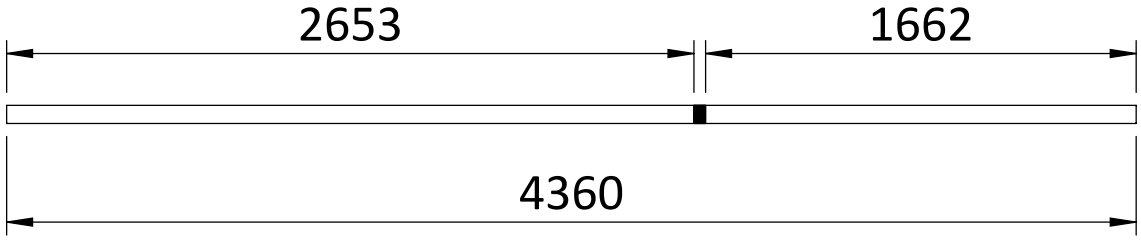  | x 1 | PT1-2653<br>+<br>PT1-1662 |
| | 2 | PT1 | 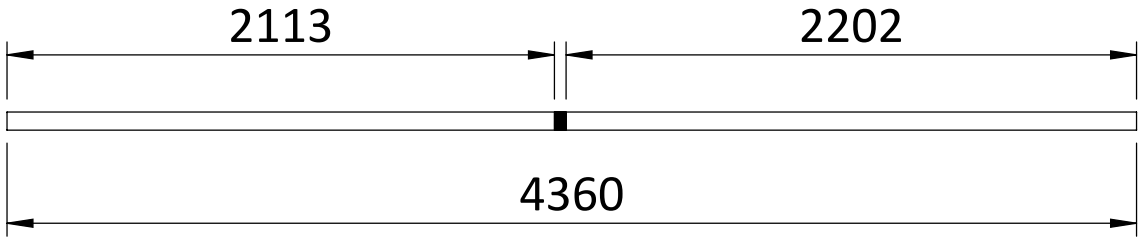  | x 1 | PT1-2113<br>+<br>PT1-2202 |
| | 3 | PT1 | 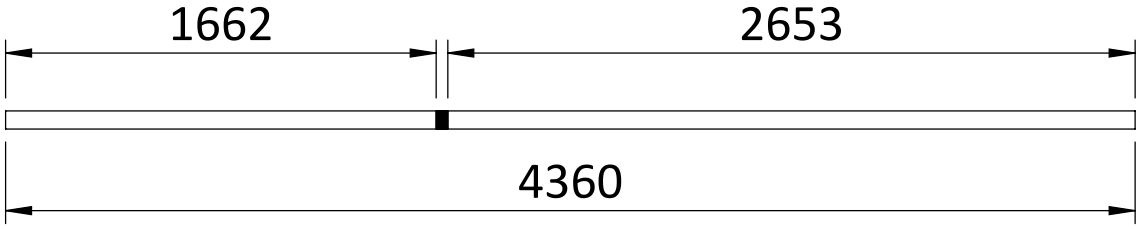  | x 1 | PT1-1662<br>+<br>PT1-2653 |

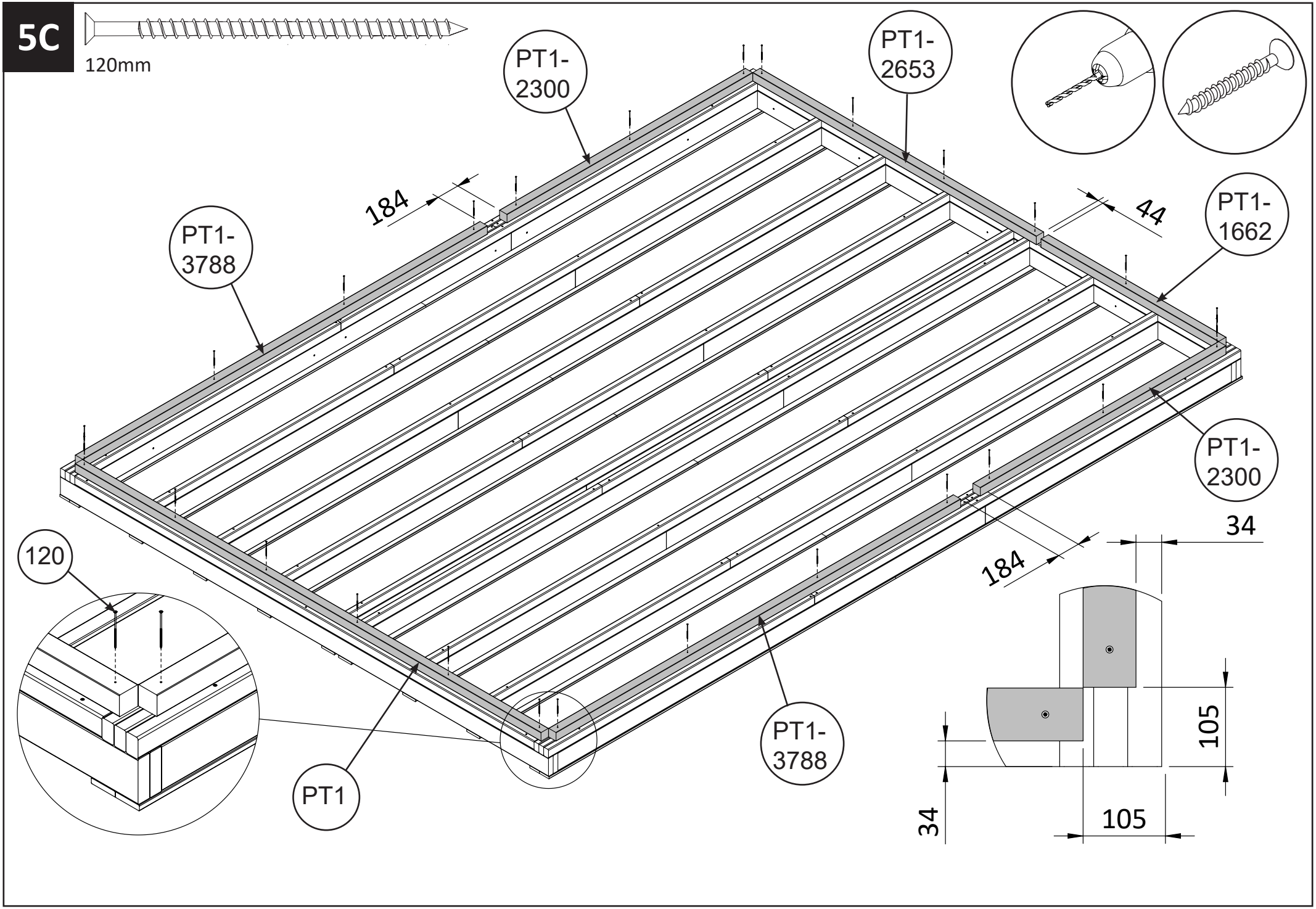
5C
120mm
PT1-2300
PT1-2653
PT1-3788
PT1-1662
PT1-2300
PT1-3788
PT1
184
44
184
120
34
105
34
105

# 6

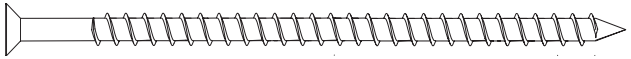

90mm

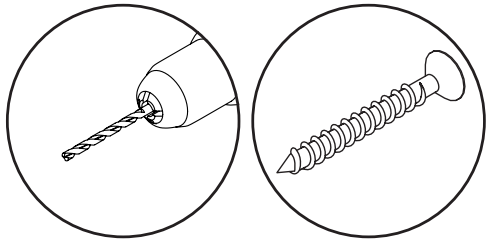

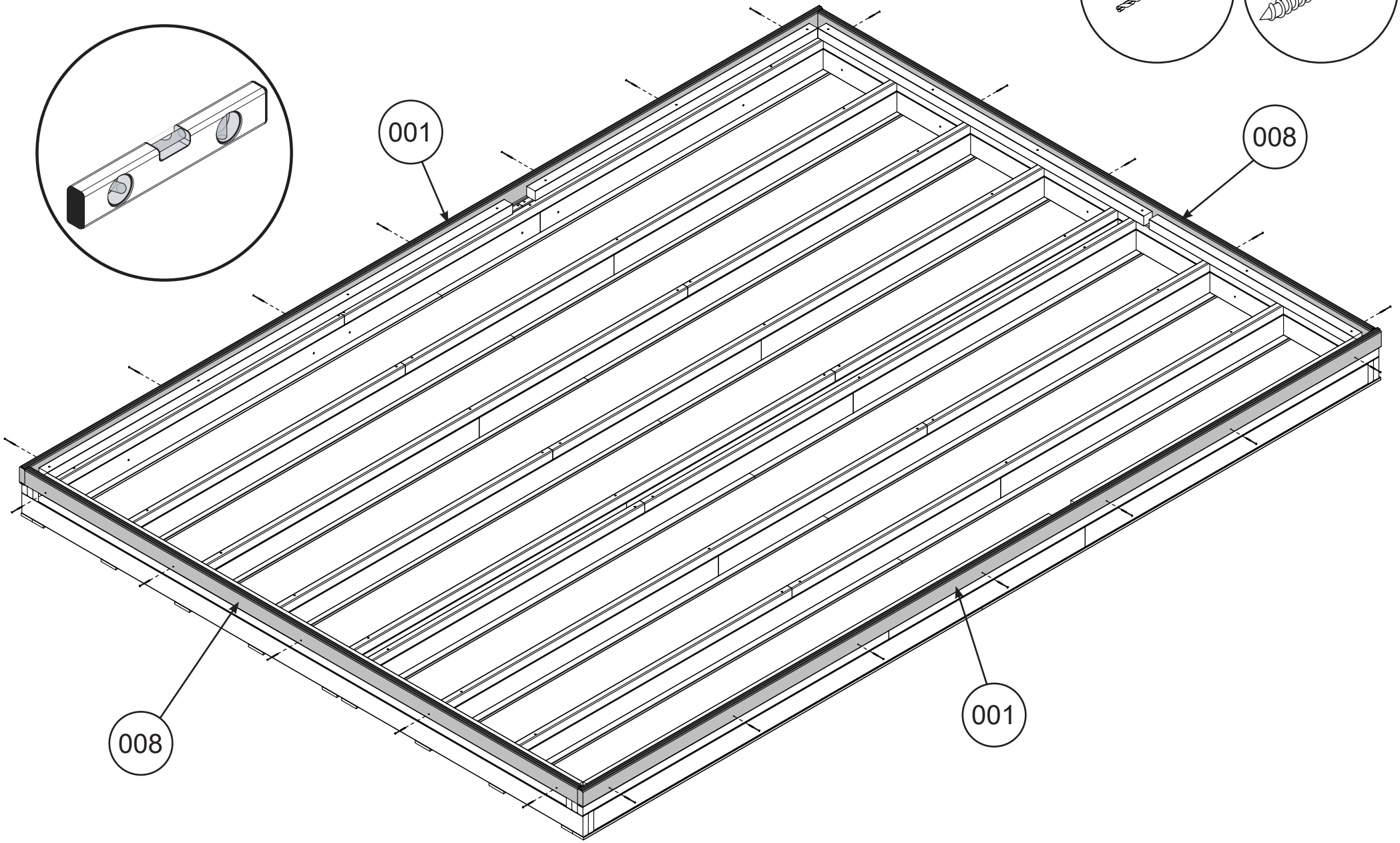

# 7

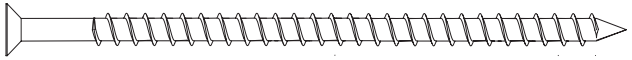

180mm

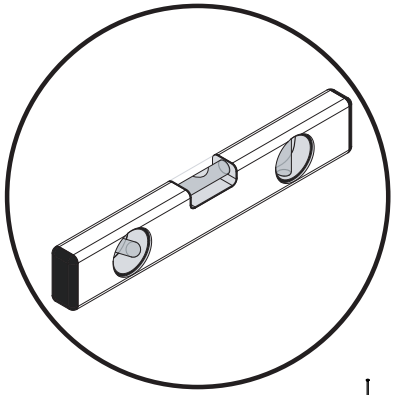

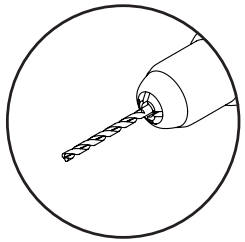

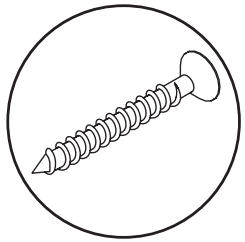

001

008

008

001

180

**8**

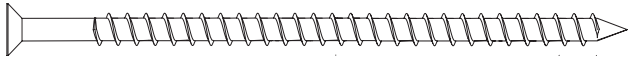

180mm

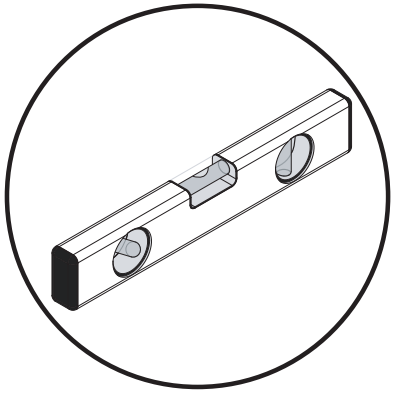

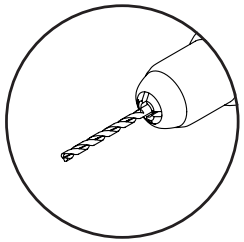

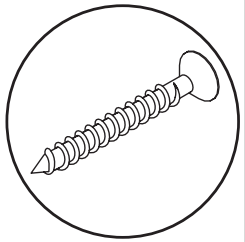

001

008

008

001

# 9

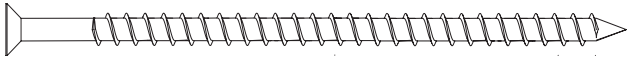

90mm





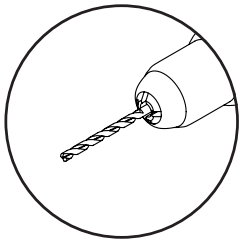

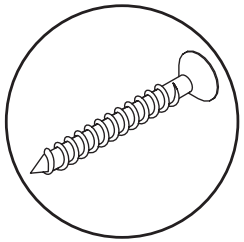

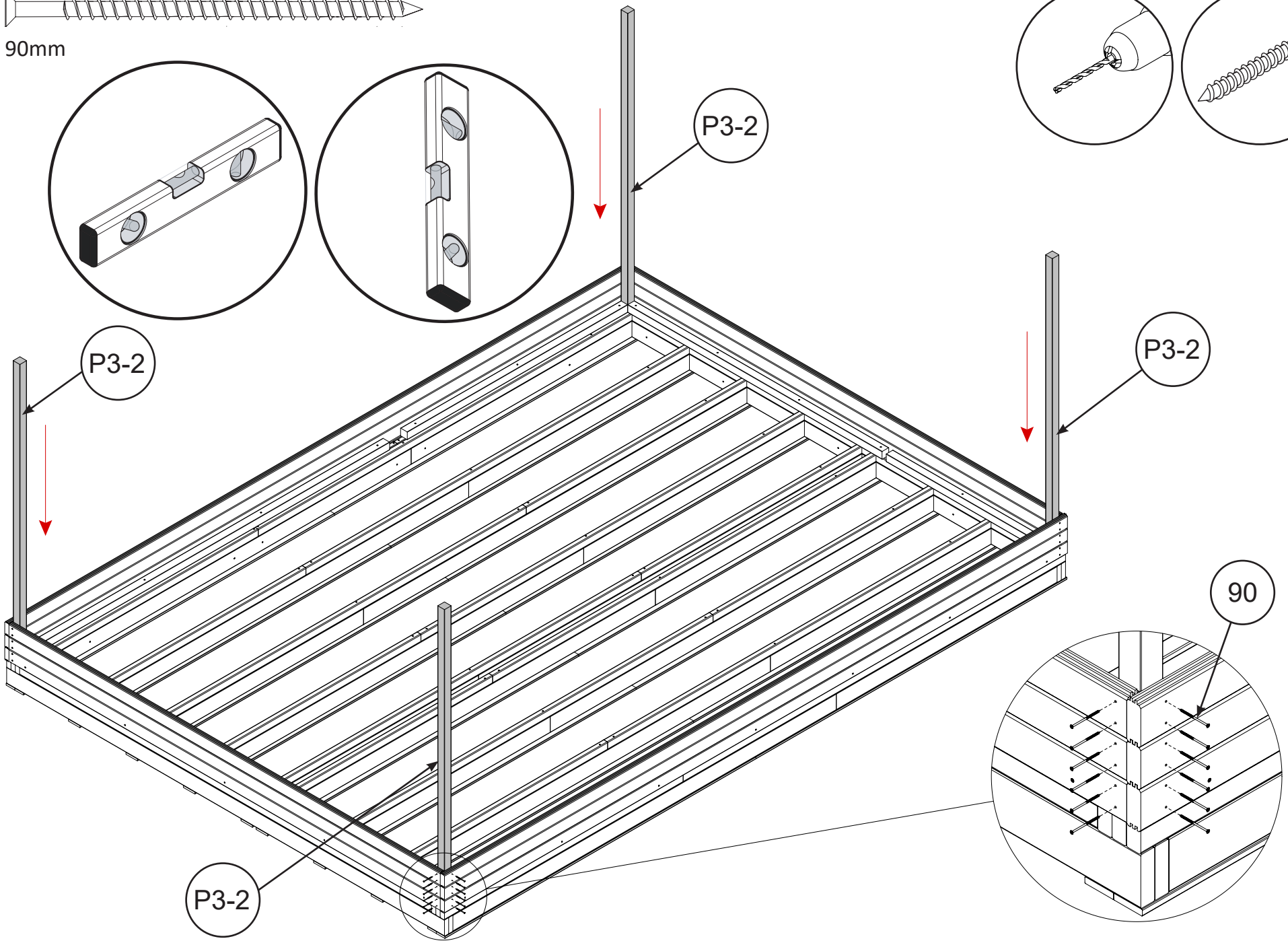

**10**

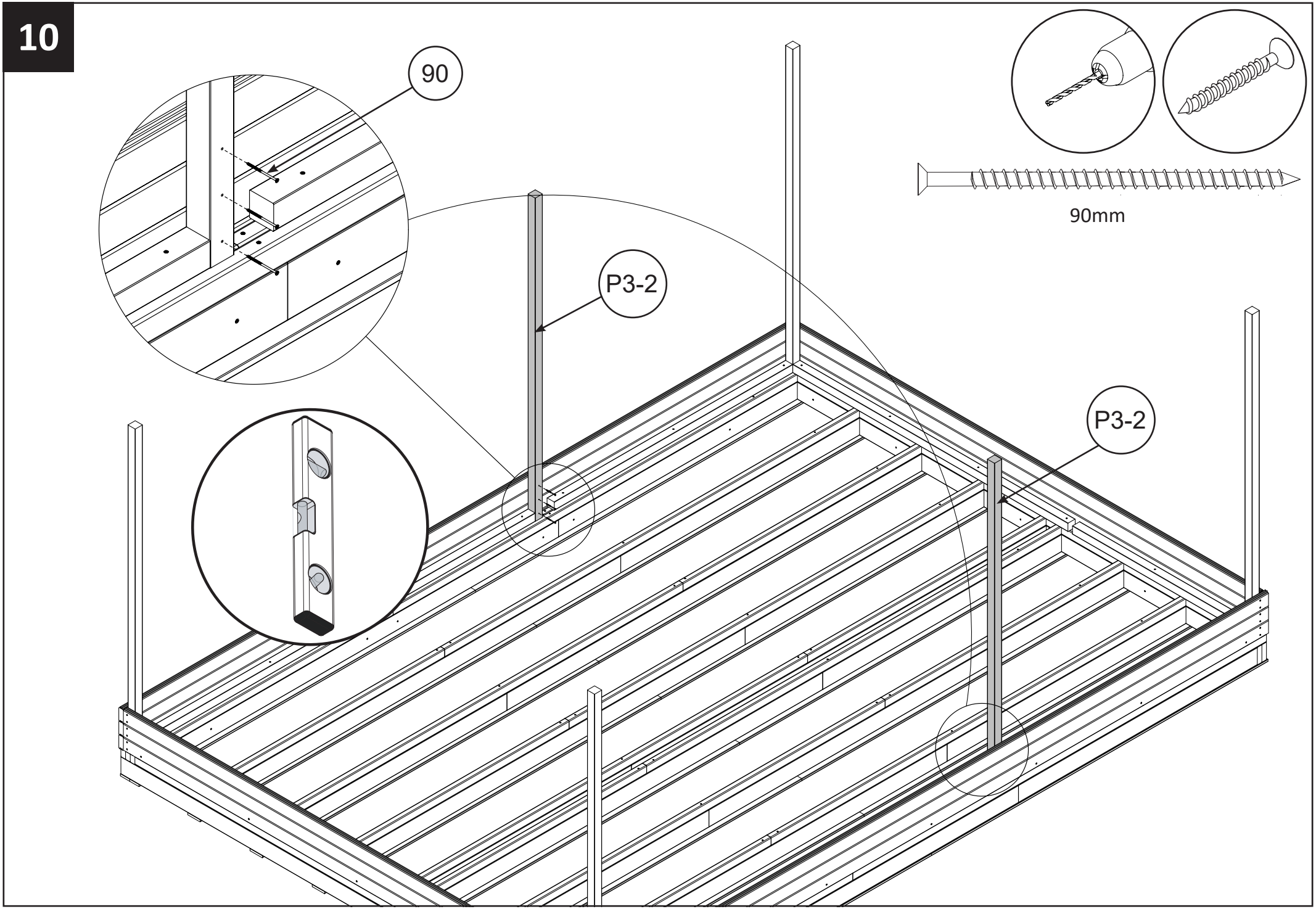

11



Nail

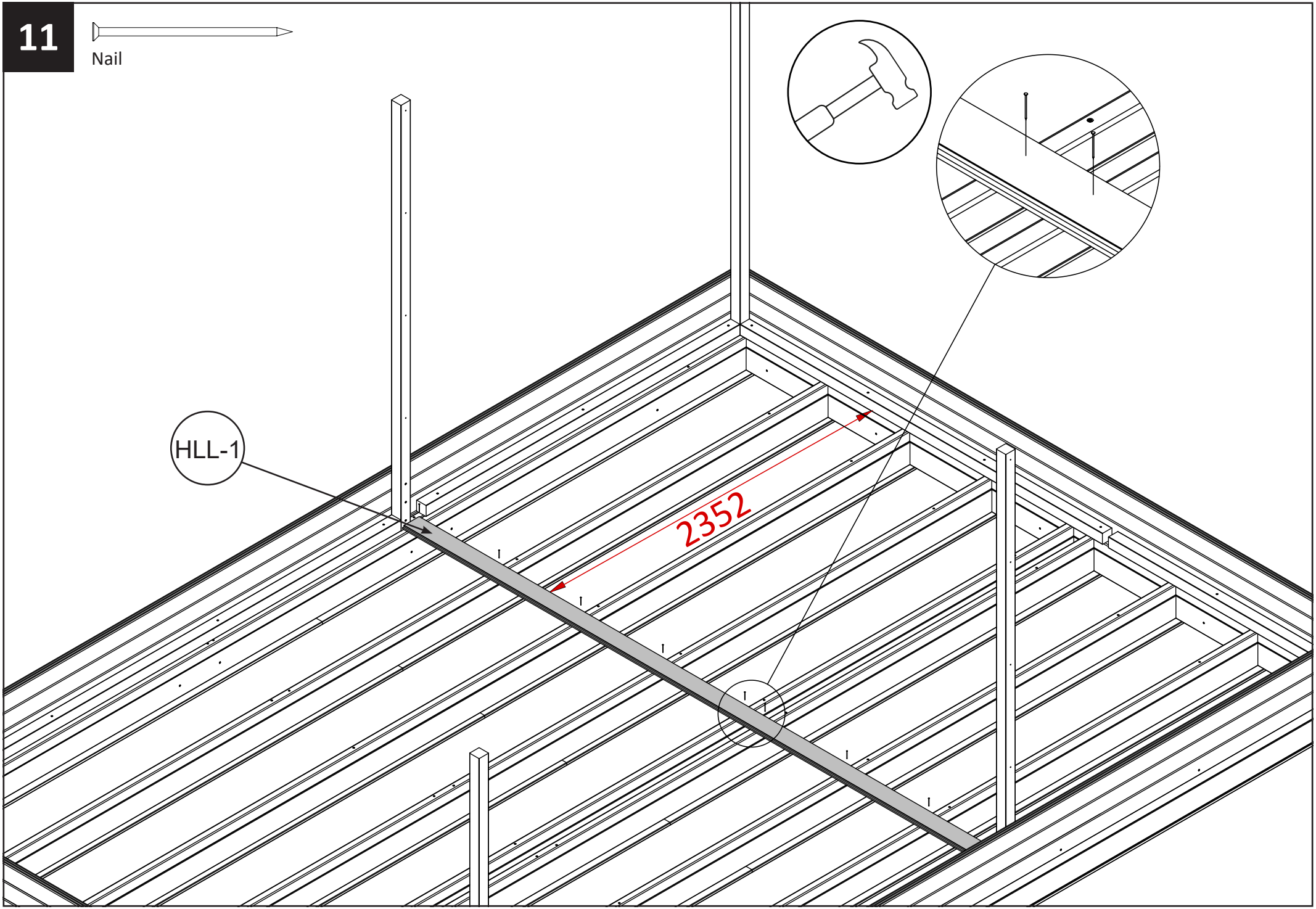

**12**




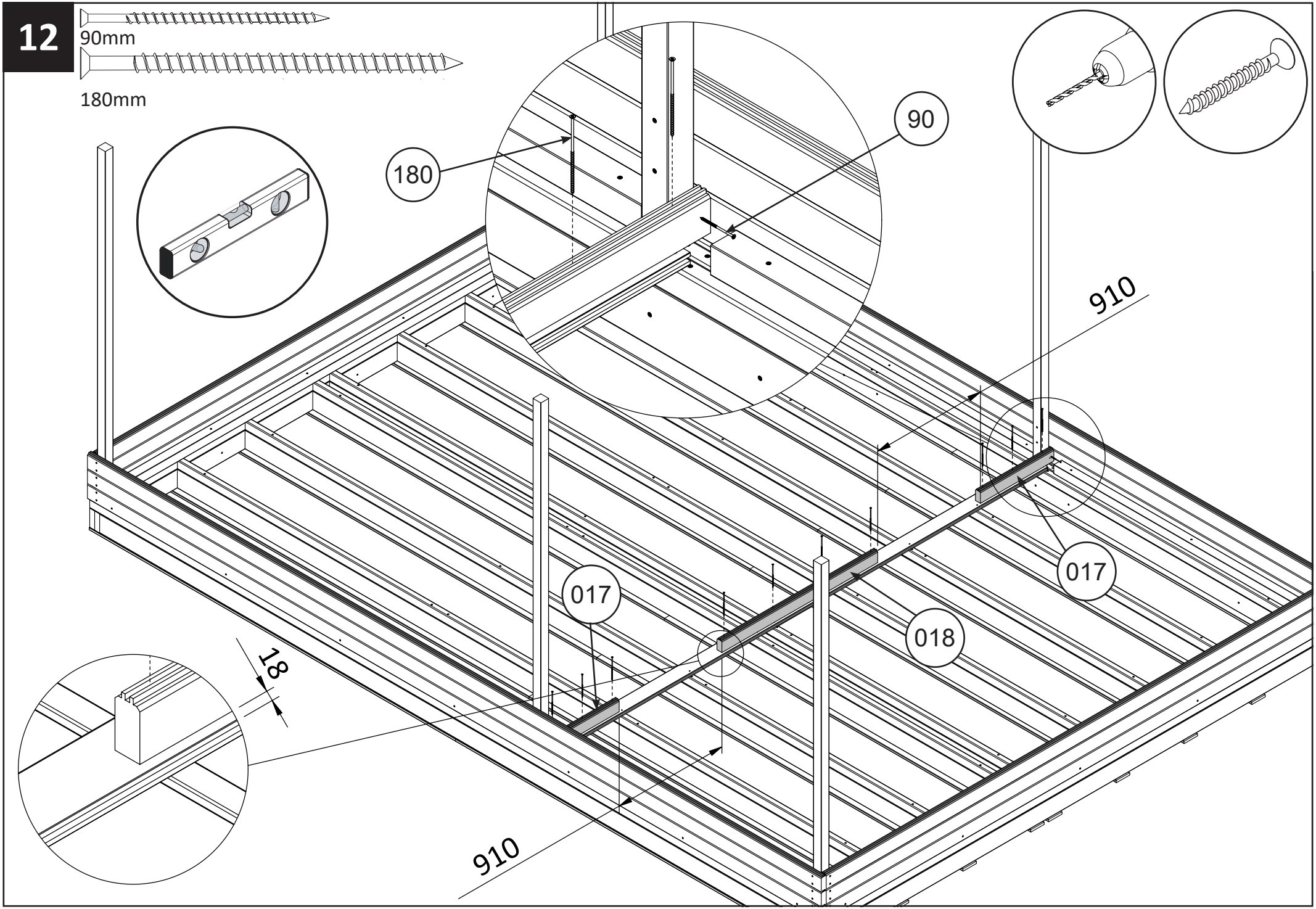

**13**




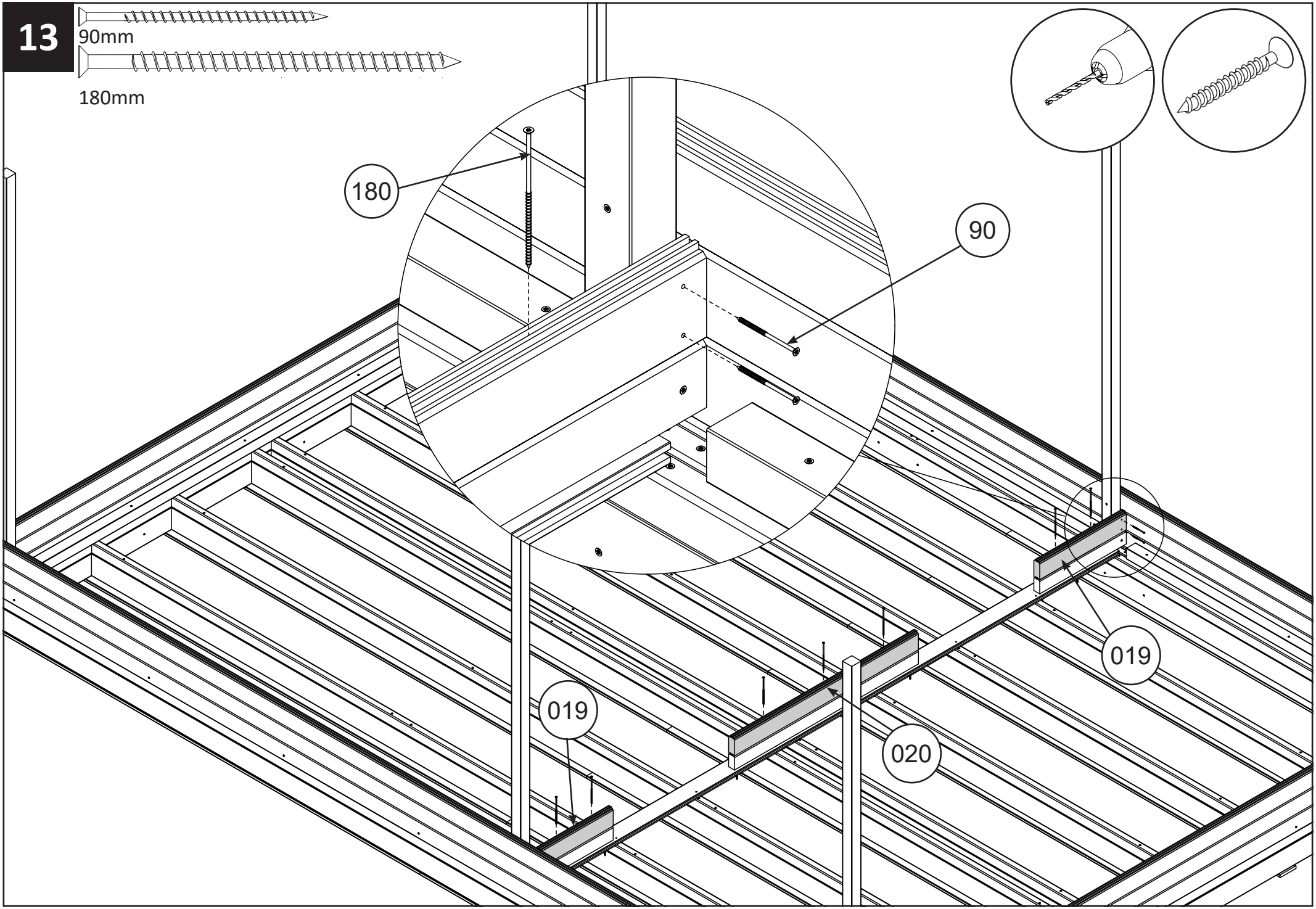

**14**

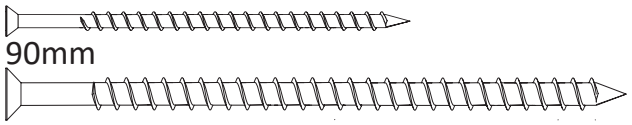


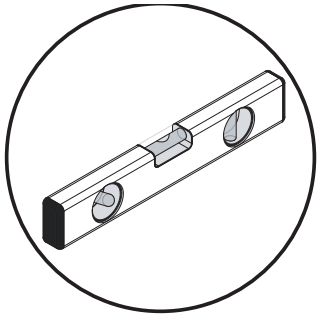

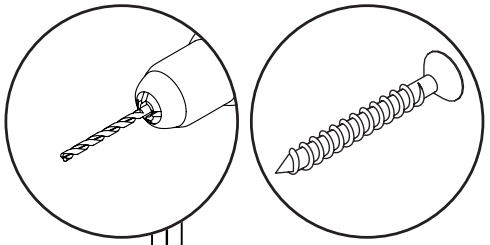

180

90

019

019

020

**15**

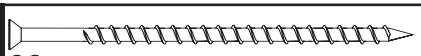

90mm

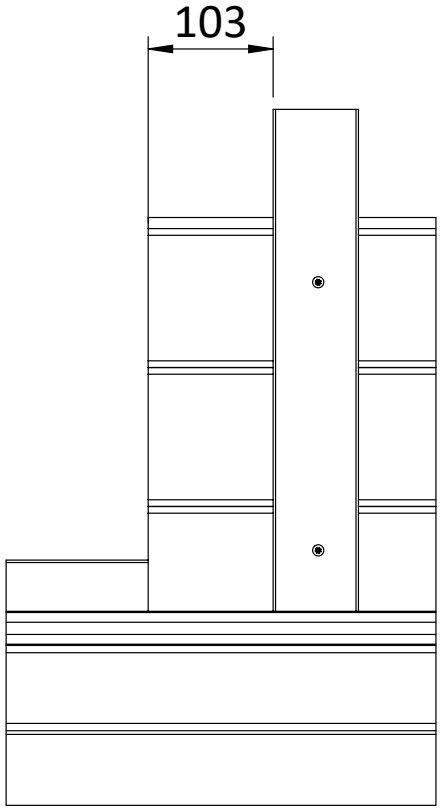


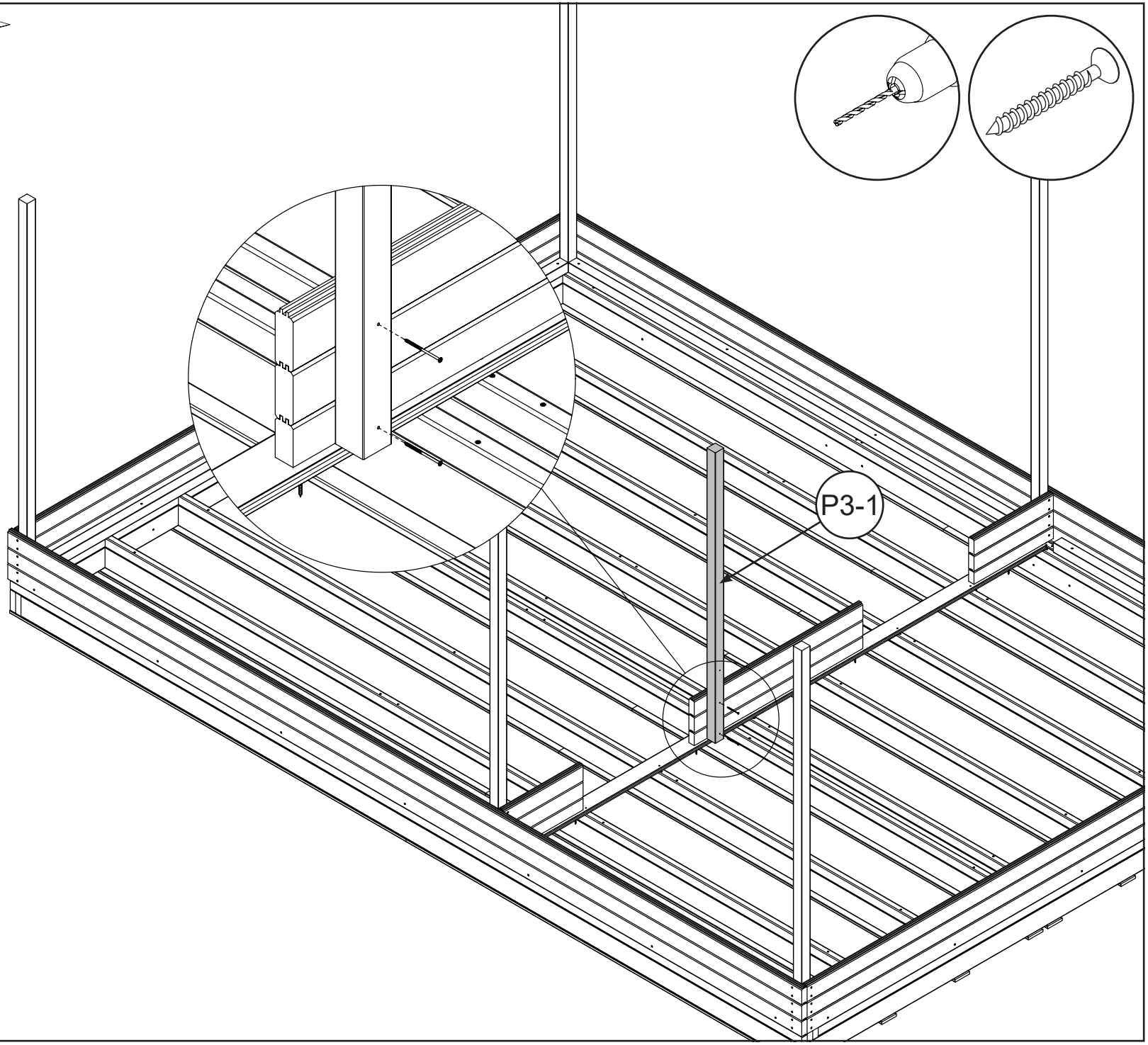

**16**



90mm

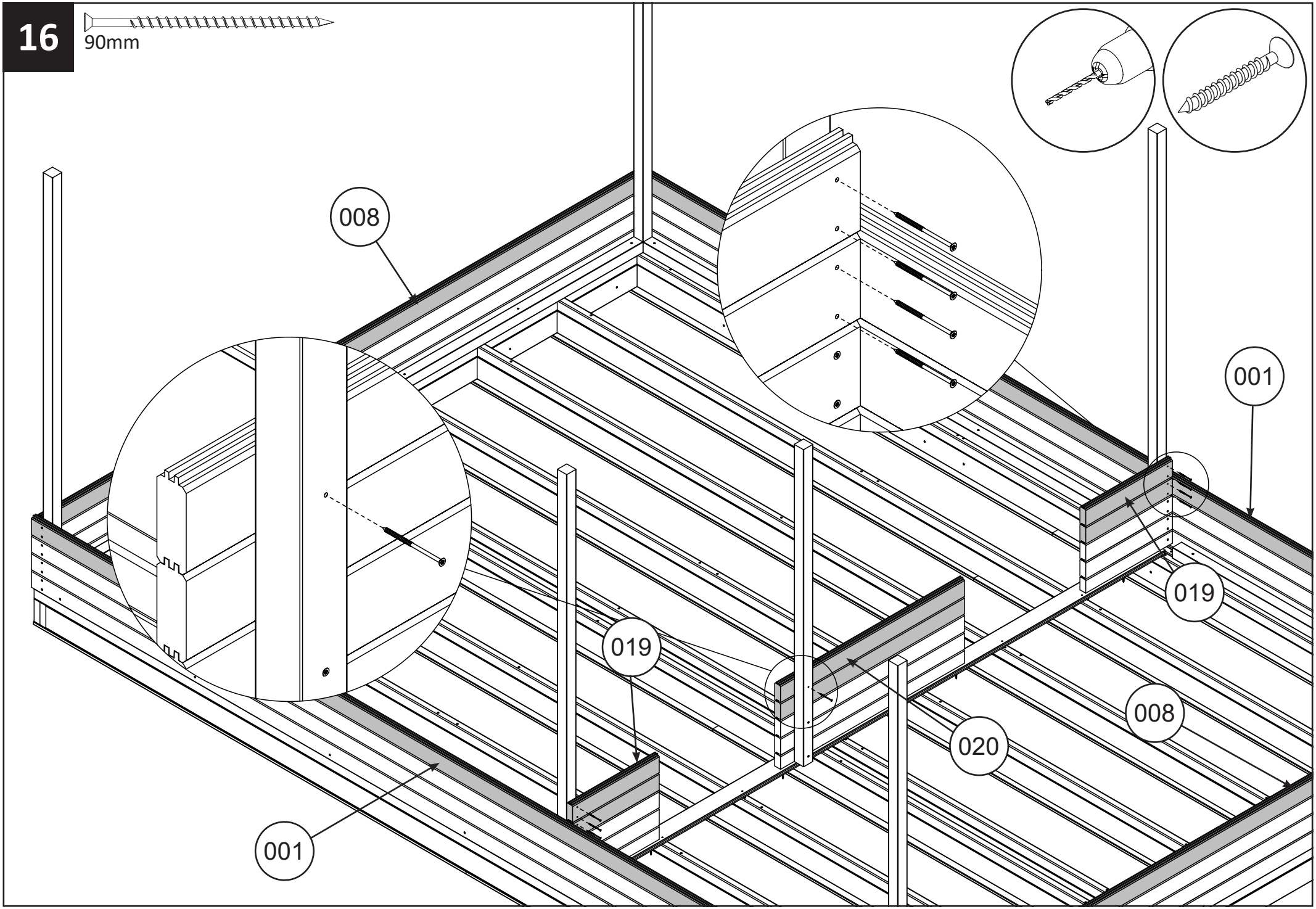

**17**



90mm

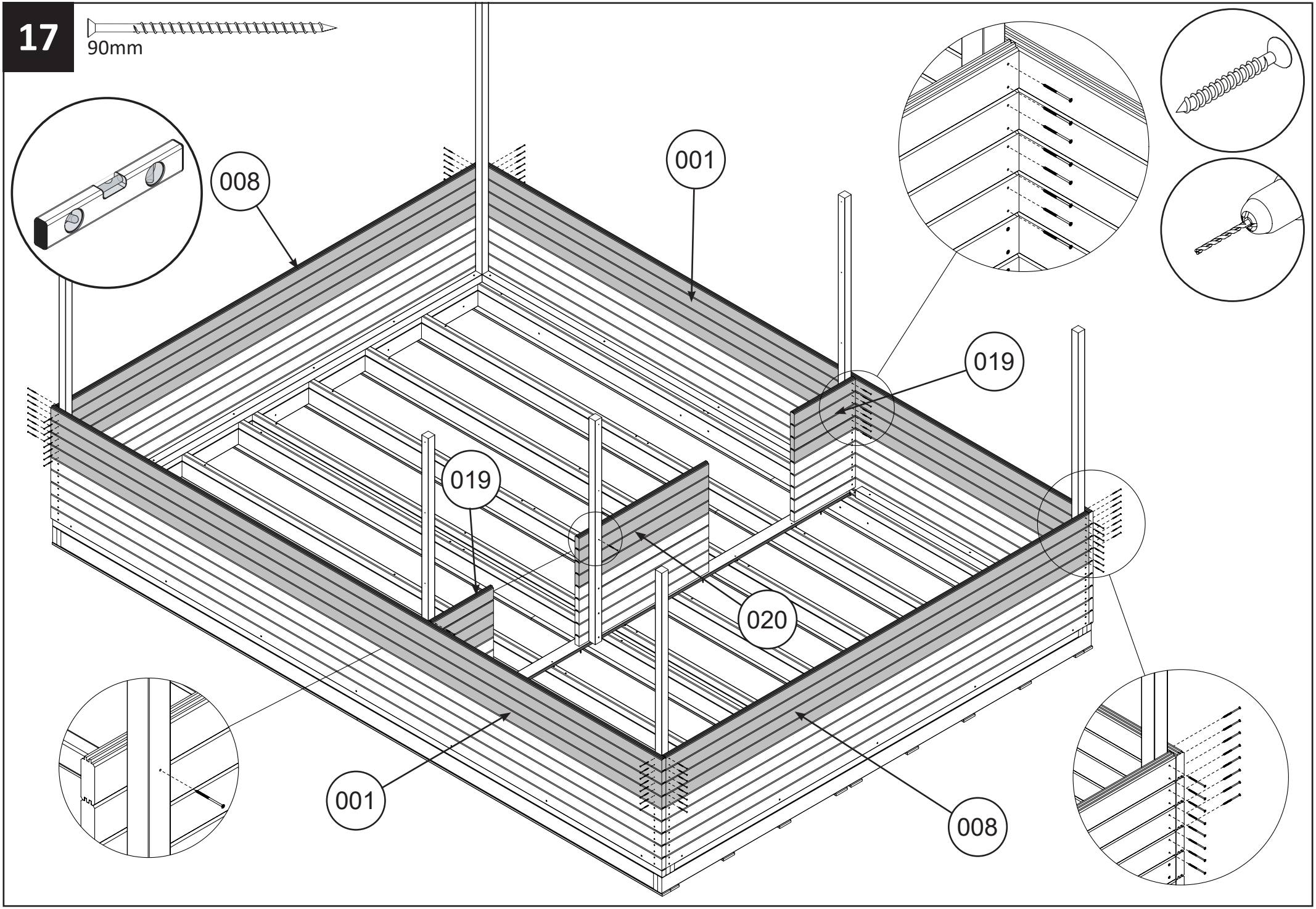

**18**



90mm

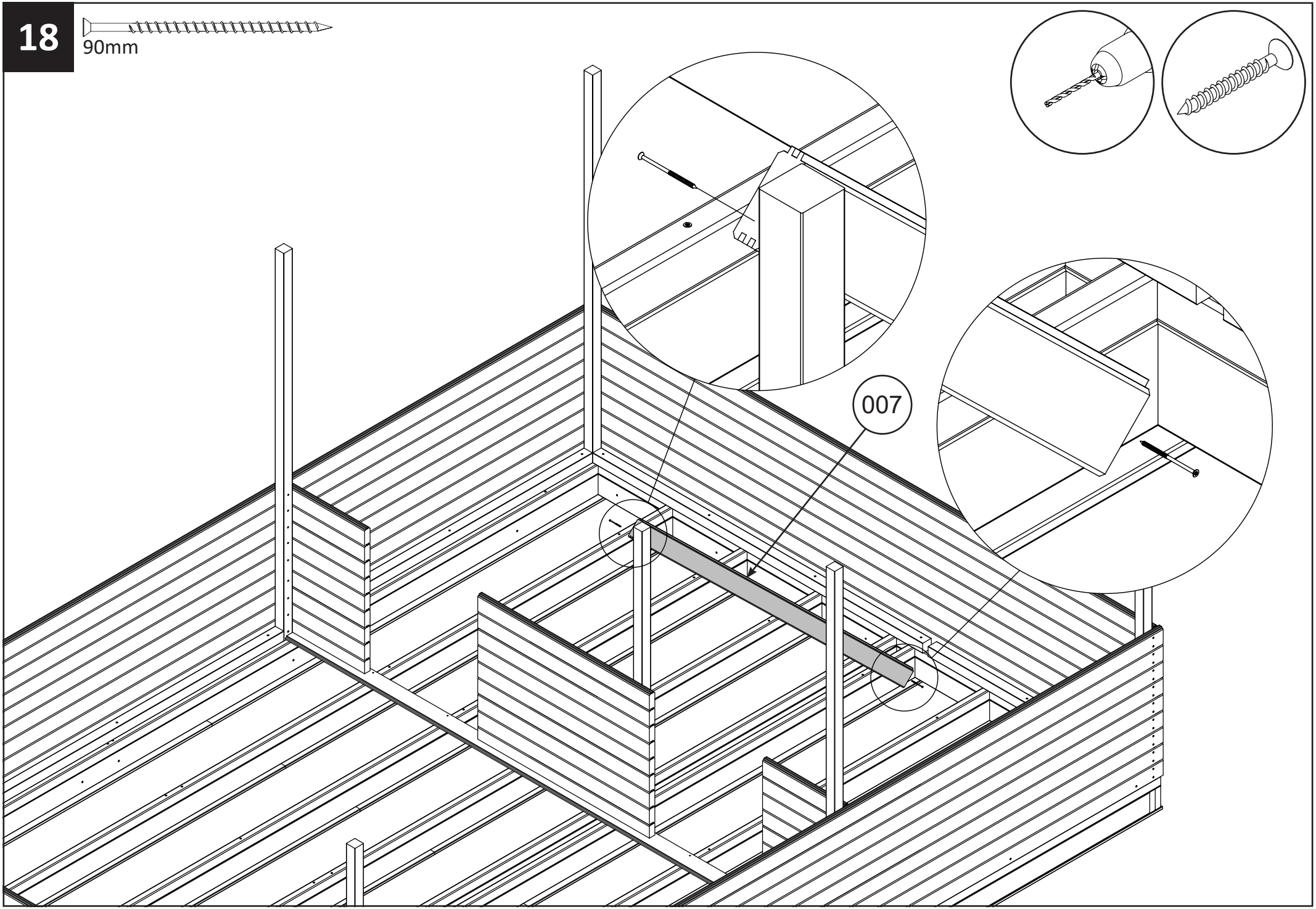

**19**

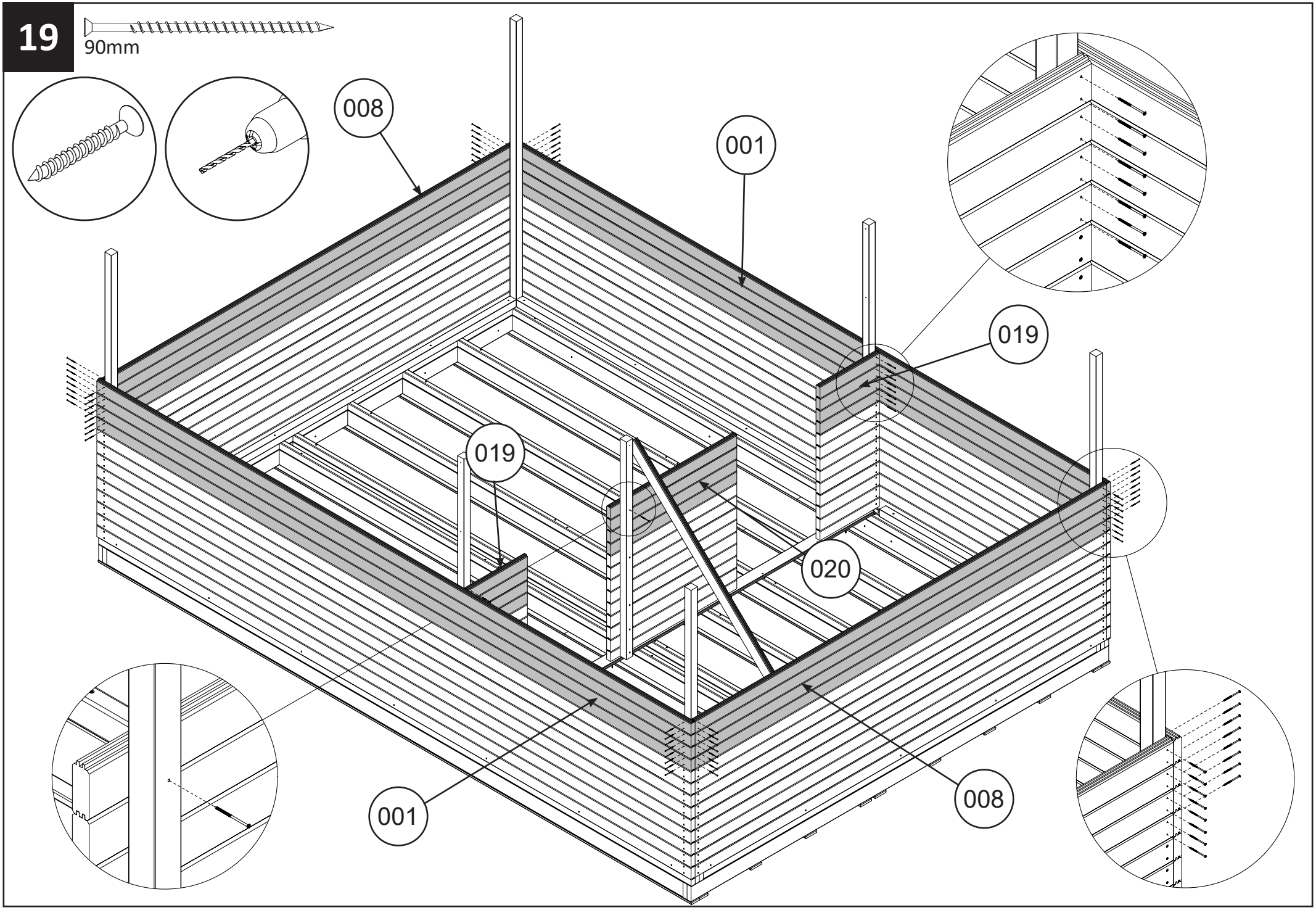

**20**

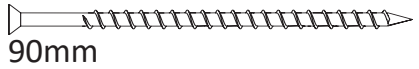


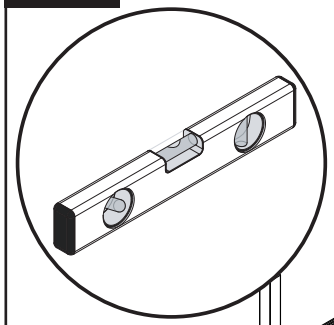

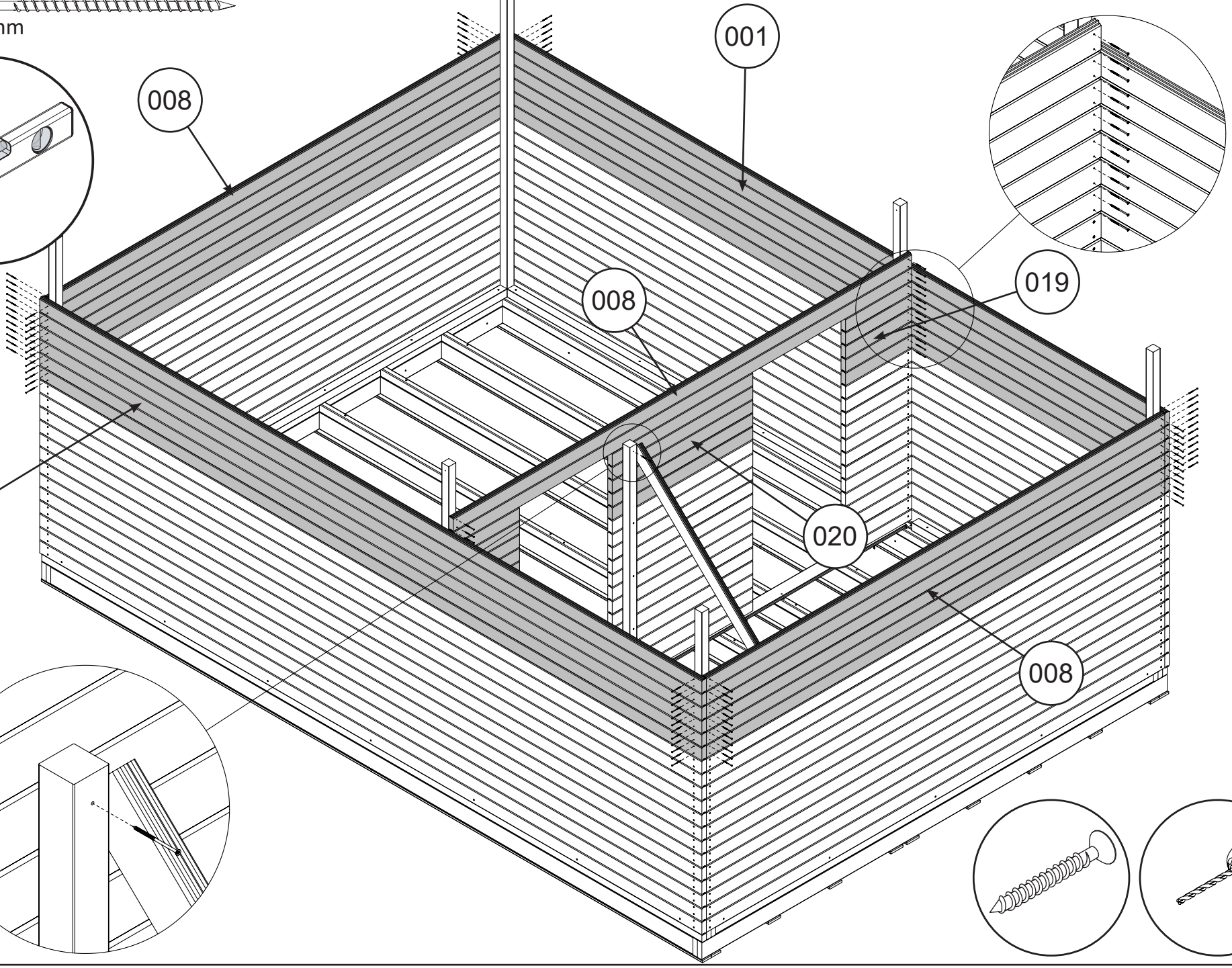

# 21-A DIM

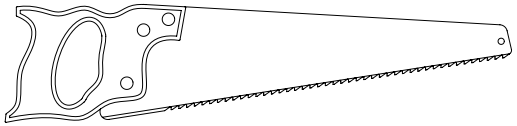

| WALL | Pos-* | USE ITEM | CUT | QTY | NEW IDENT |
|---|---|---|---|---|---|
| W3 | 1 | VT1 | 2653 / 1662 / 4360 | x 1 | VT1-2653 + VT1-1662 |
| | 2 | VT1 | 2113 / 2202 / 4360 | x 1 | VT1-2113 + VT1-2202 |
| | 3 | VT1 | 1662 / 2653 / 4360 | x 1 | VT1-1662 + VT1-2653 |

# 21-A

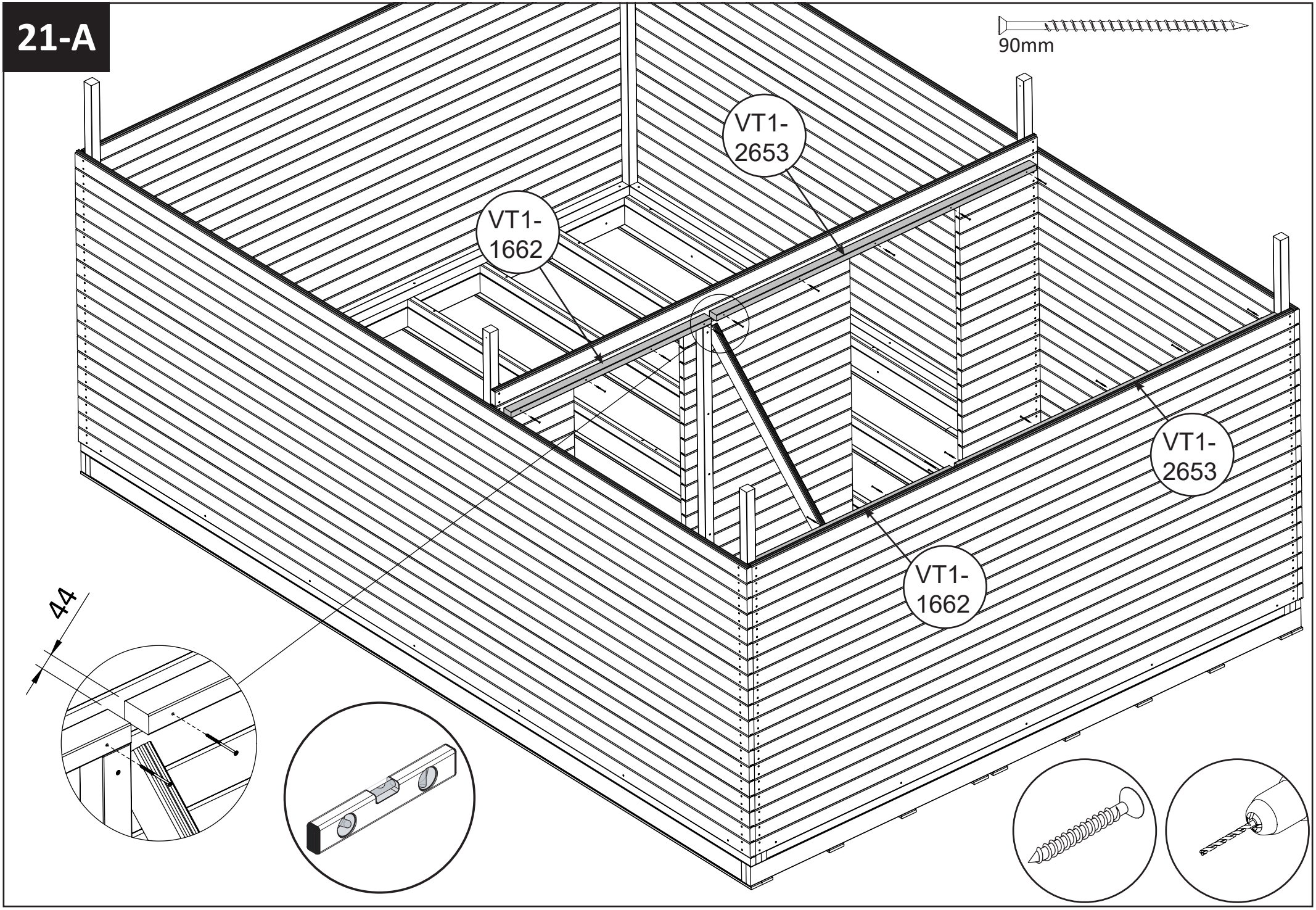

# 21-A DIM

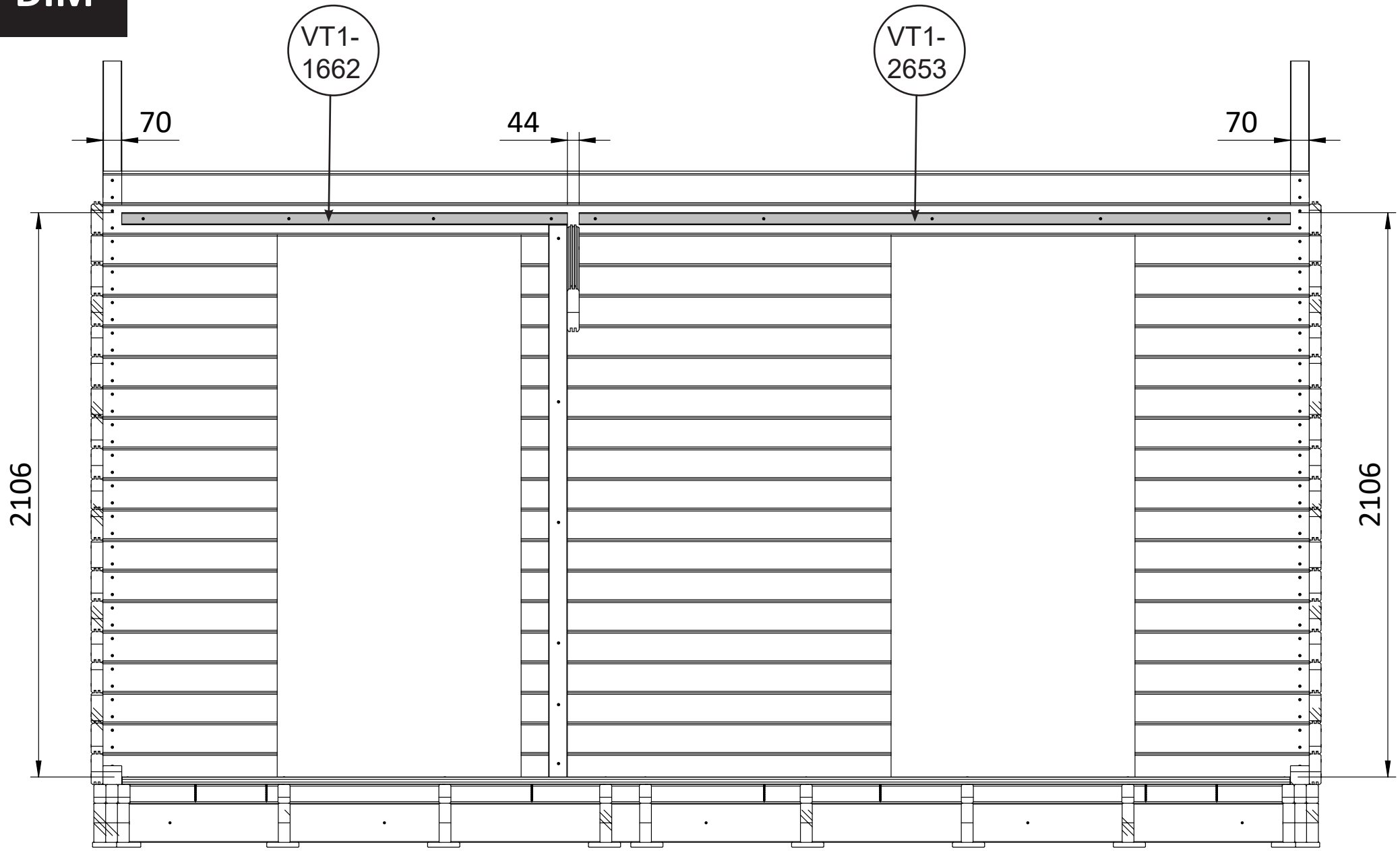

# 21-B

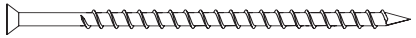




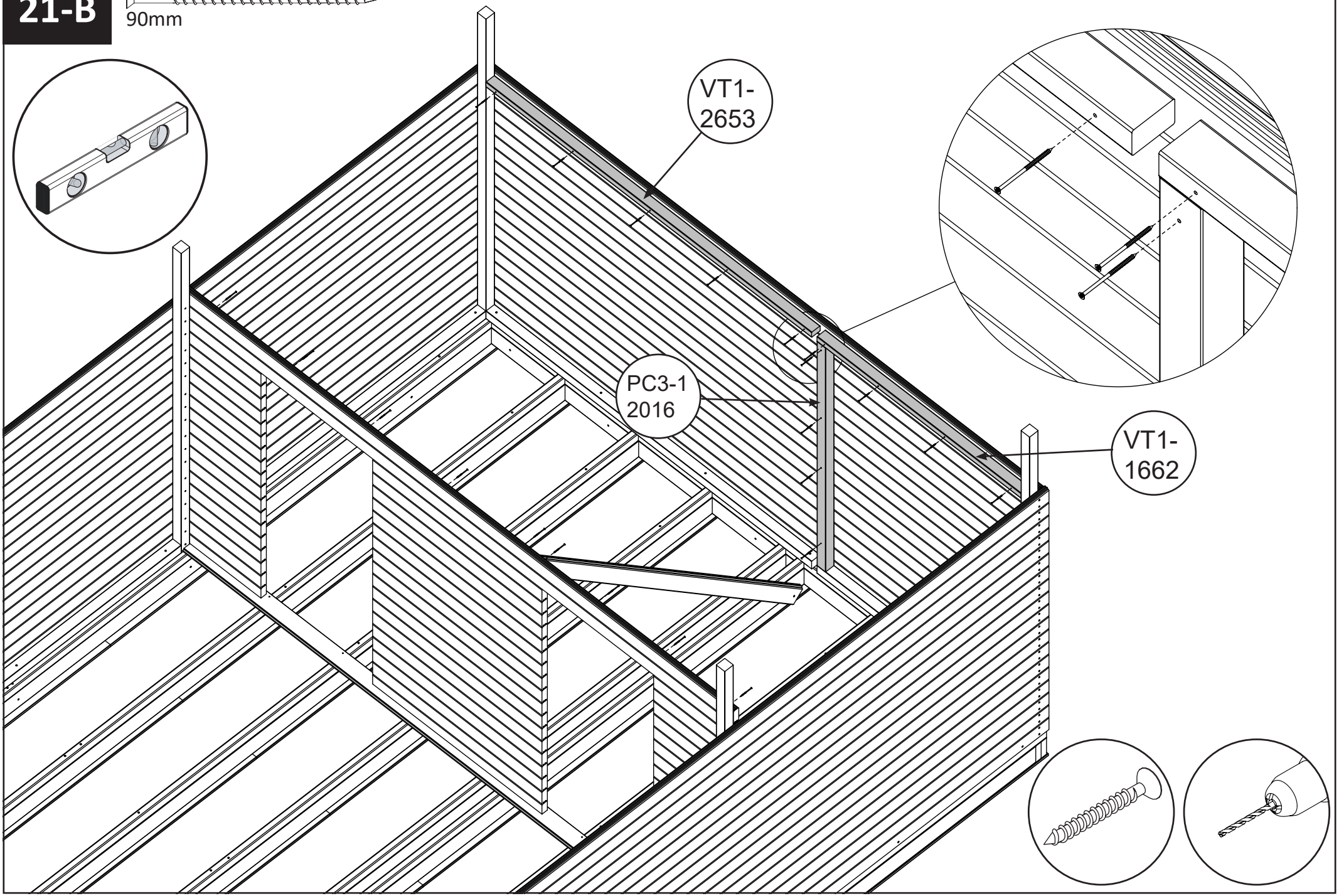

# 21-B DIM

| USE ITEM | CUT | QTY | NEW IDENT |
|---|---|---|---|
| PC3-1 | 2016 | x 1 | PC3-1-2016 |

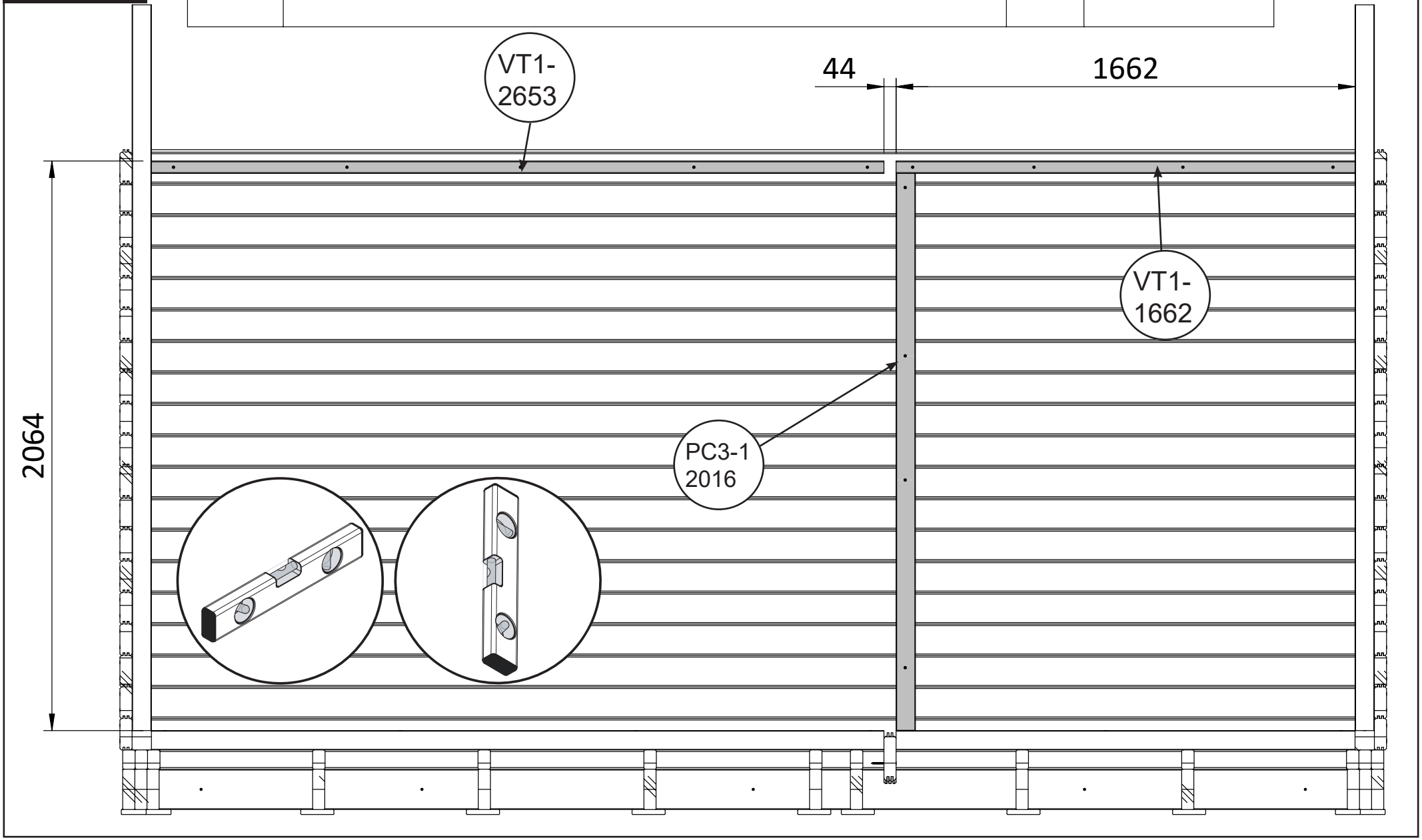

# 22
# CUT

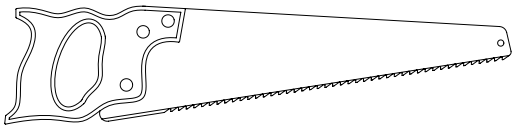

| WALL | GROUNDPLAN | USE ITEM | CUT | QTY | NEW IDENT |
|---|---|---|---|---|---|
| WC | 1 | VT2 | 3039 | x 9 | VT2 |
| | 2 | VT2 | 2440<br>3039 | x 9 | VT2-2440 |
| | 3 | VT2 | 1841<br>3039 | x 9 | VT2-1841 |

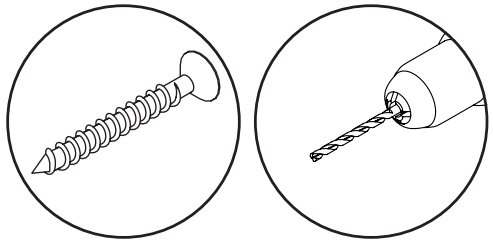

90mm

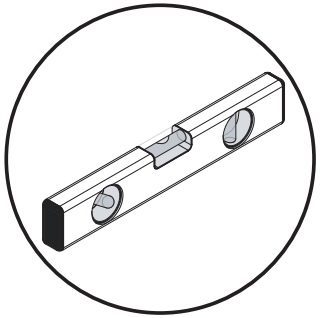

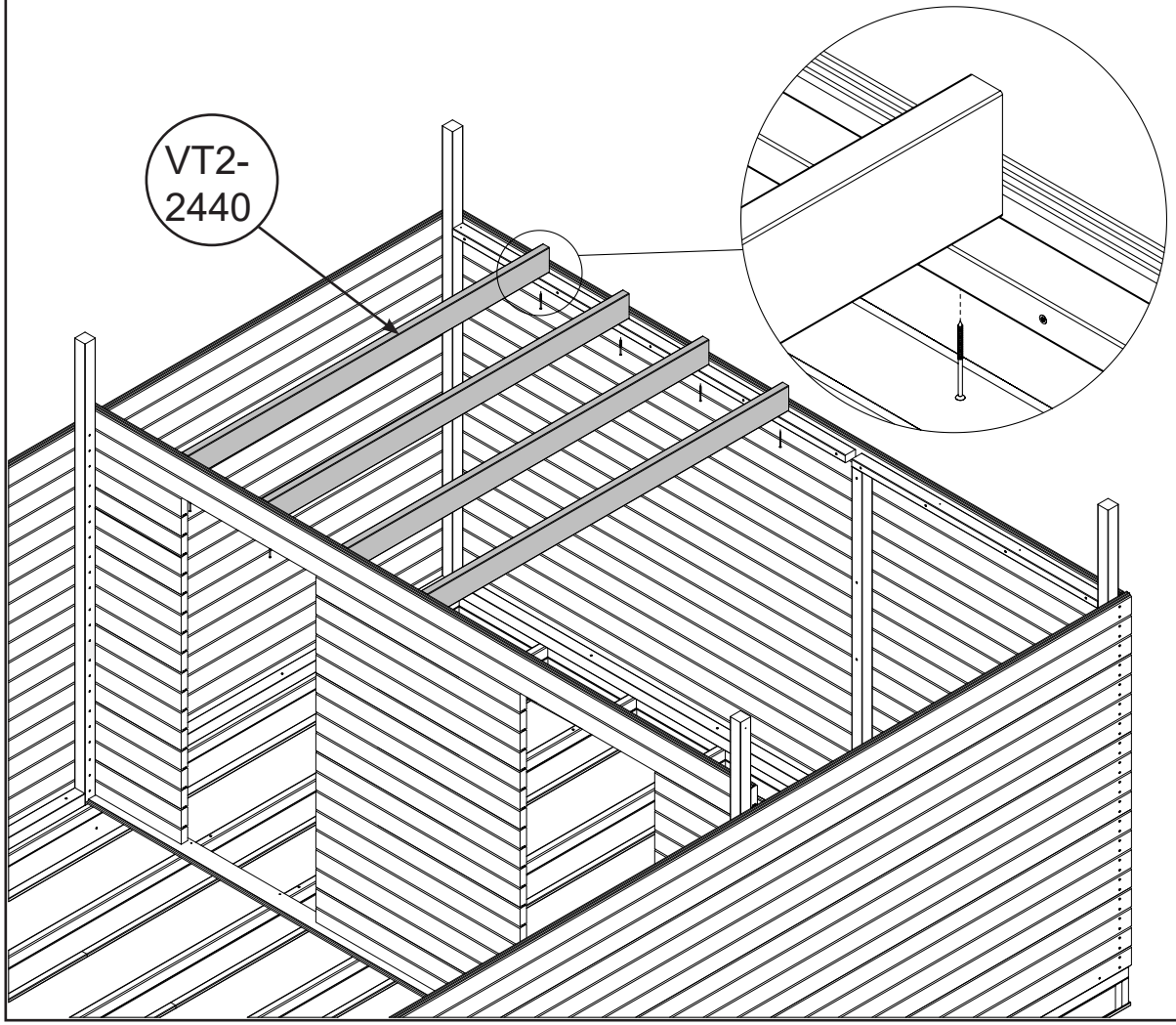


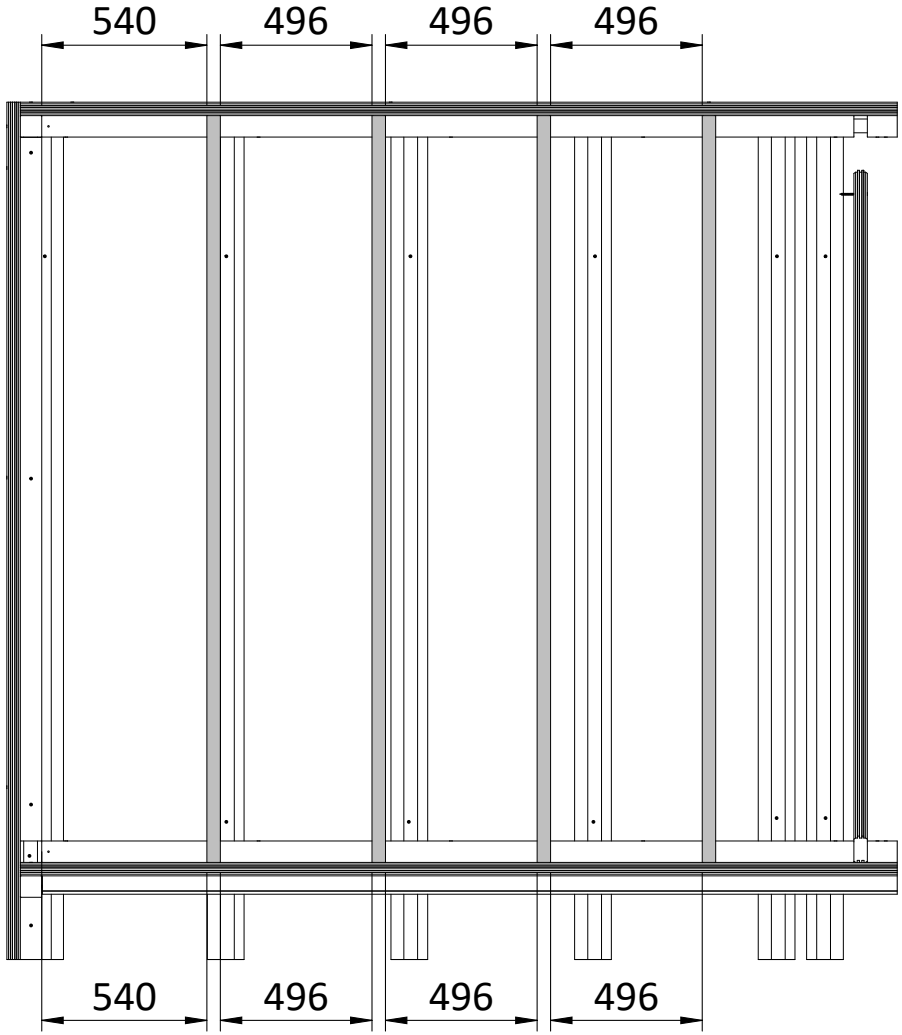

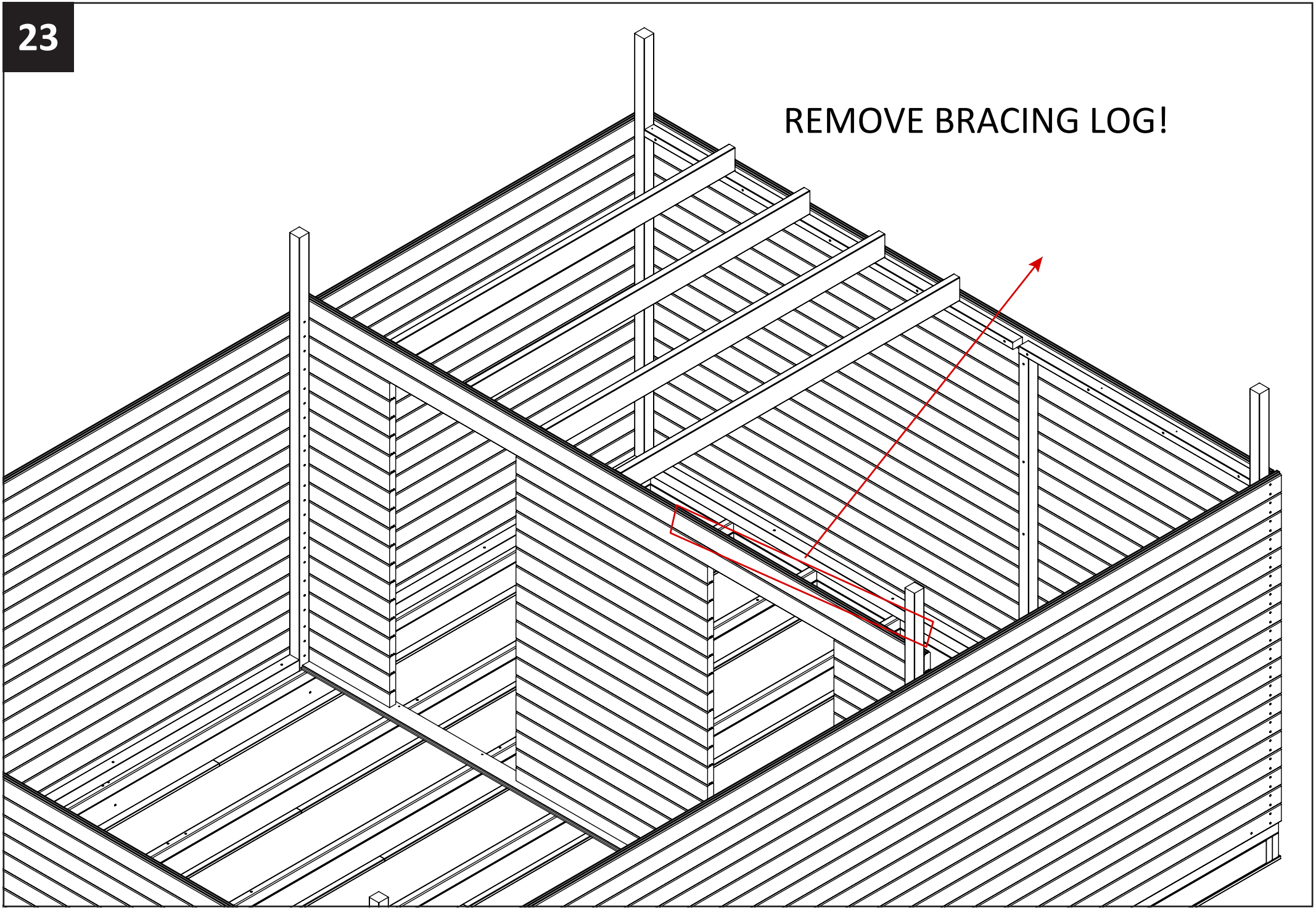
REMOVE BRACING LOG!

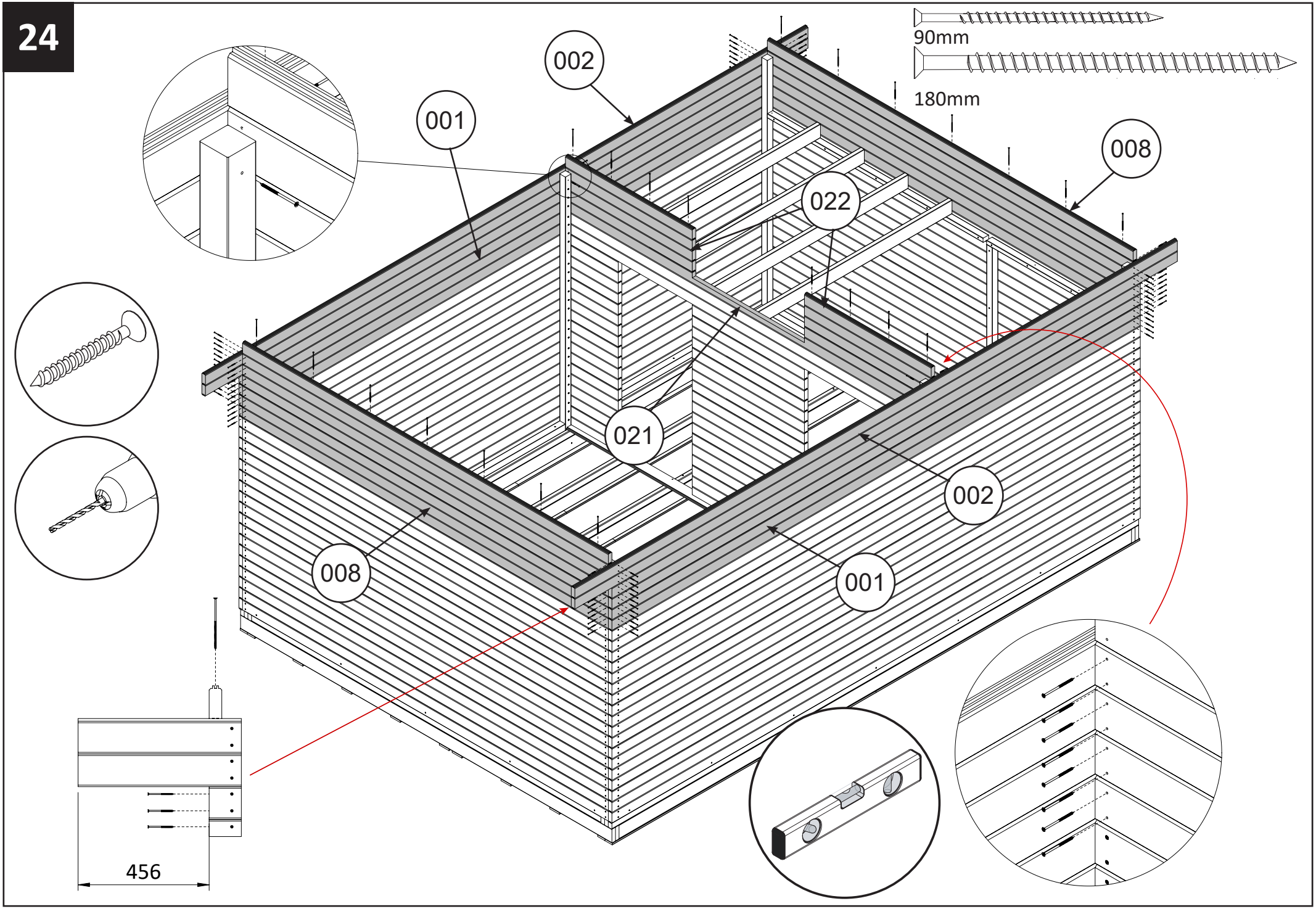
90mm
180mm
002
001
008
022
021
002
008
001
456

**25**

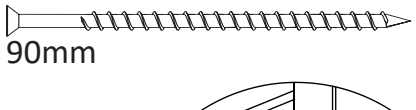


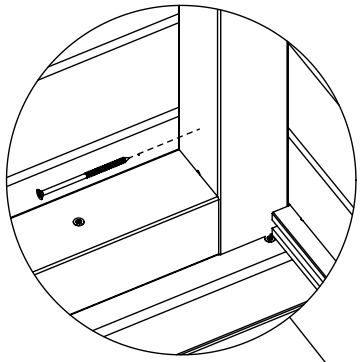





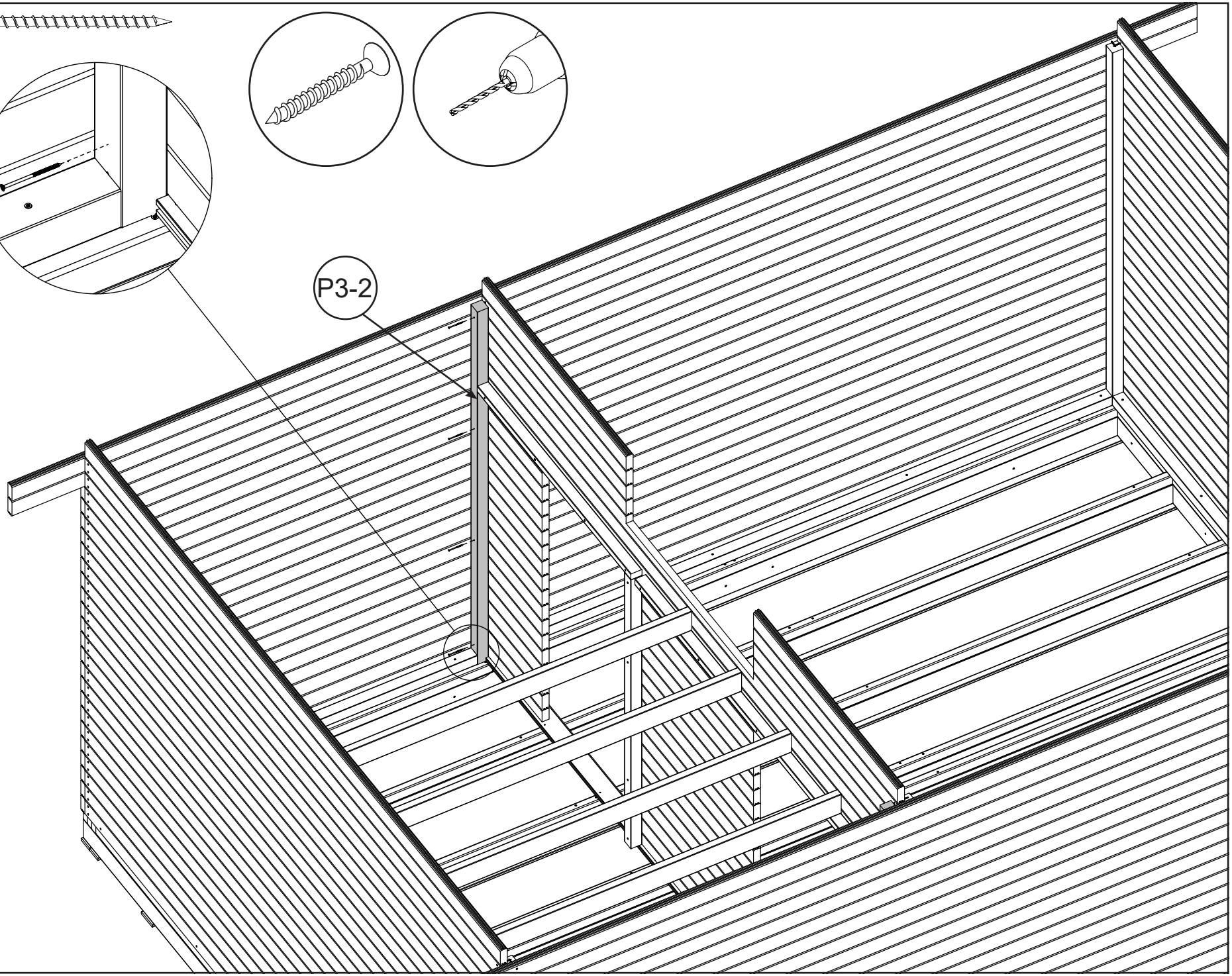

# 26
# CUT

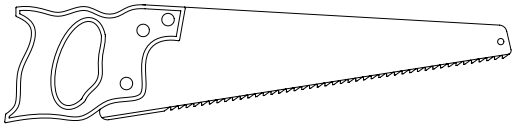

| WALL | GROUNDPLAN | USE ITEM | CUT | QTY | NEW IDENT |
|---|---|---|---|---|---|
| WC | 1 | PT2 | 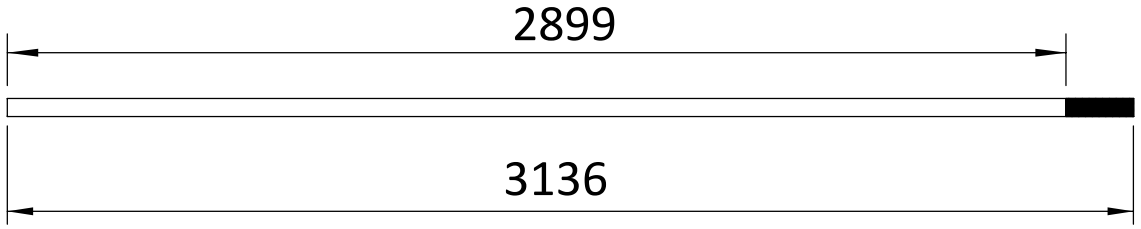  | x 2 | PT2-2899 |
| | 2 | PT2 | 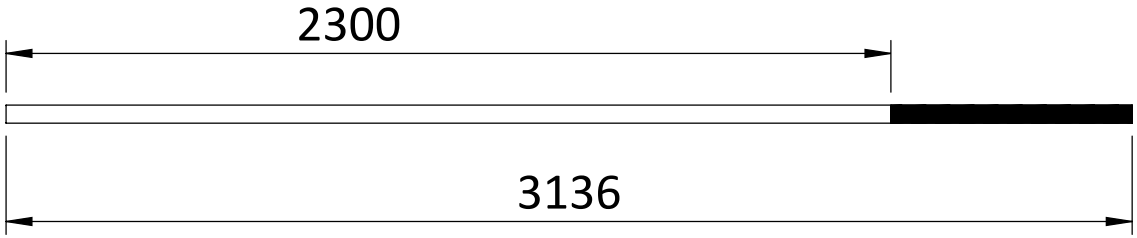  | x 2 | PT2-2300 |
| | 3 | PT2 | 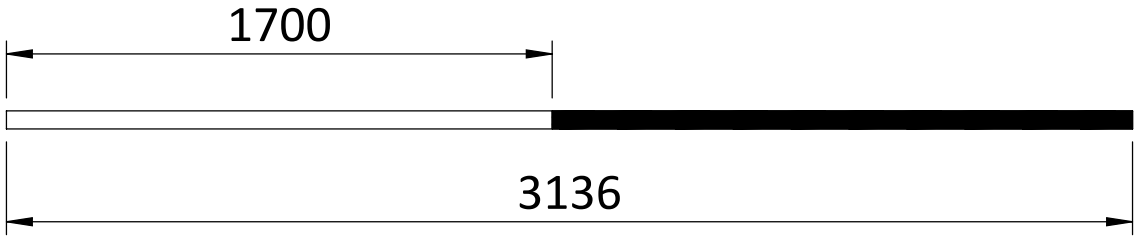  | x 2 | PT2-1700 |

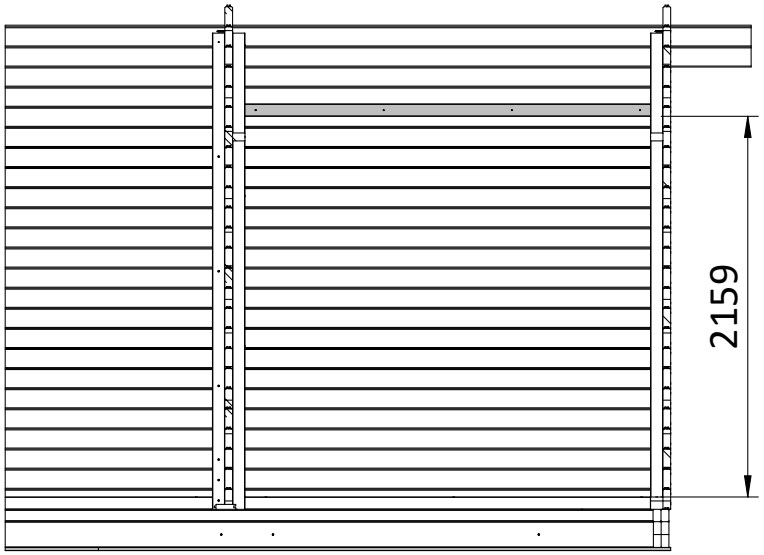
2159

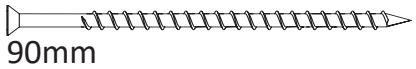
90mm

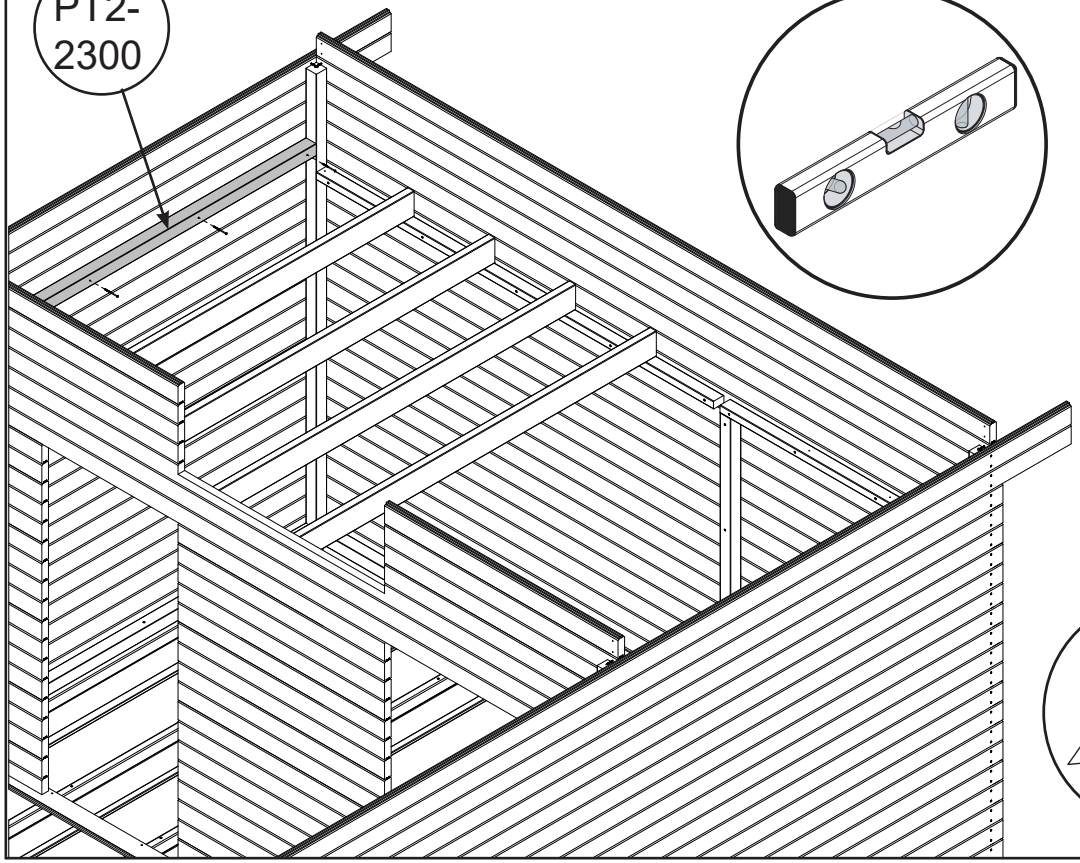
PT2-
2300



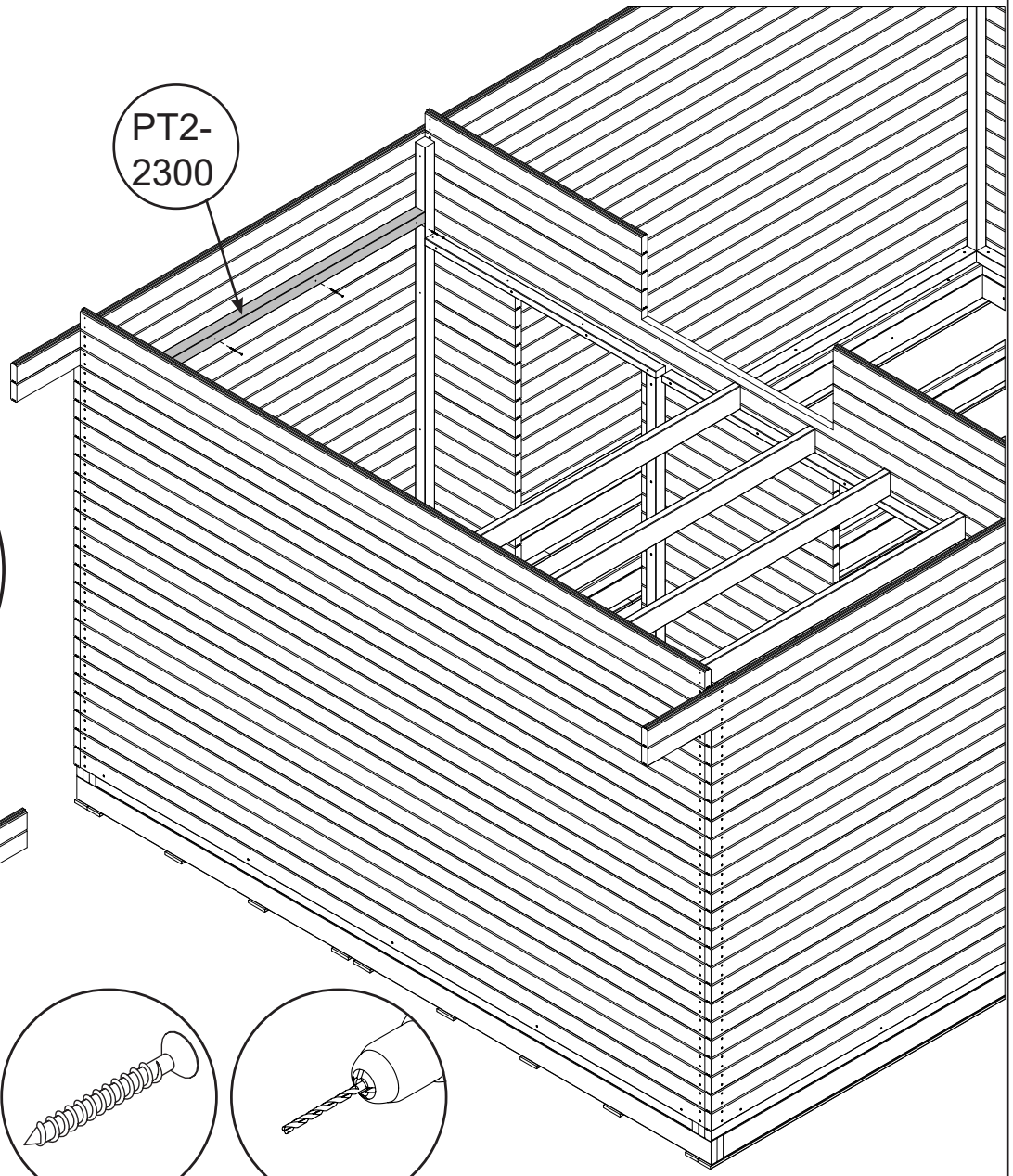
PT2-
2300

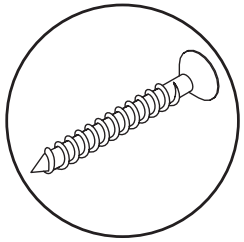

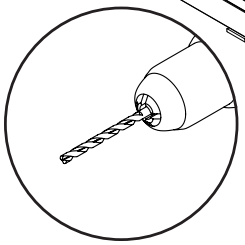

27

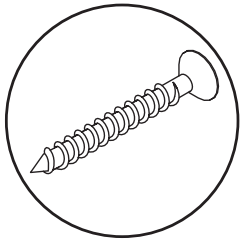

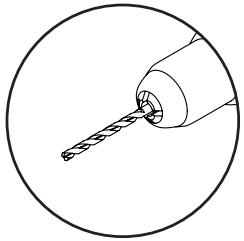

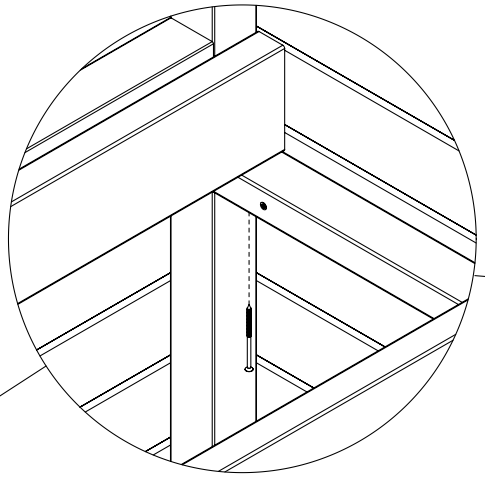

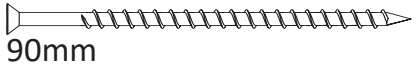


VT2-2440

VT2-2440

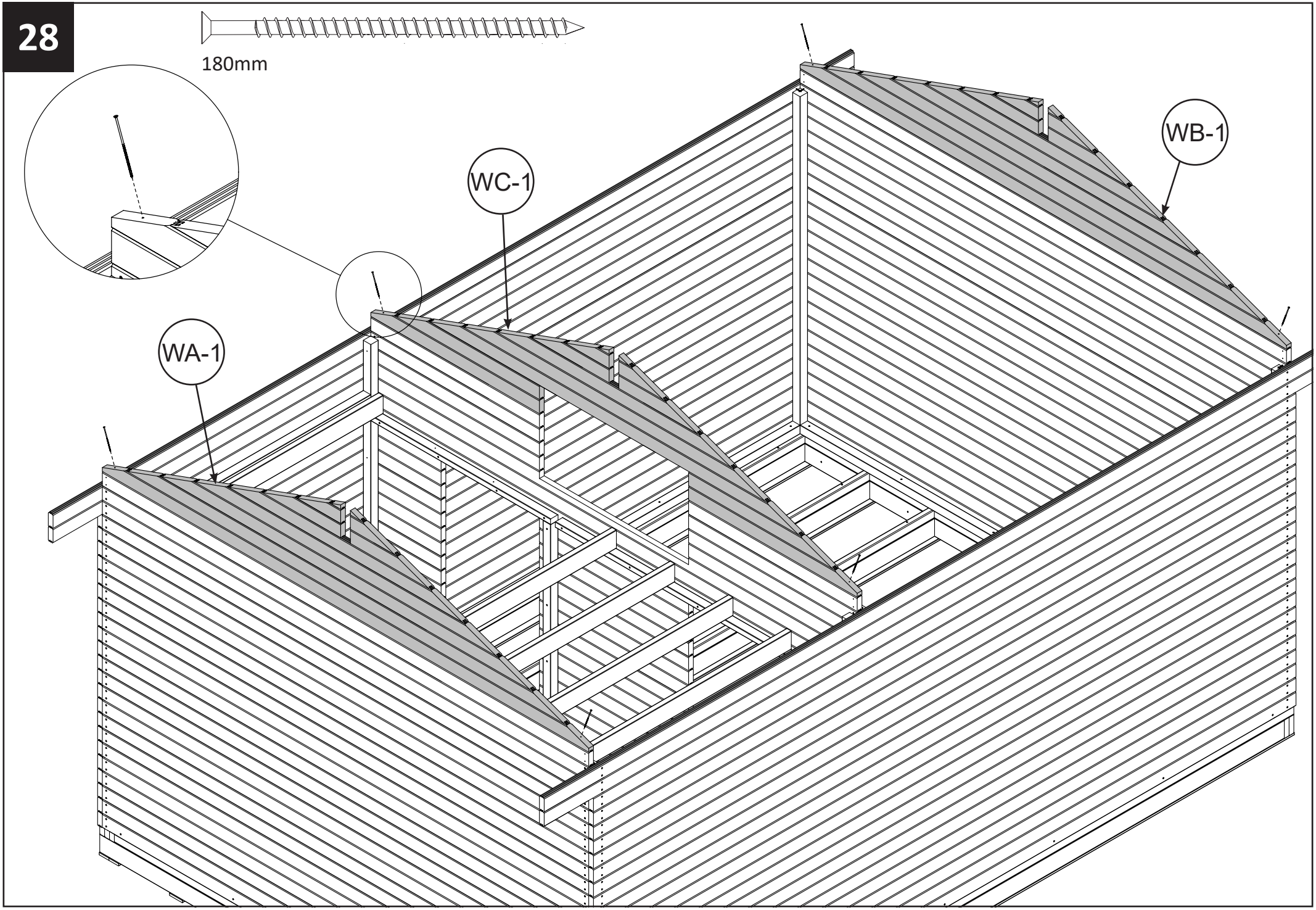
180mm
WA-1
WC-1
WB-1

# 29-DIM

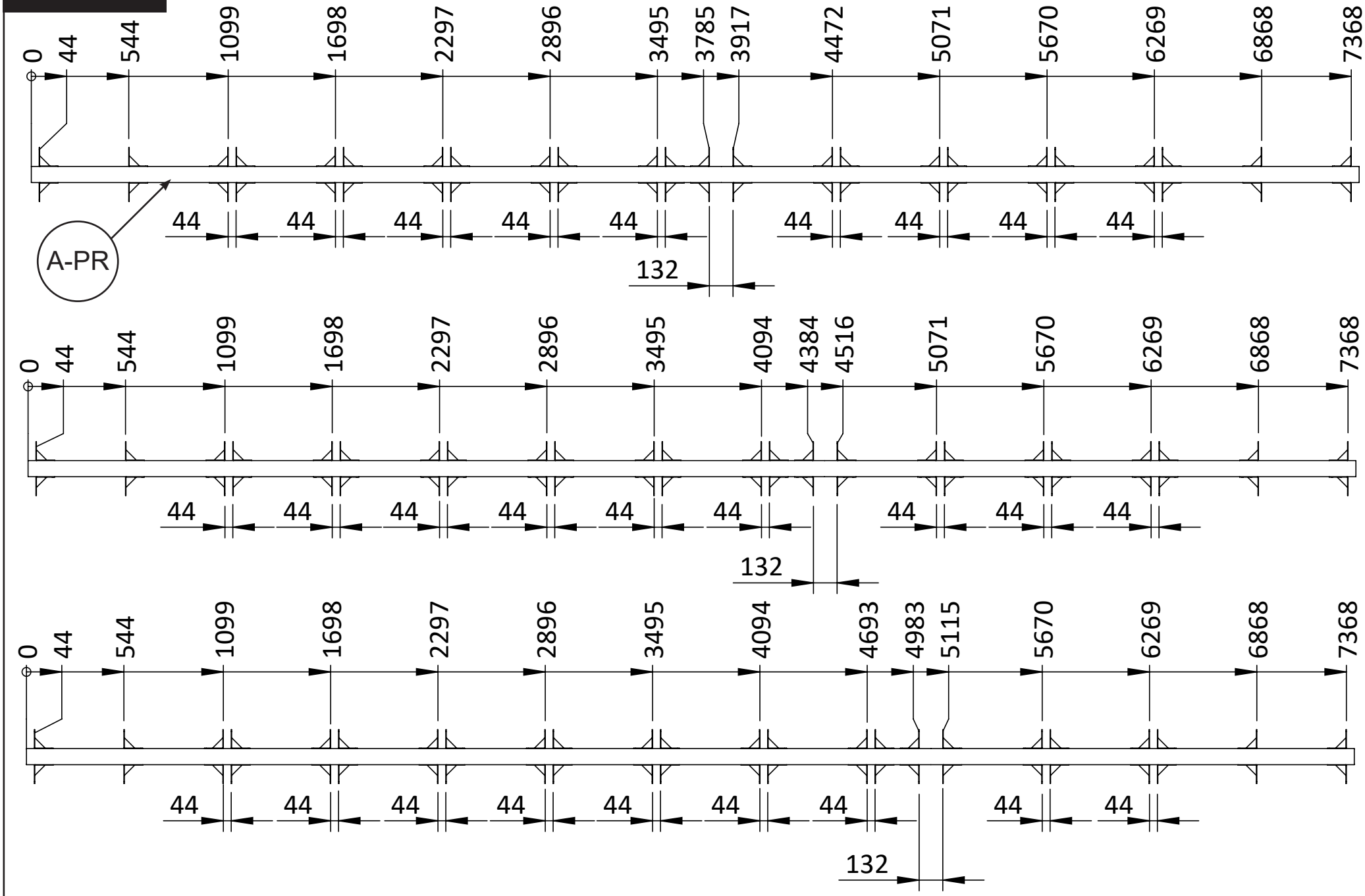
0
44
544
1099
1698
2297
2896
3495
3785
3917
4472
5071
5670
6269
6868
7368
A-PR
132
4094
4384
4516
4693
4983
5115

29

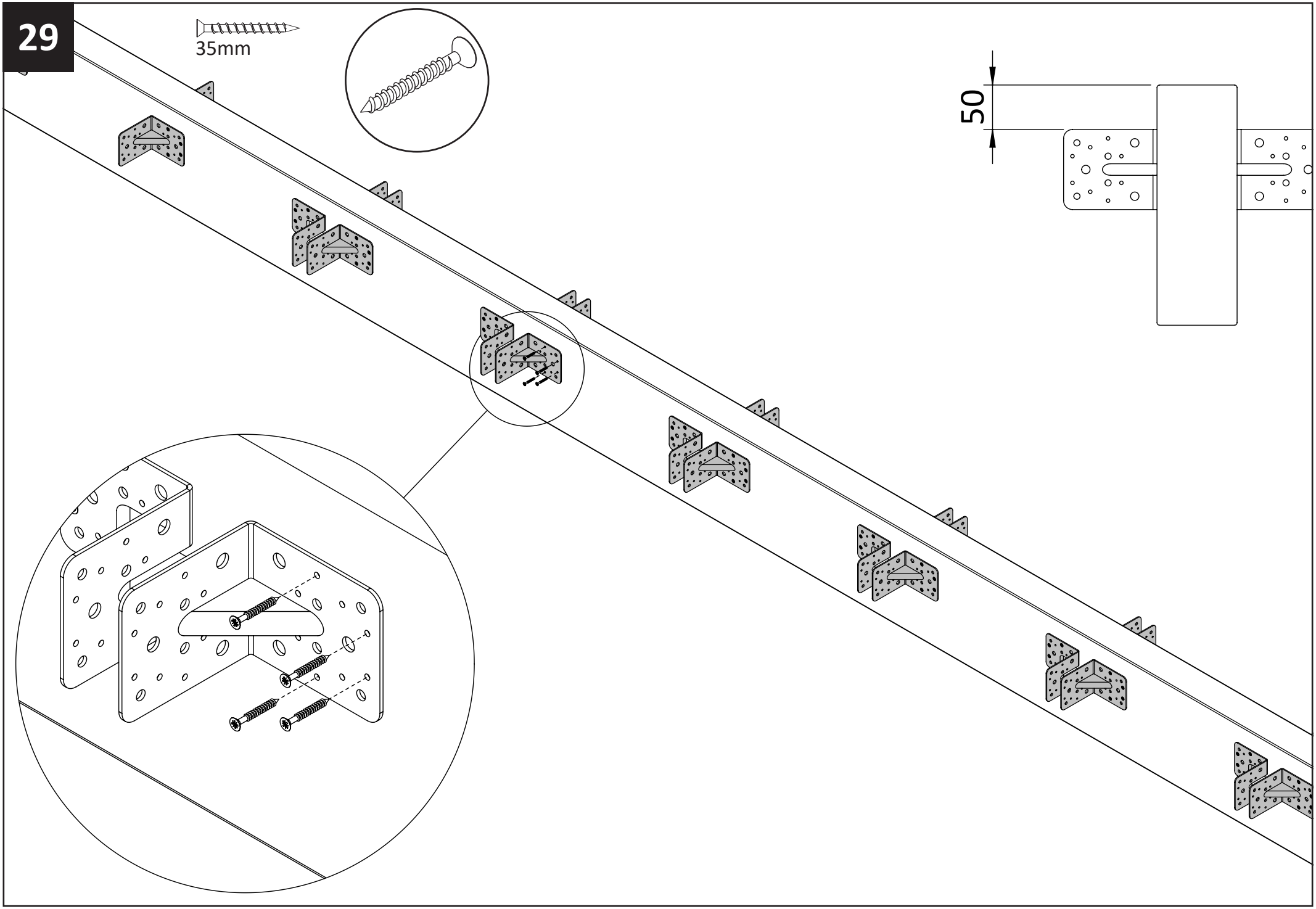

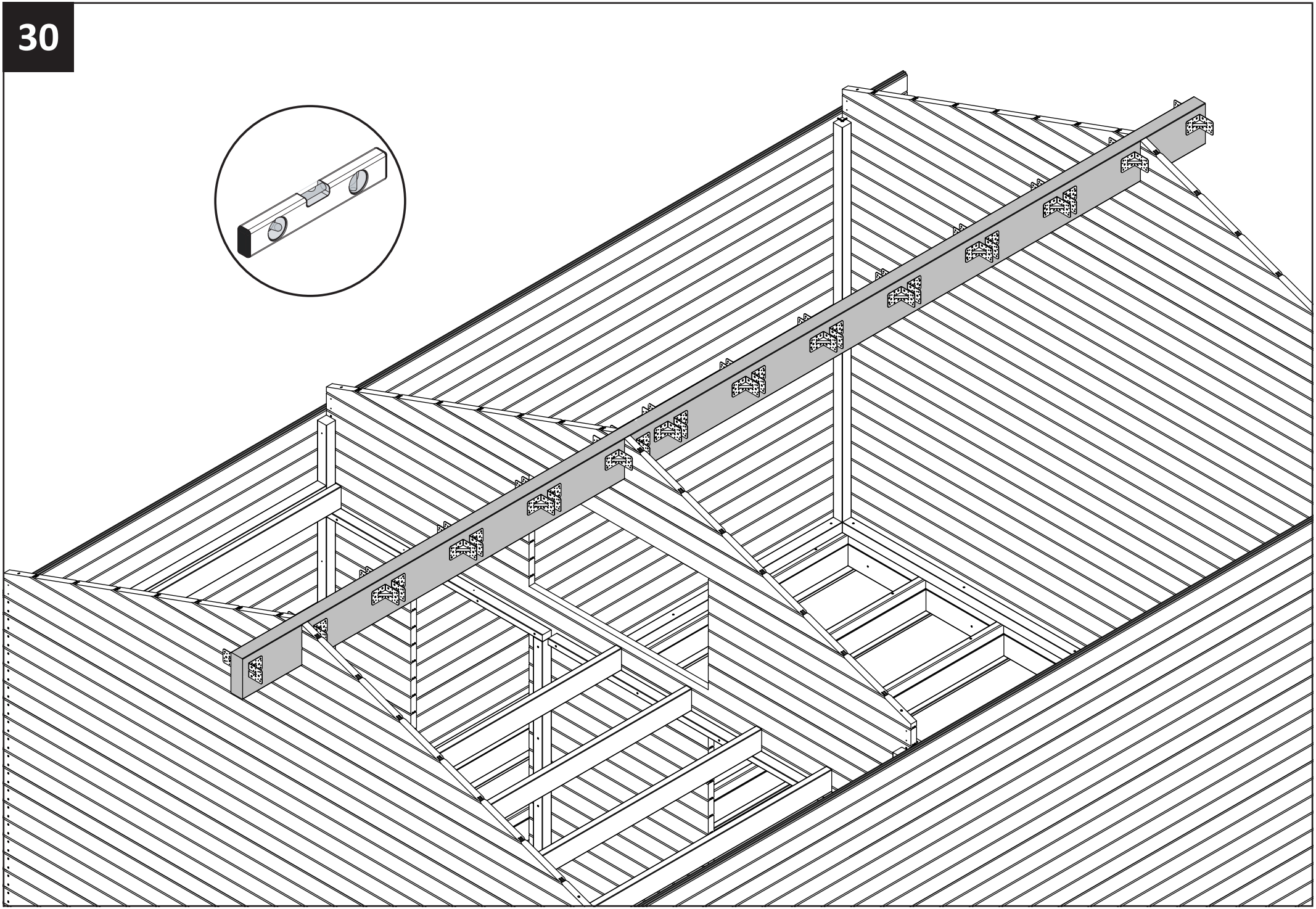

31

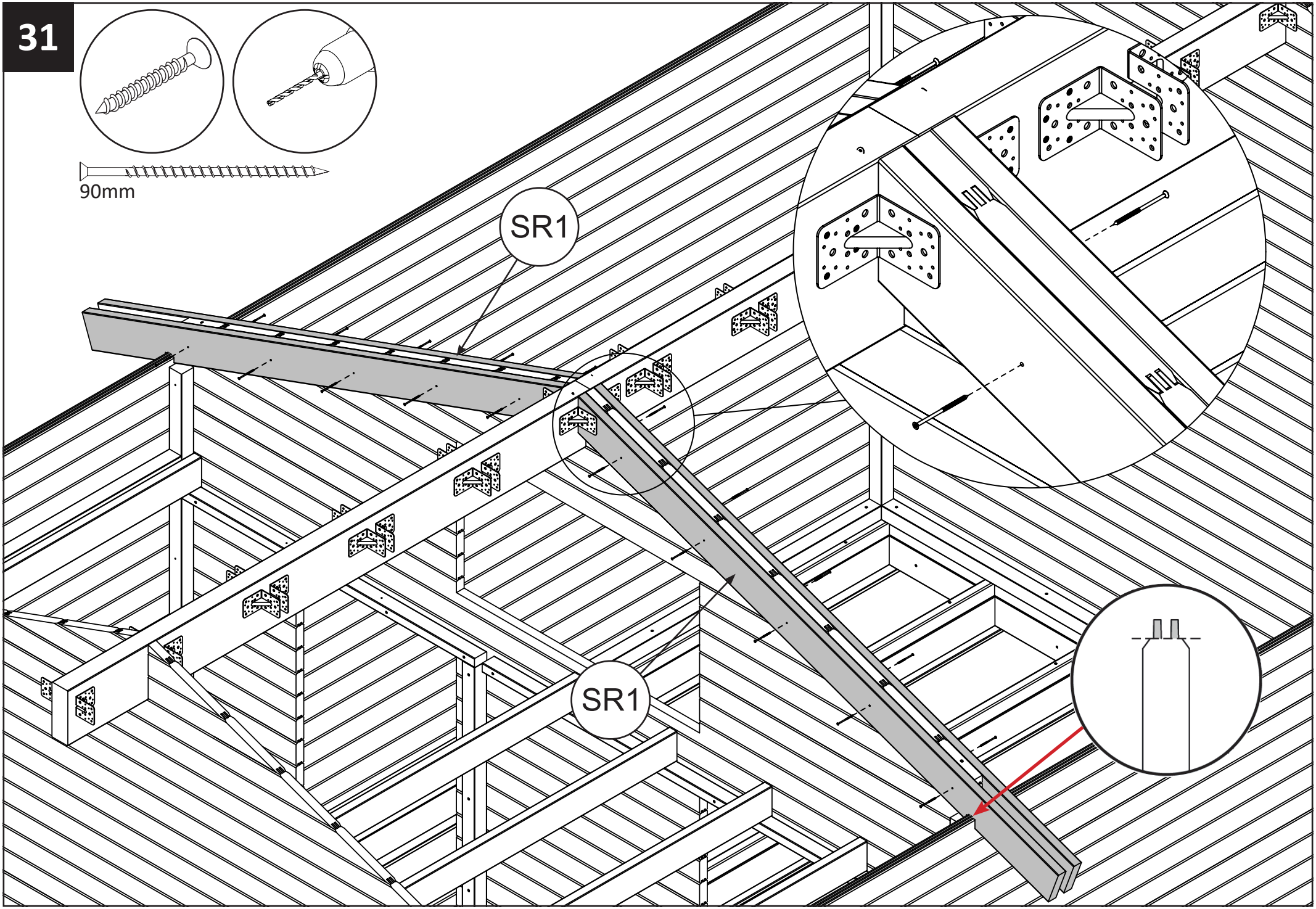

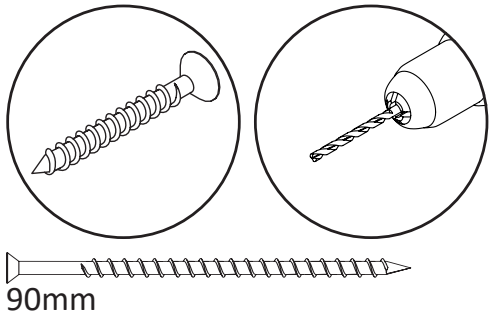


SR1

SR1

SR1

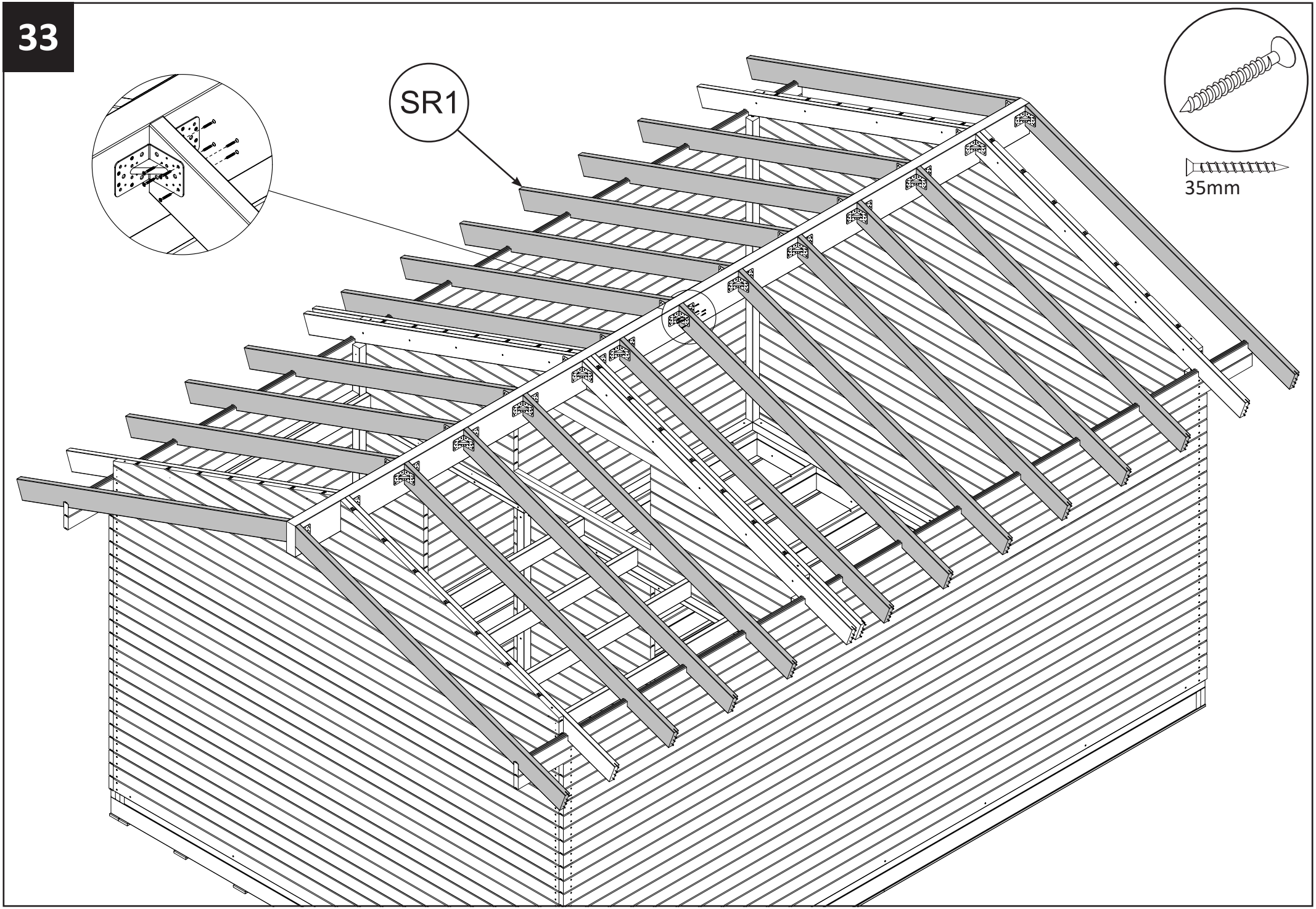
SR1
35mm

**34**

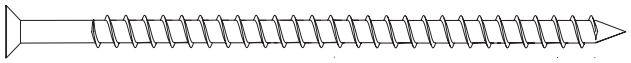

180mm

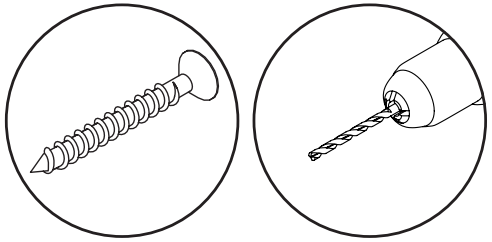




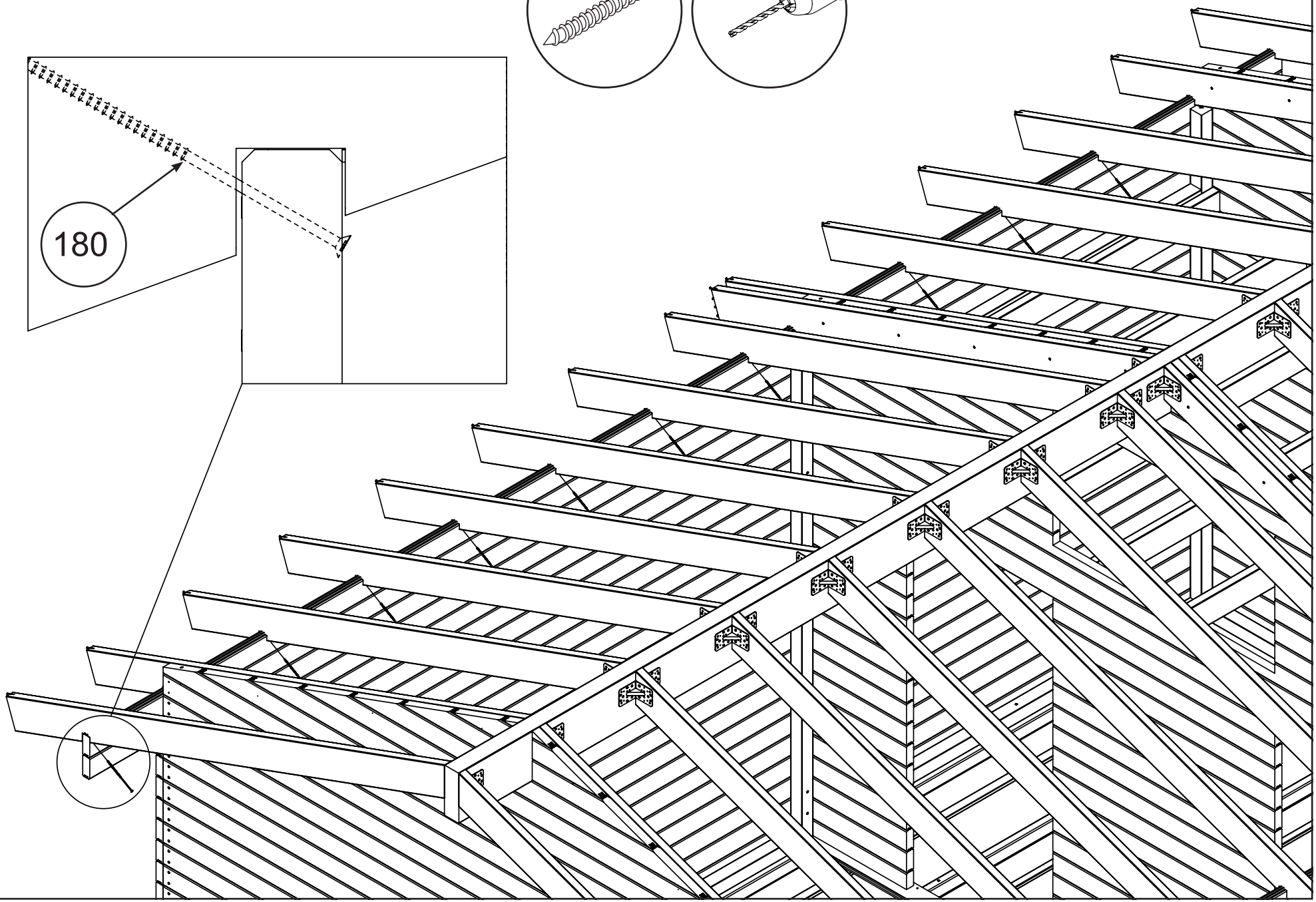

**35**



180mm

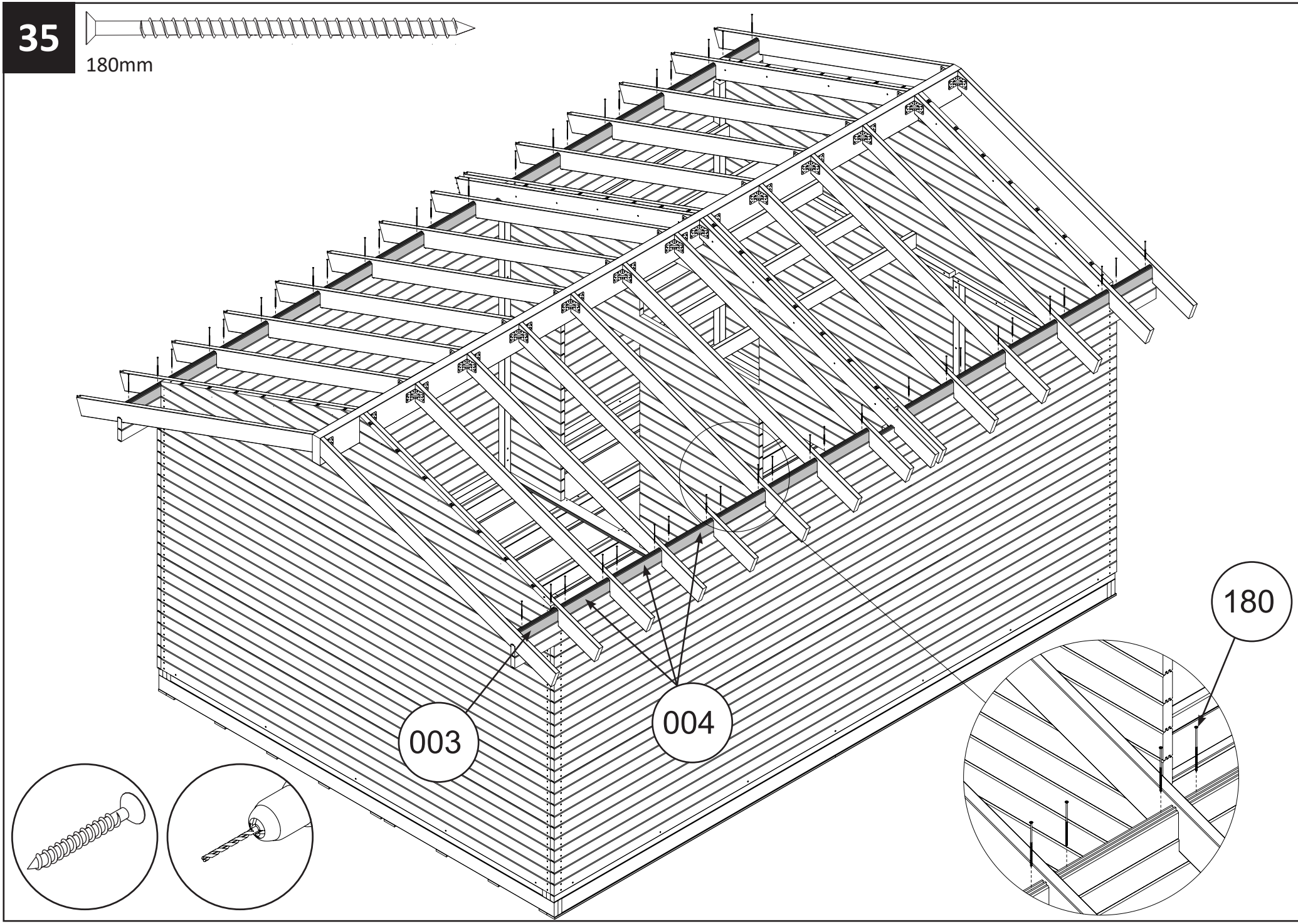

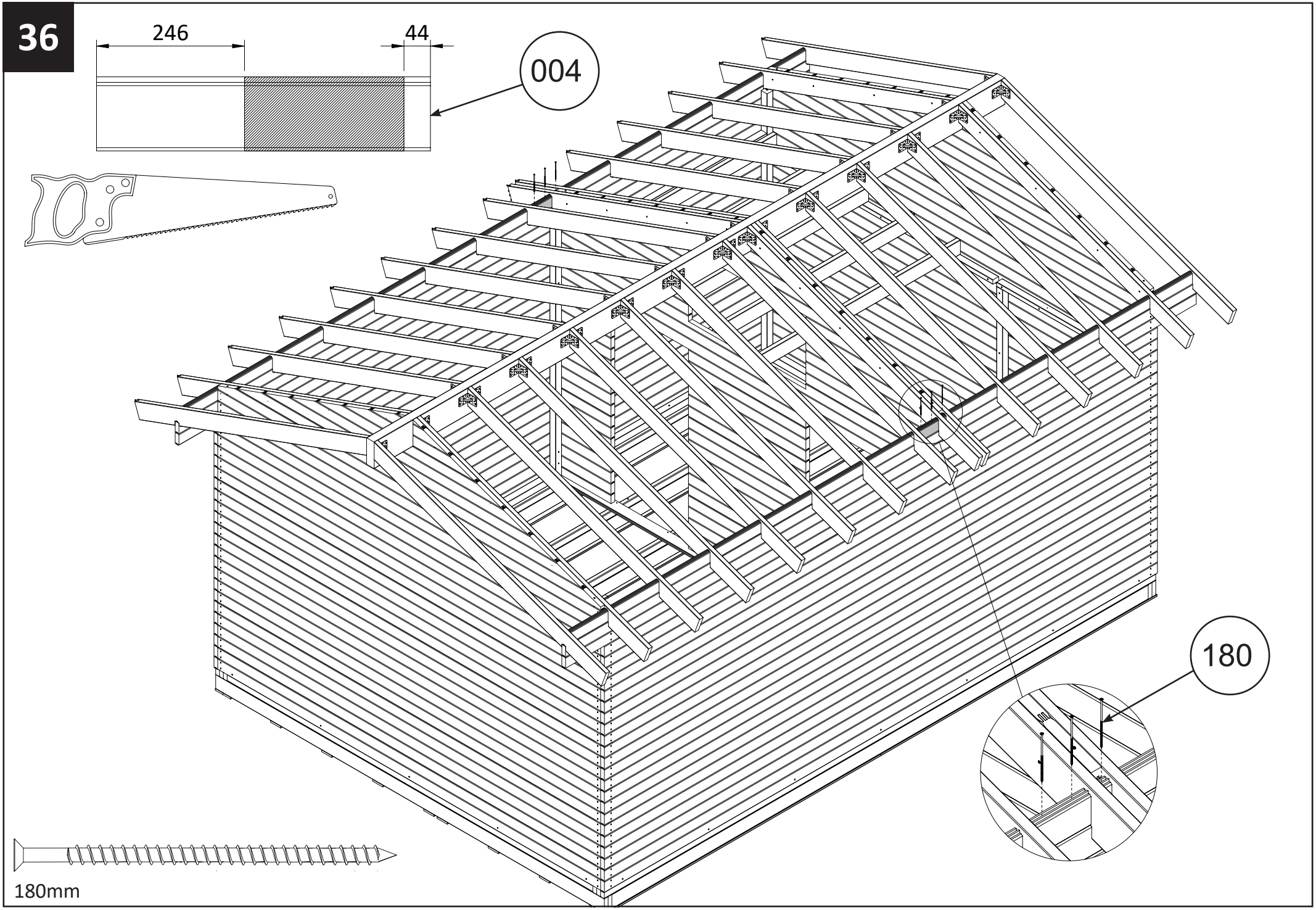
246
44
004
180
180mm

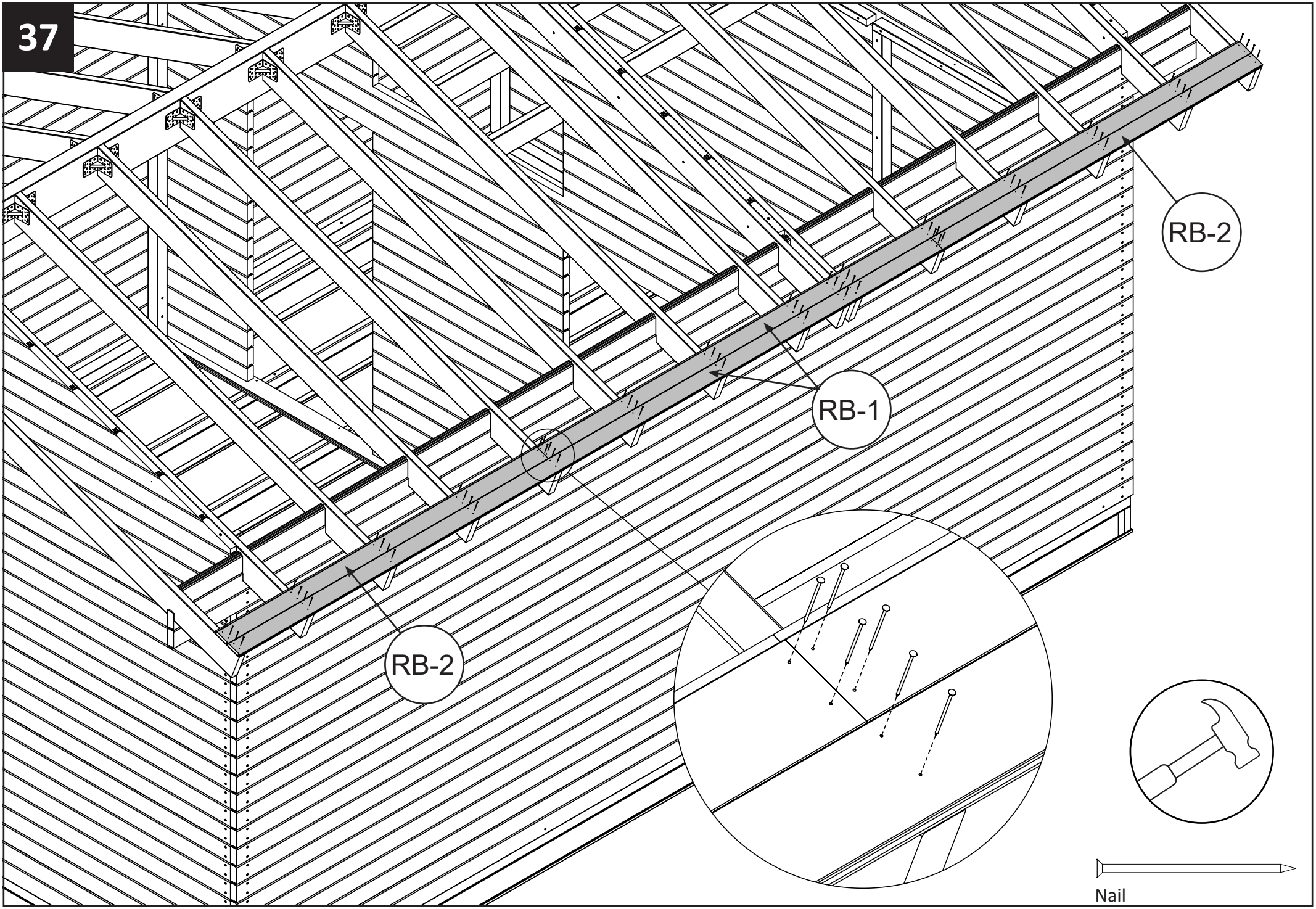
RB-2
RB-1
RB-2
Nail

**38**



Nail



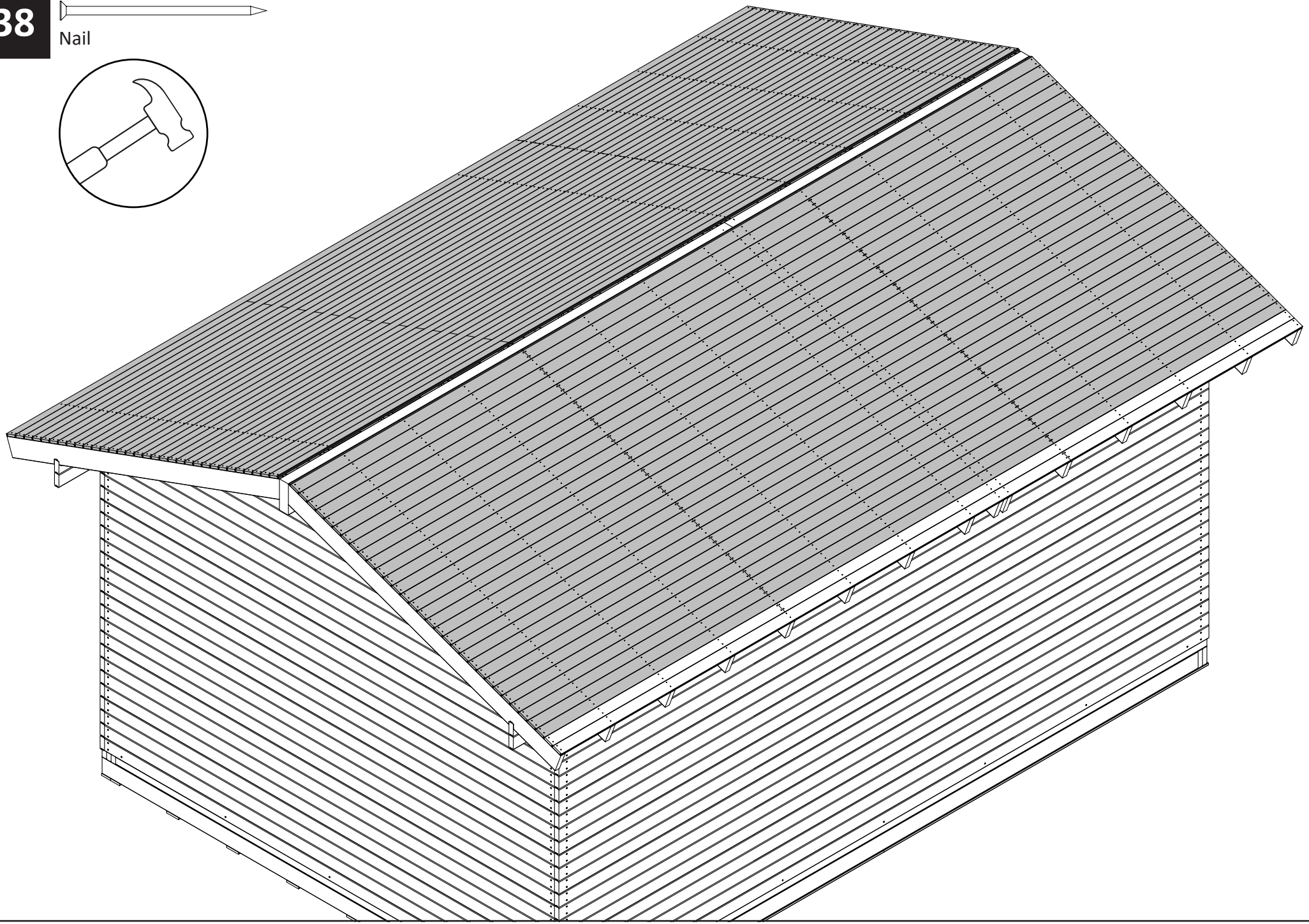

39

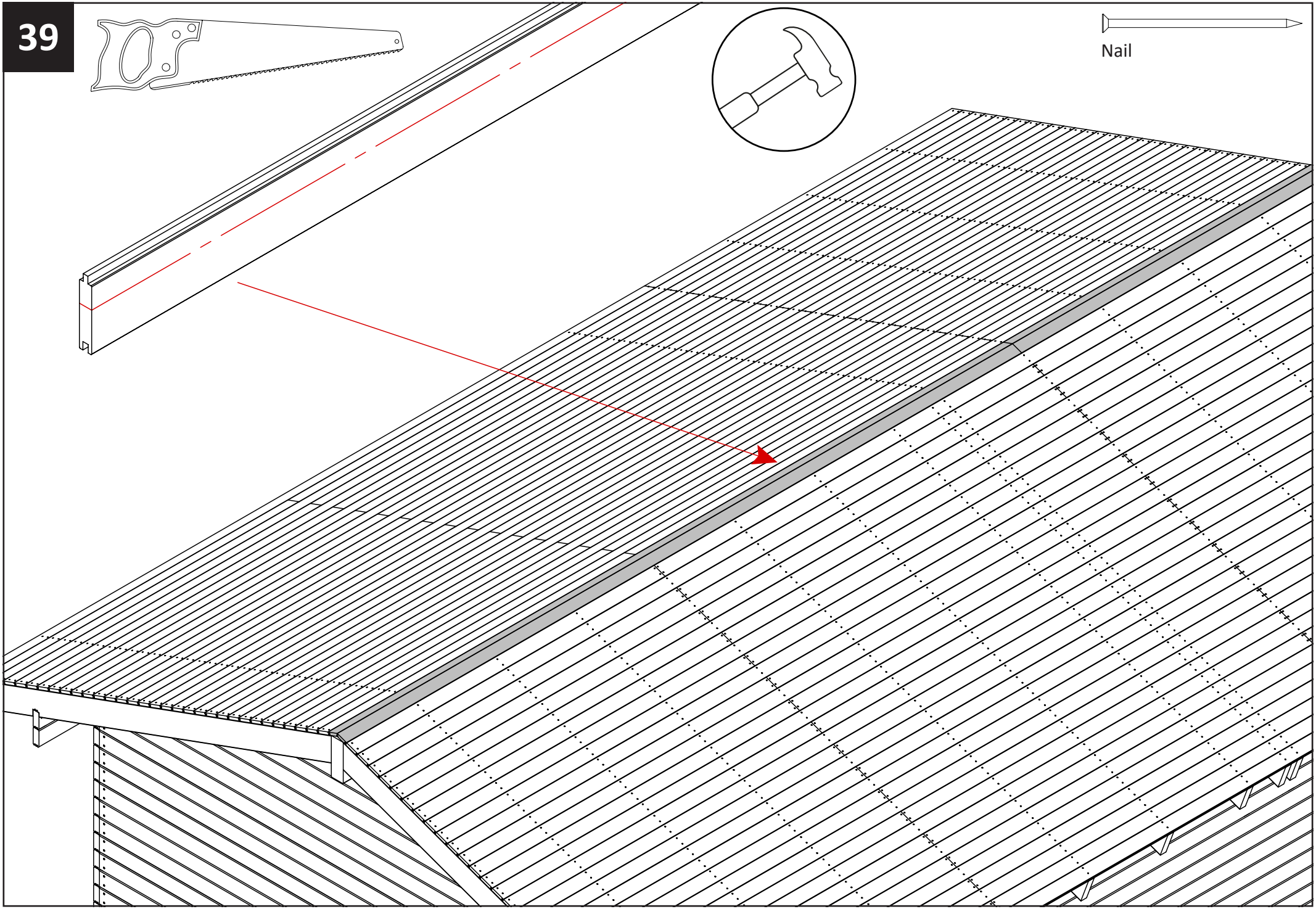

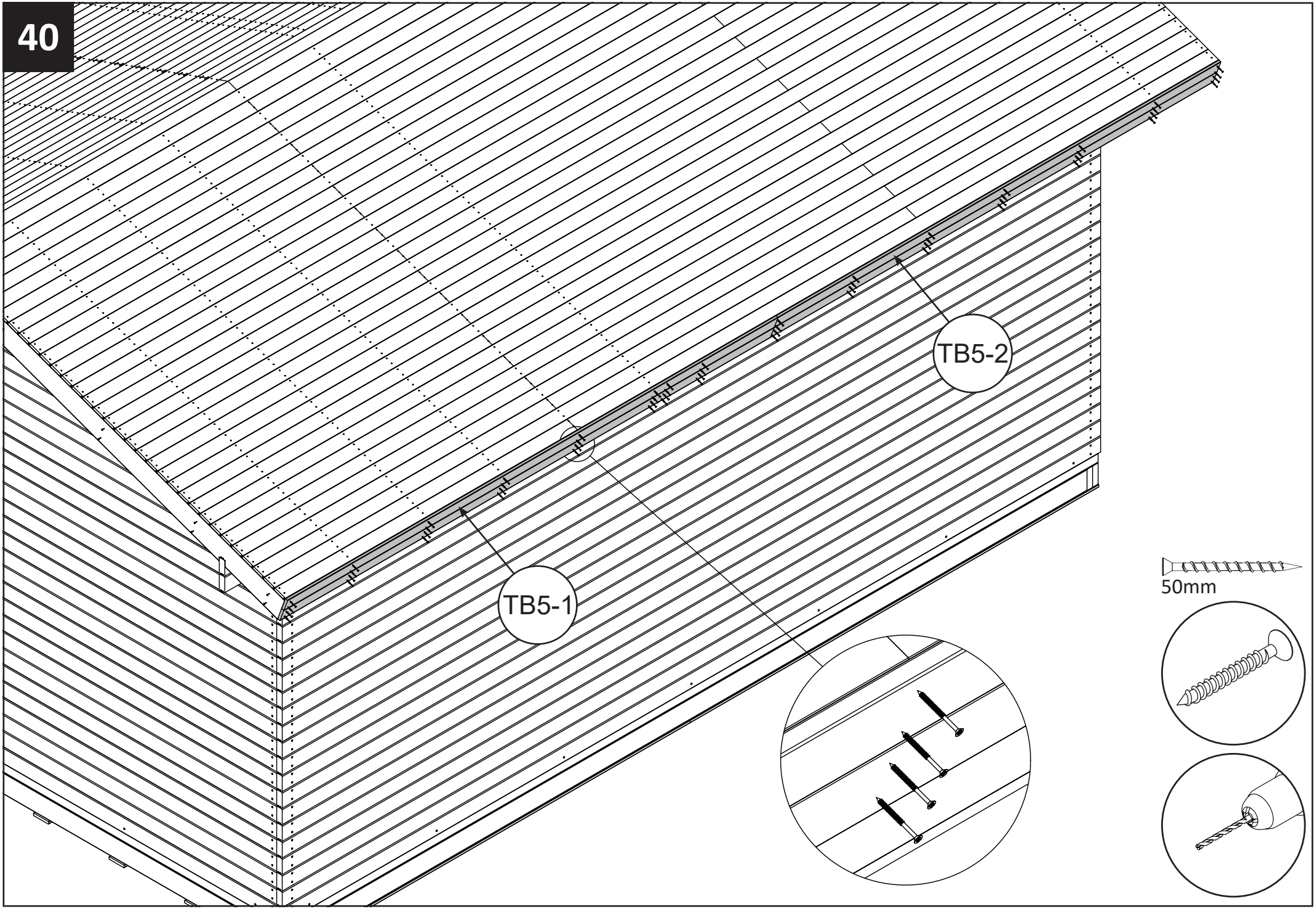
TB5-2
TB5-1
50mm

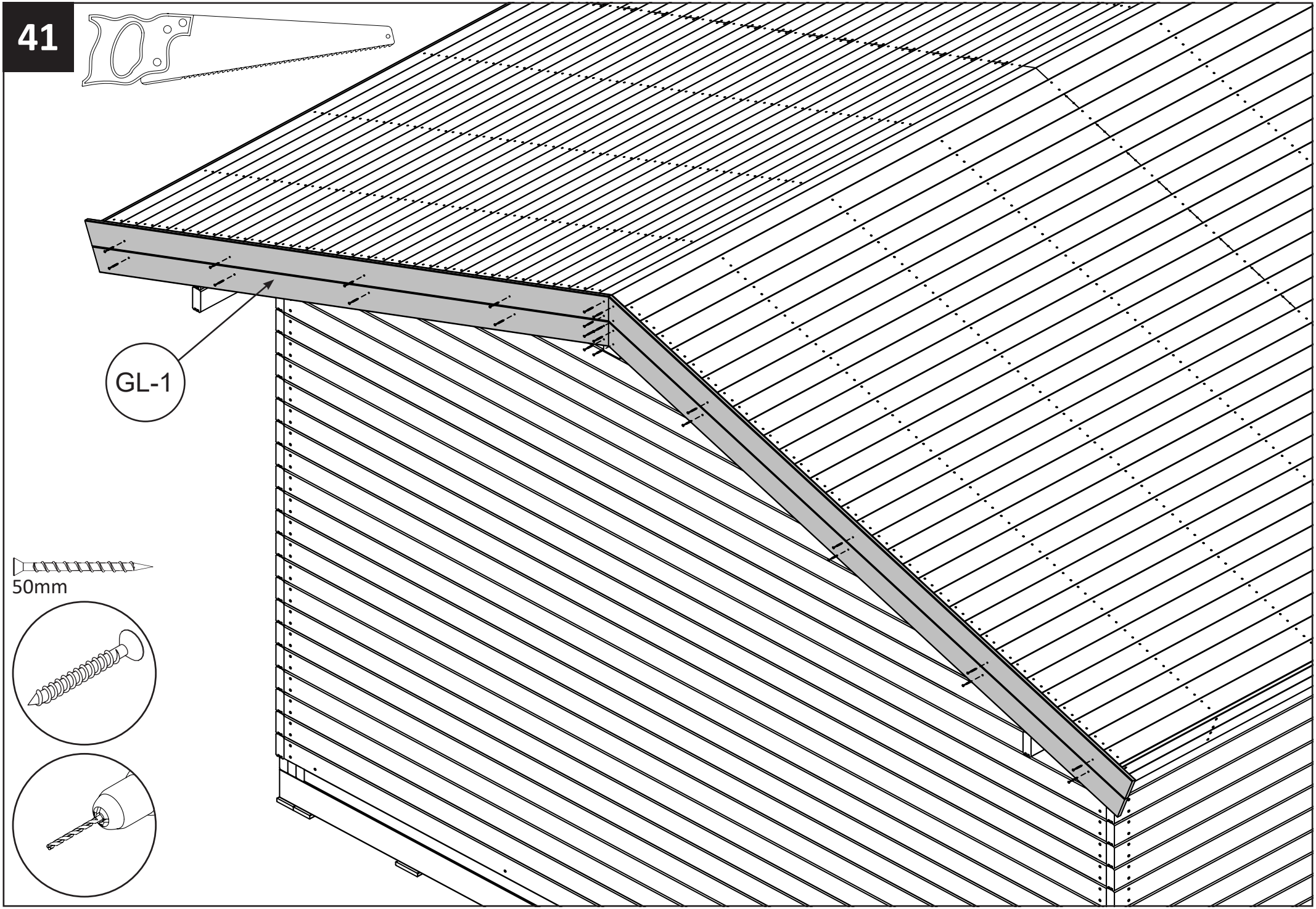
GL-1
50mm

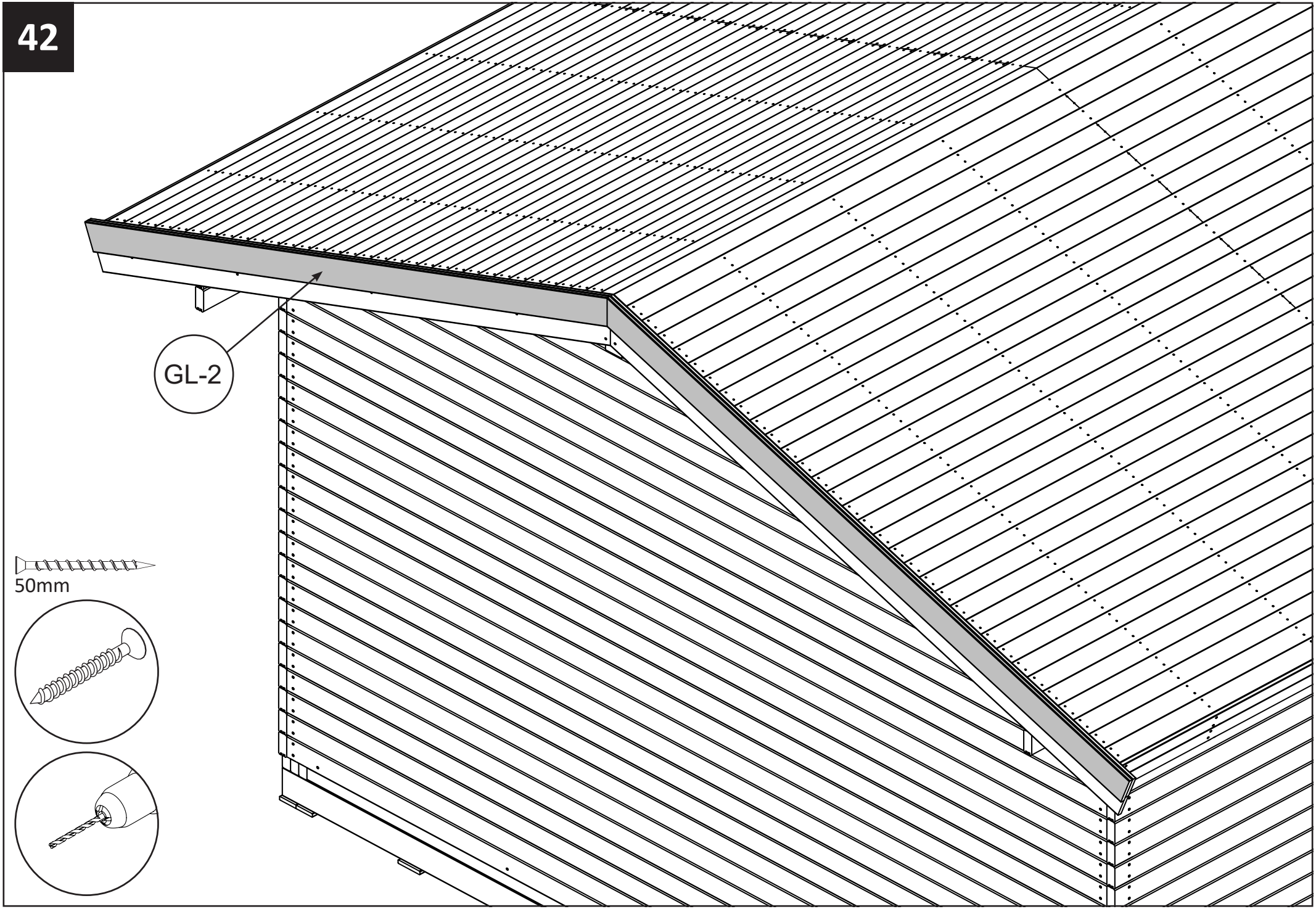
GL-2
50mm

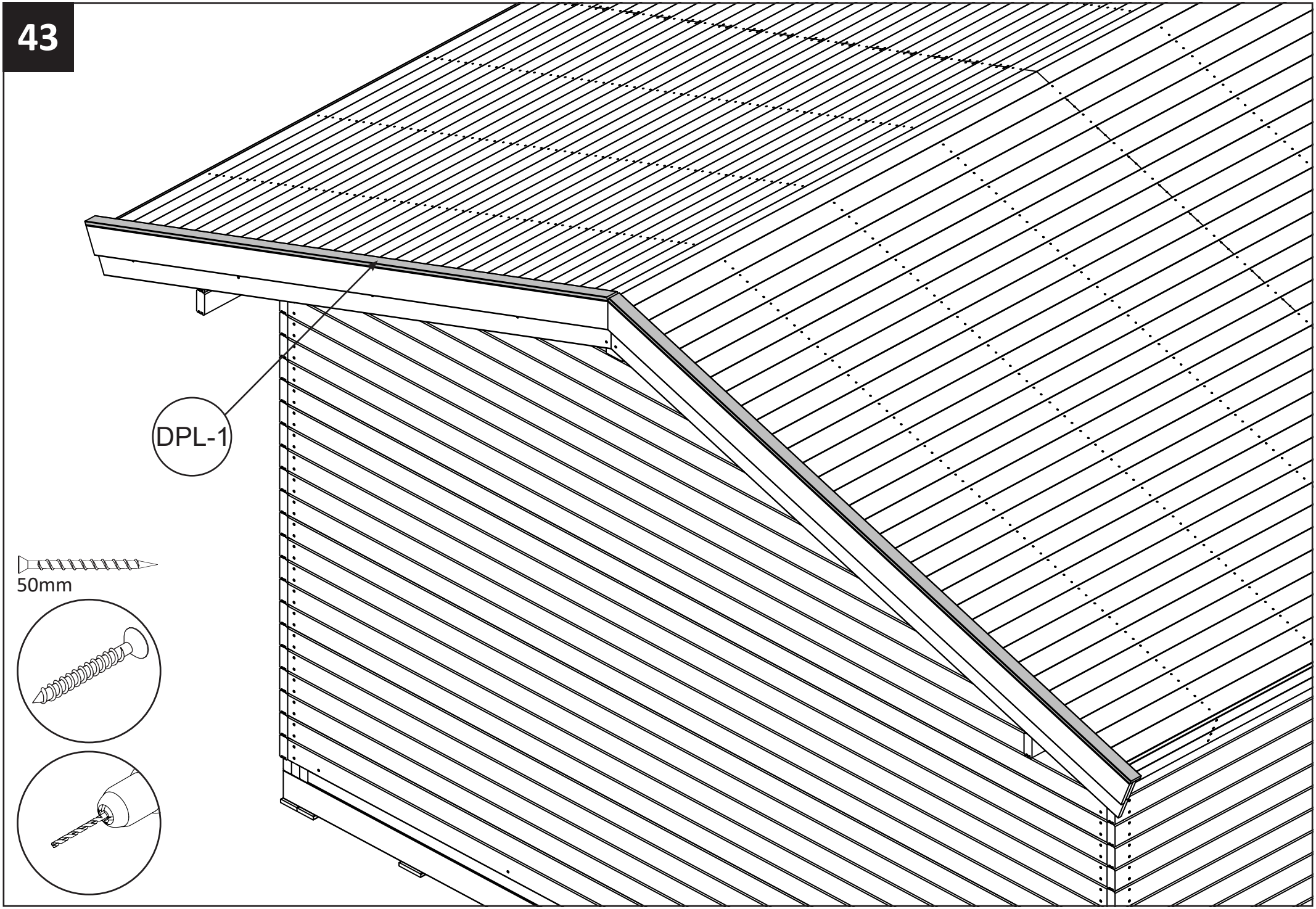
DPL-1
50mm

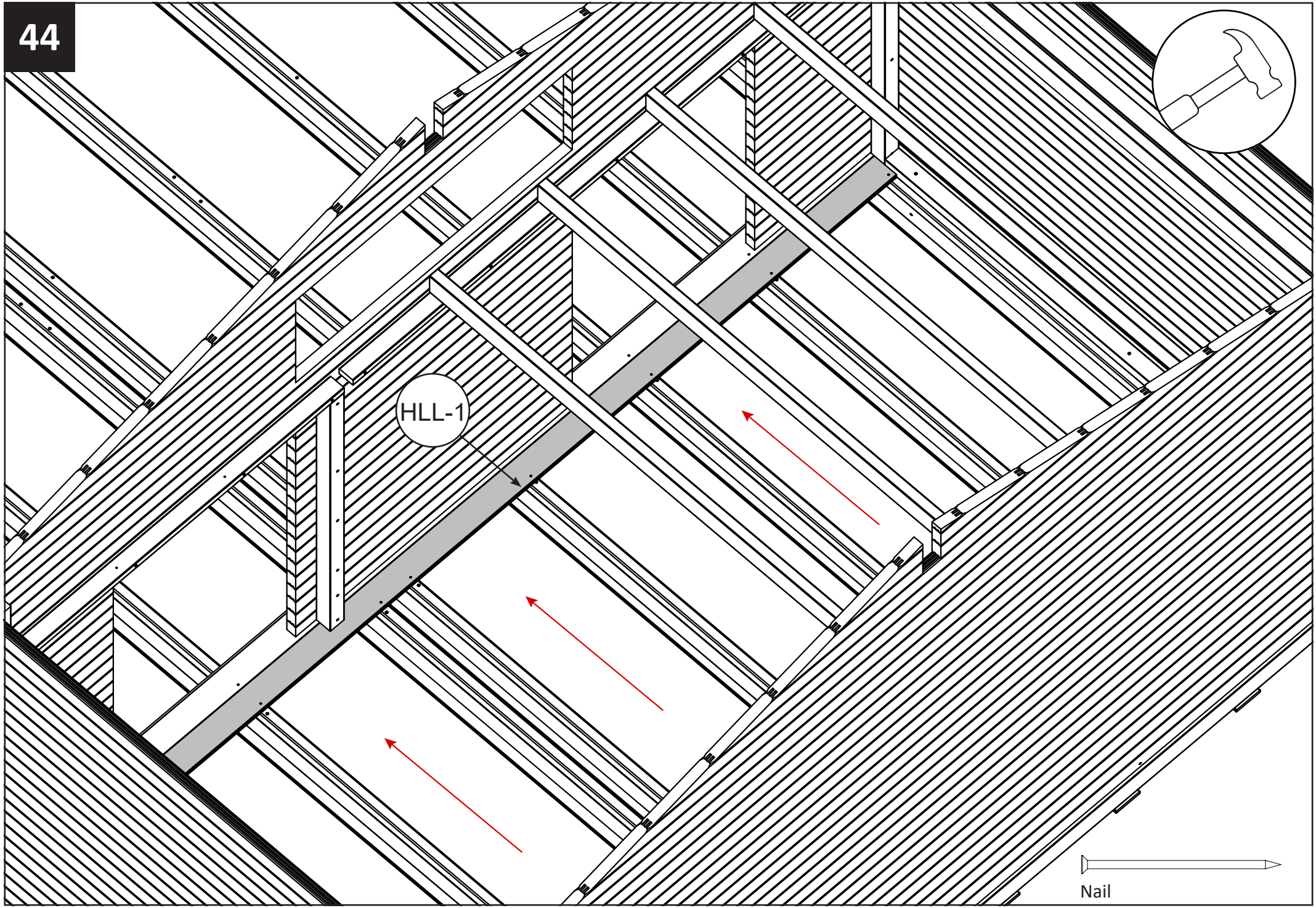
HLL-1
Nail

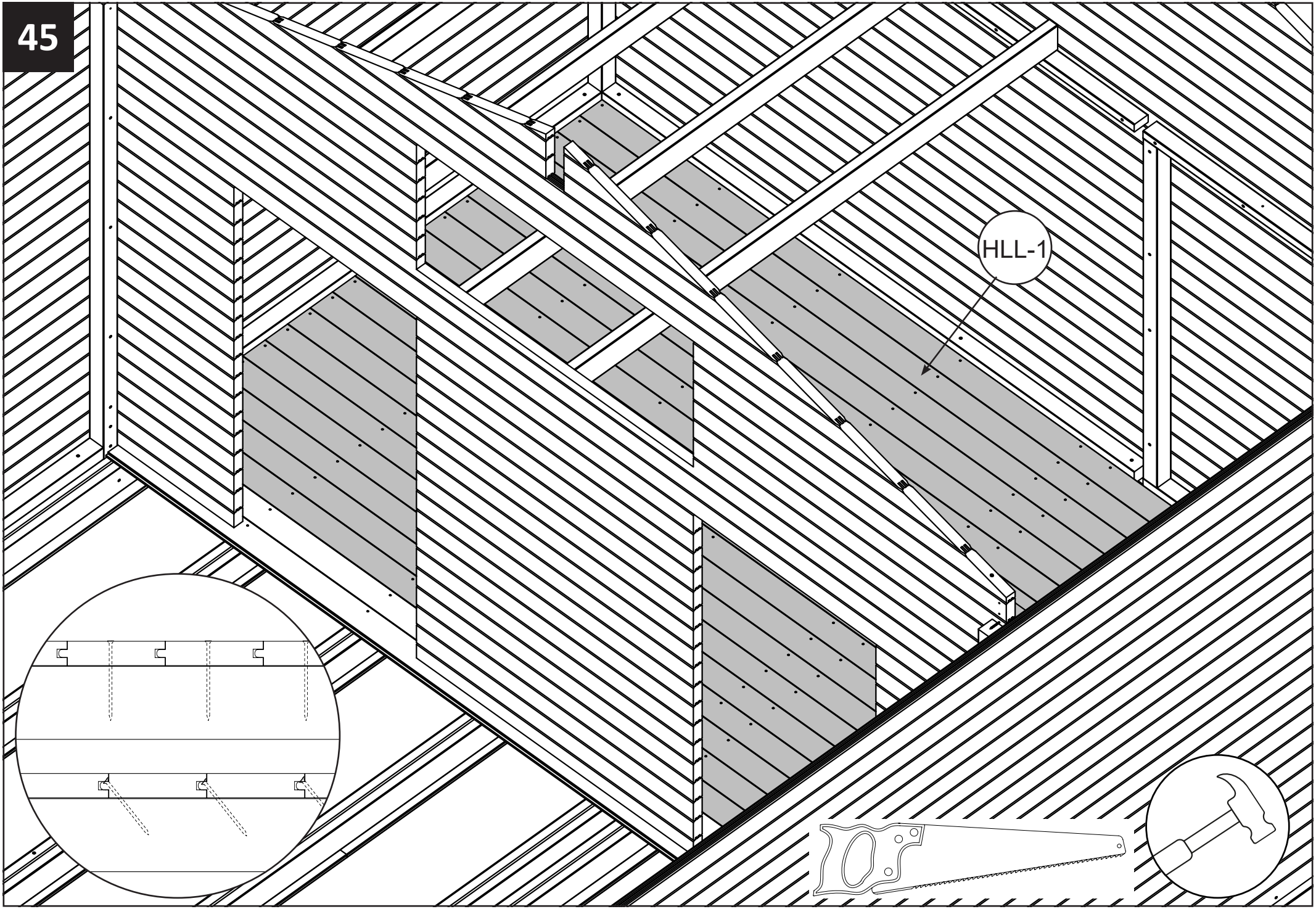
HLL-1

# 46
# CUT

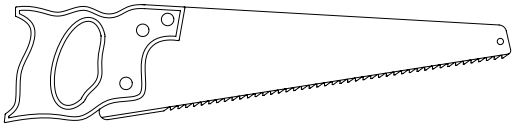

| WALL | GROUNDPLAN | USE ITEM | CUT | QTY | NEW IDENT |
|---|---|---|---|---|---|
| WC | 1 | 005<br>+<br>006<br>+<br>007 | 3039 | x 1<br>+<br>x 19<br>+<br>x 1 | 005<br>+<br>006<br>+<br>007 |
| | 2 | 005<br>+<br>006<br>+<br>007 | 2440<br>3039 | x 1<br>+<br>x 19<br>+<br>x 1 | 005-2440<br>+<br>006-2440<br>+<br>007-2440 |
| | 3 | 005<br>+<br>006<br>+<br>007 | 1841<br>3039 | x 1<br>+<br>x 19<br>+<br>x 1 | 005-1841<br>+<br>006-1841<br>+<br>007-1841 |

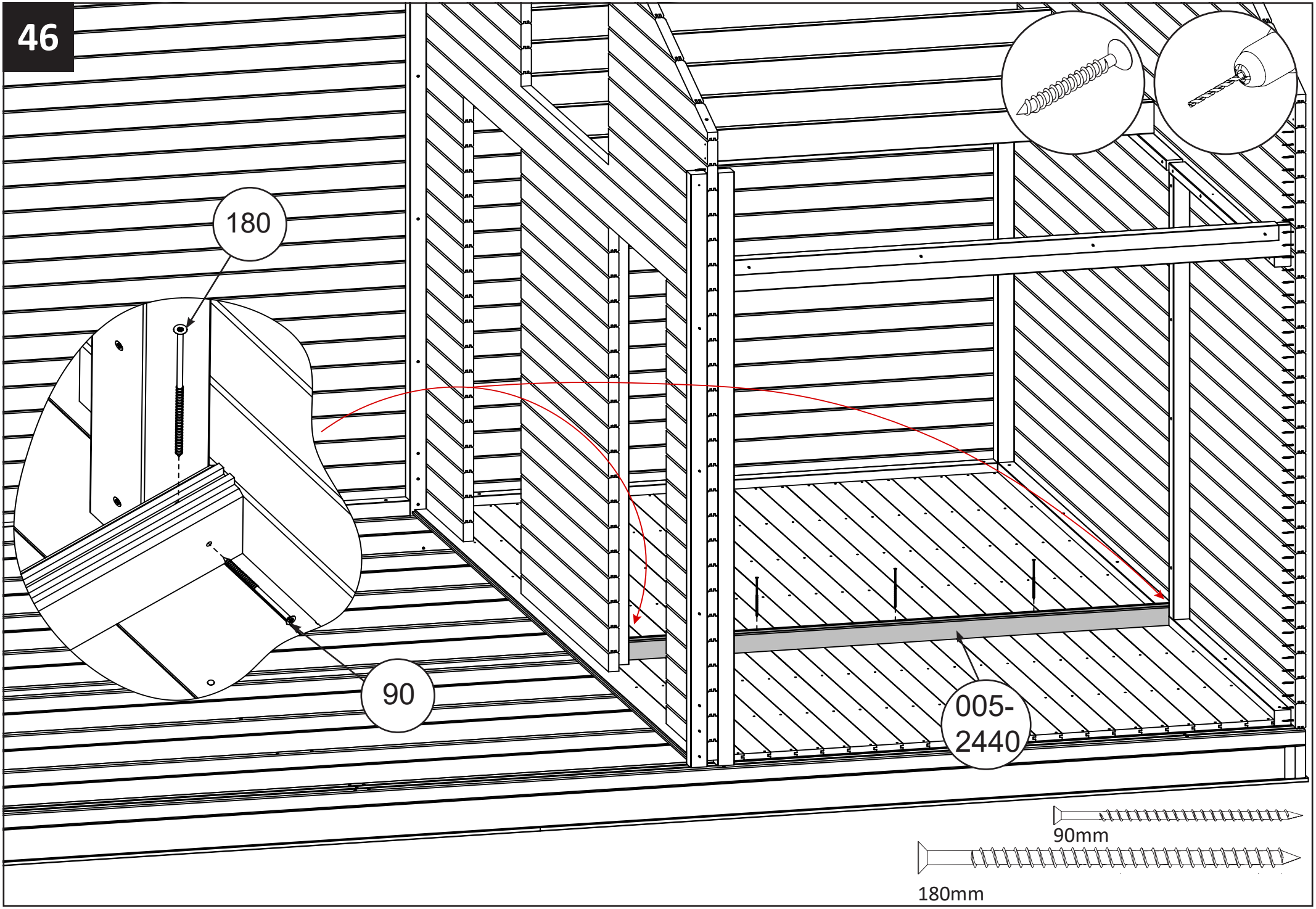
180
90
005-
2440
90mm
180mm

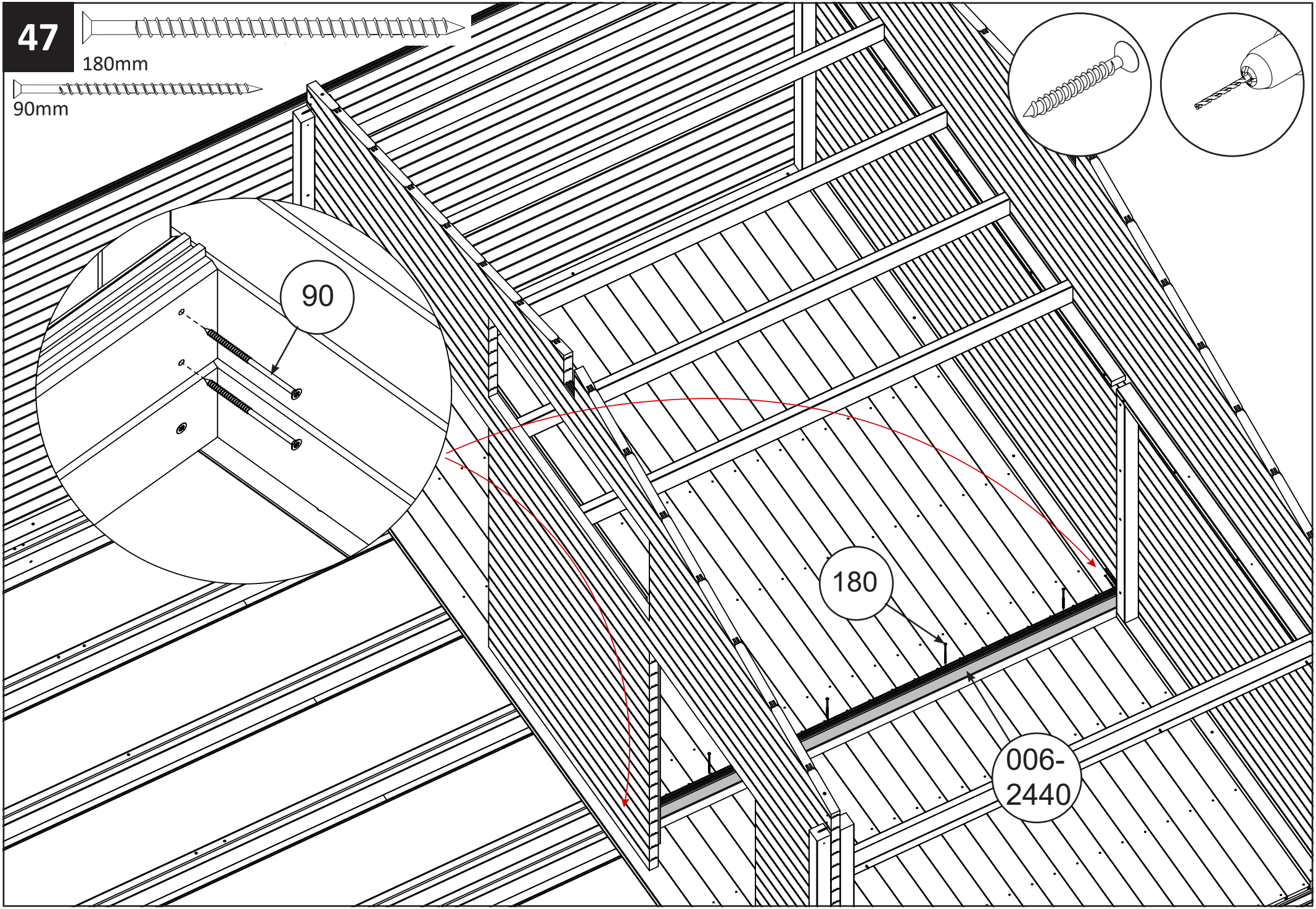
47
180mm
90mm
90
180
006-
2440

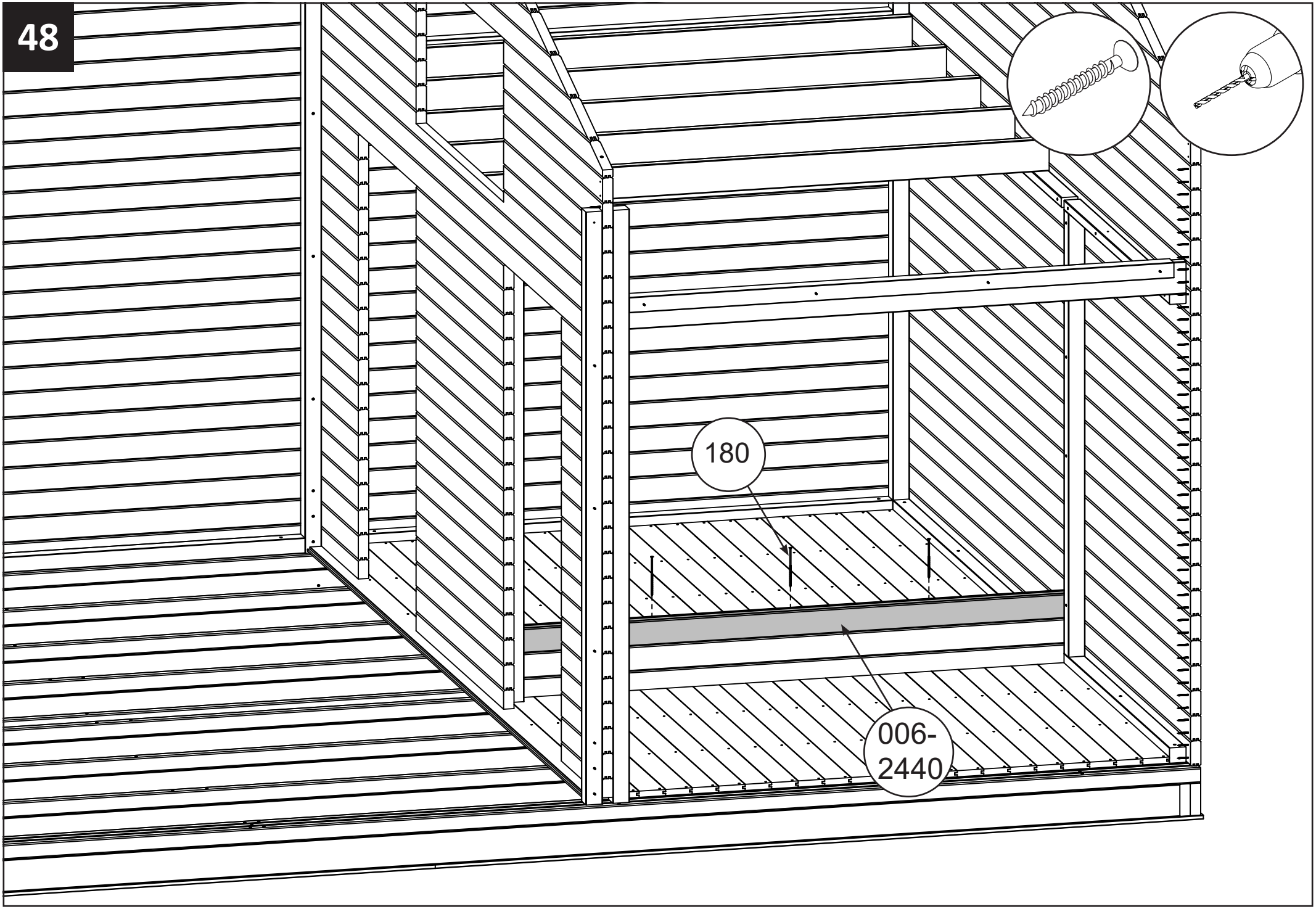
180
006-
2440

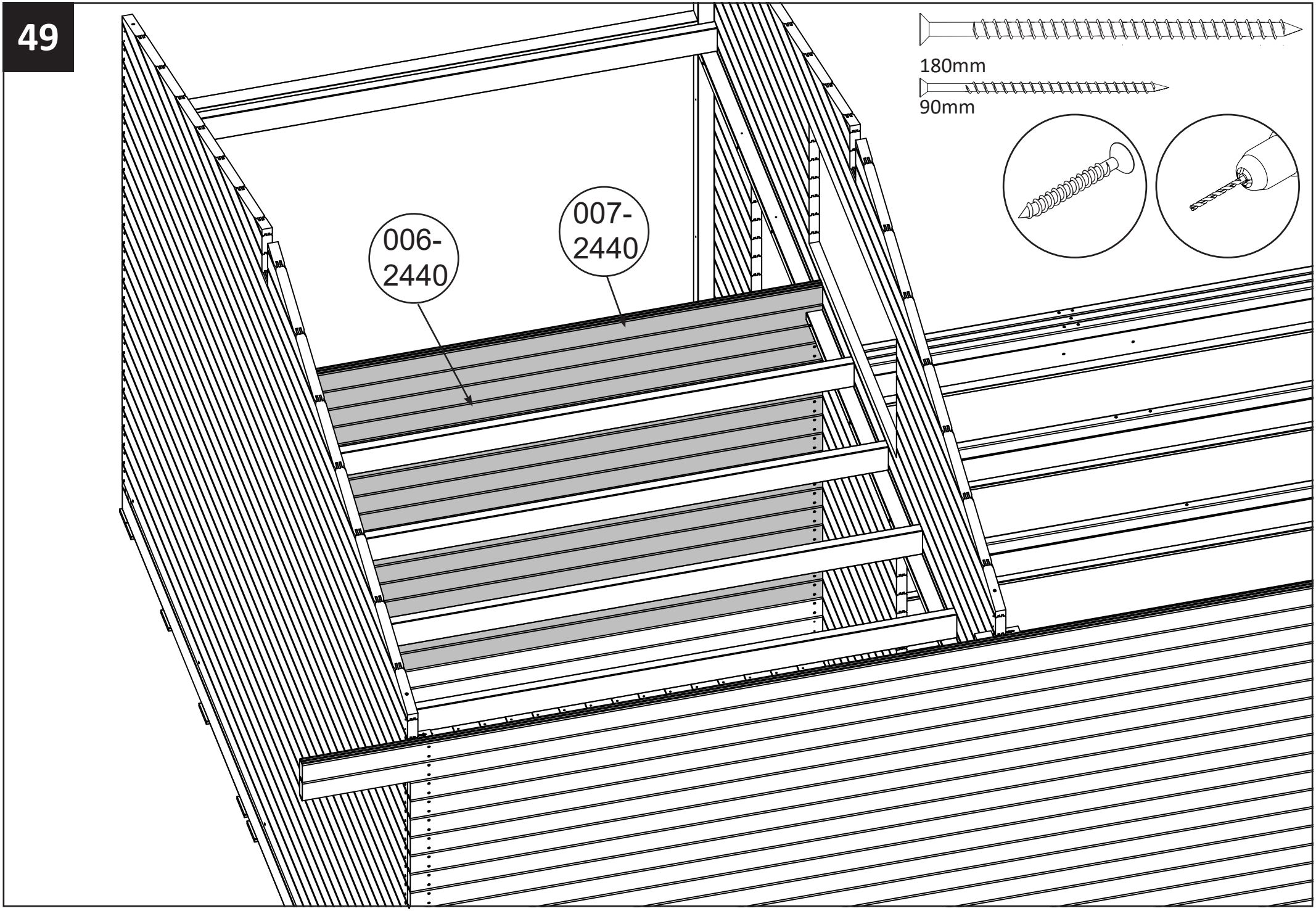
006-
2440
007-
2440
180mm
90mm

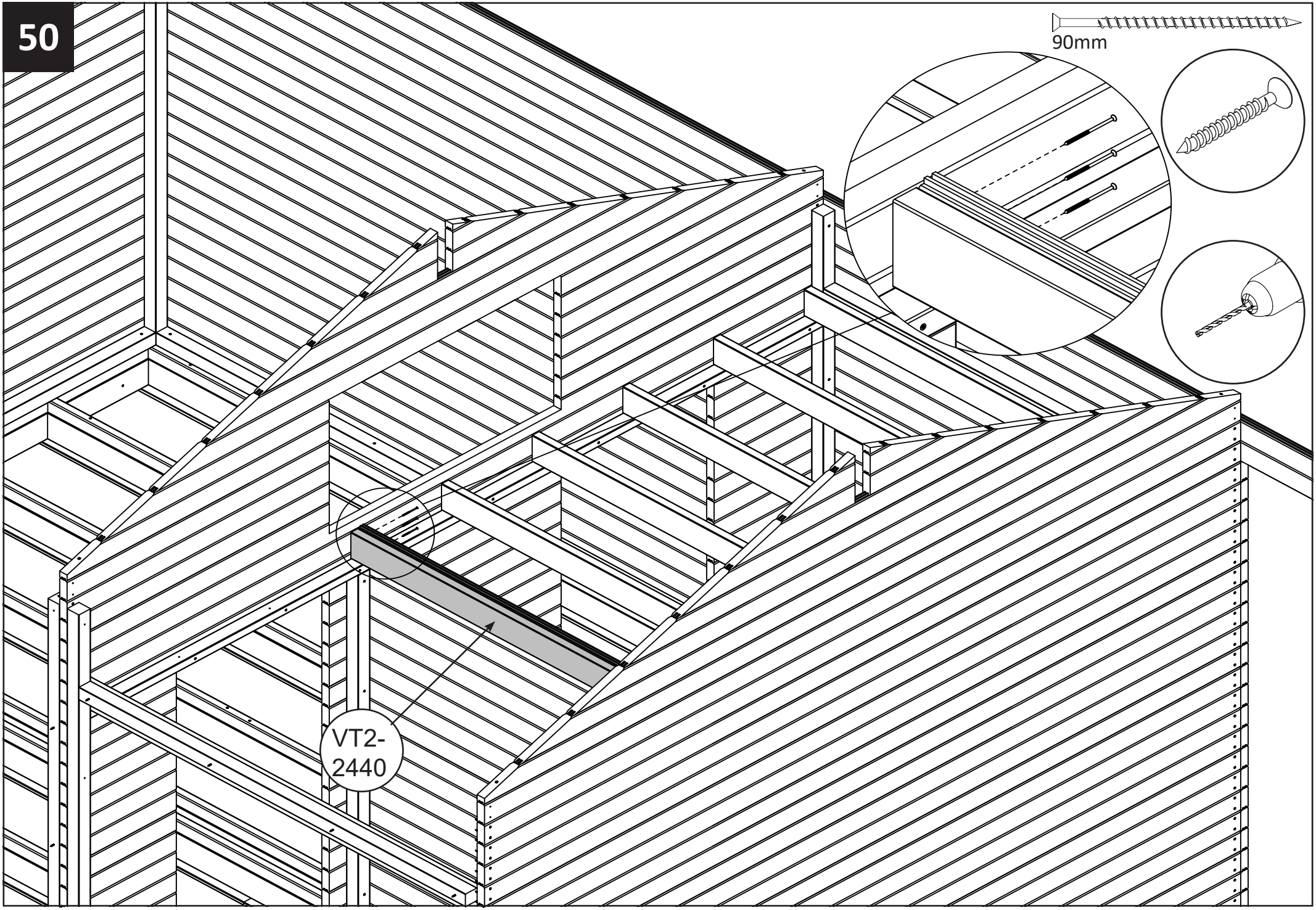
90mm
VT2-
2440

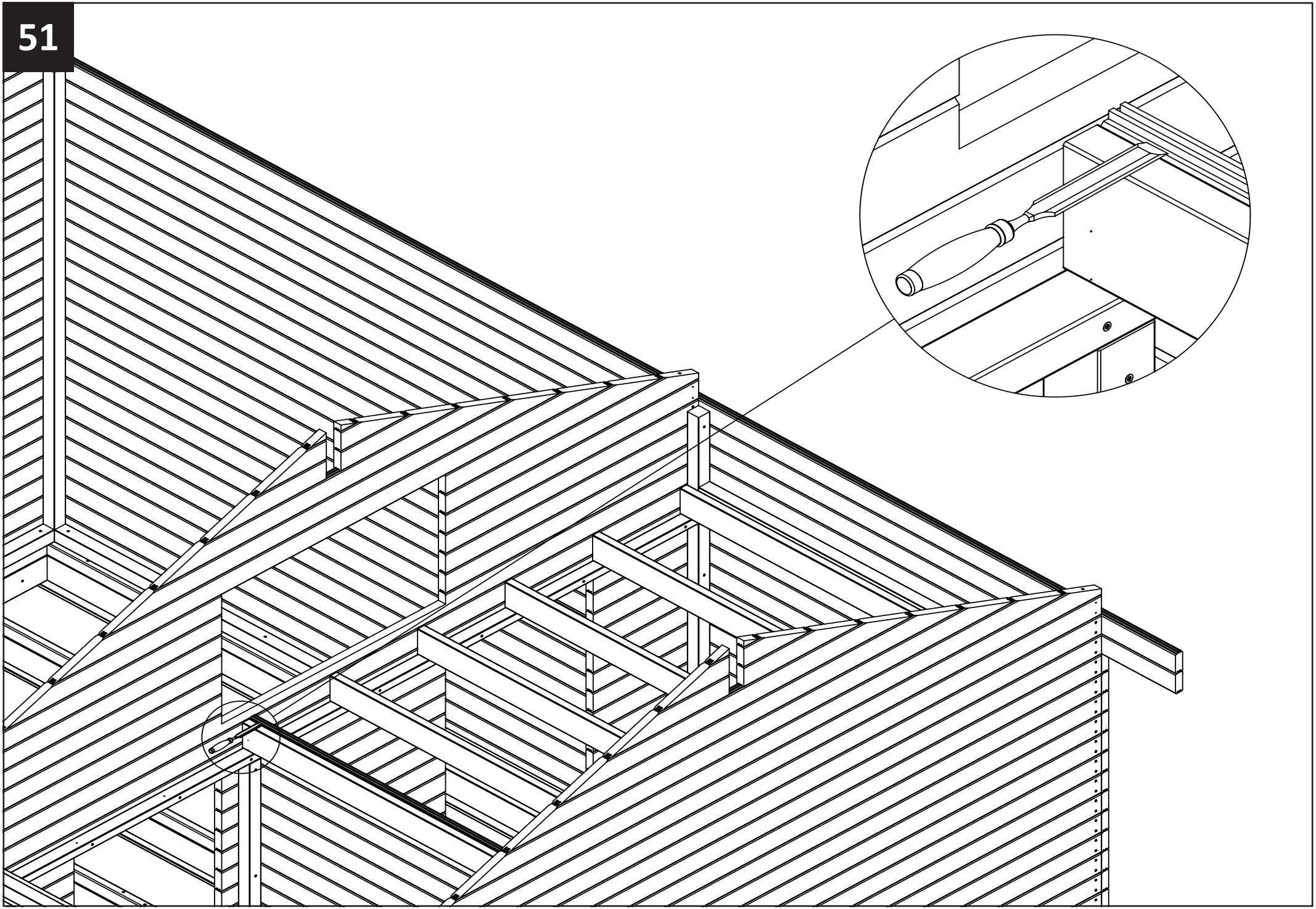

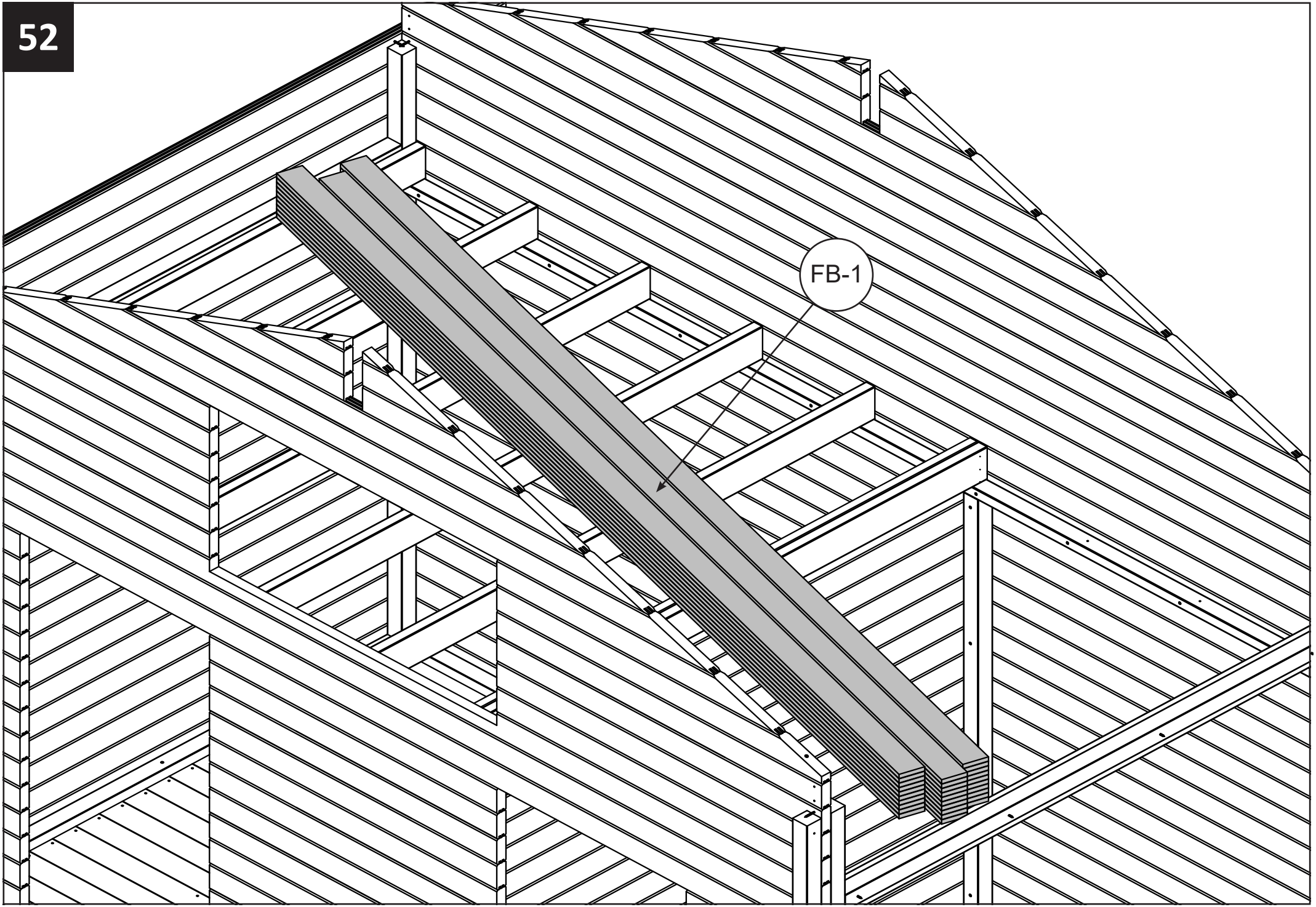
FB-1

53

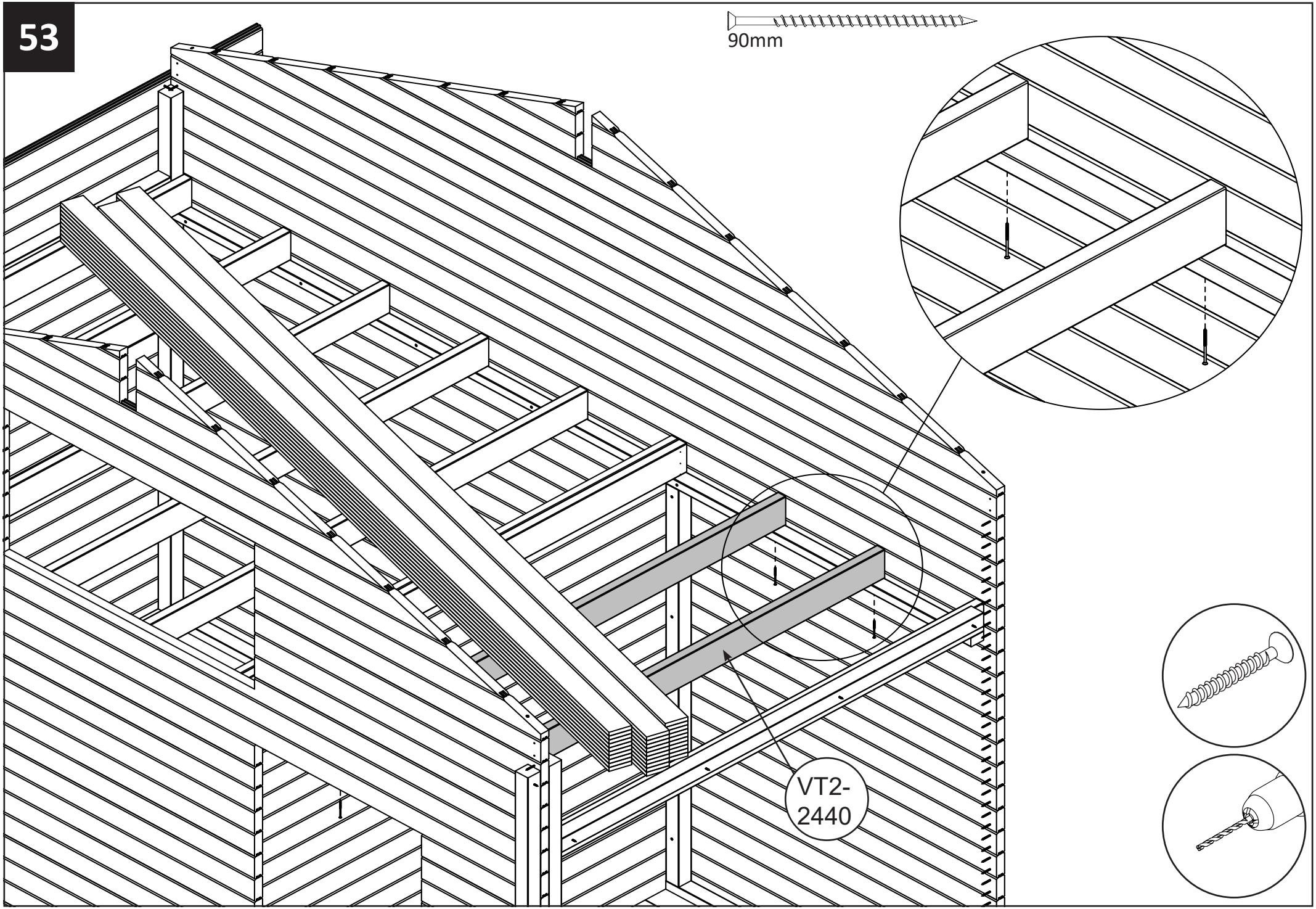

**54**



Nail

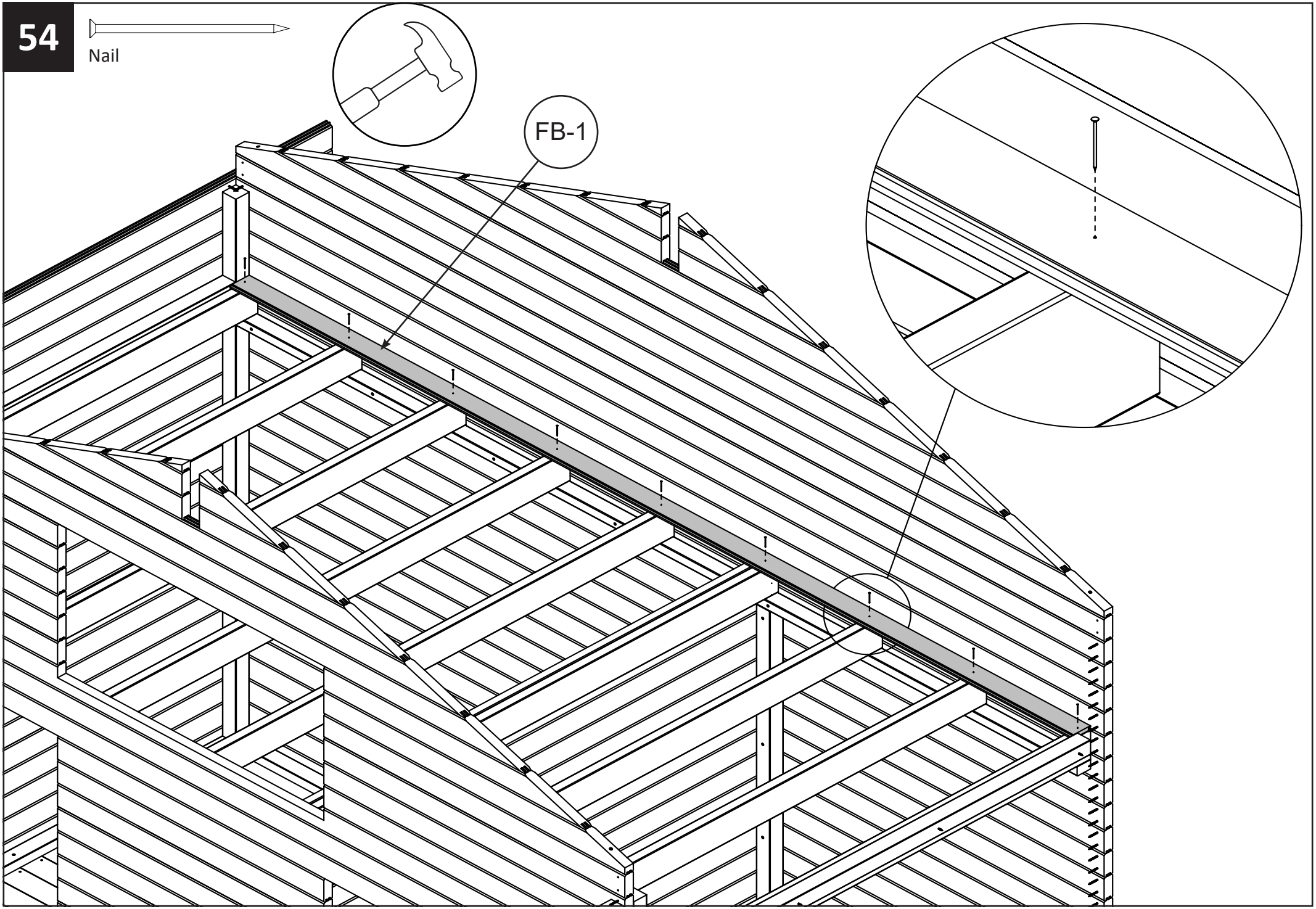

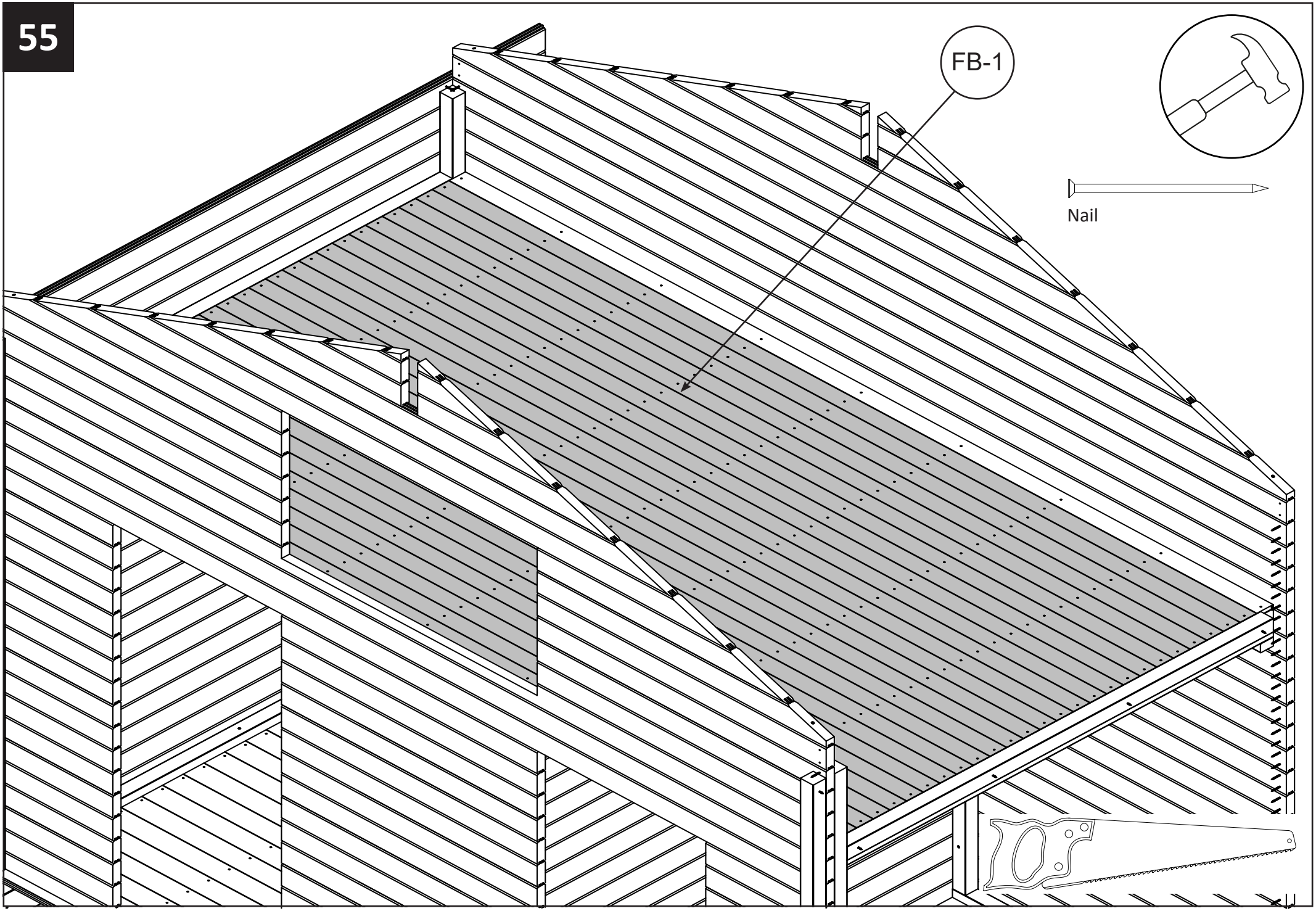
FB-1
Nail

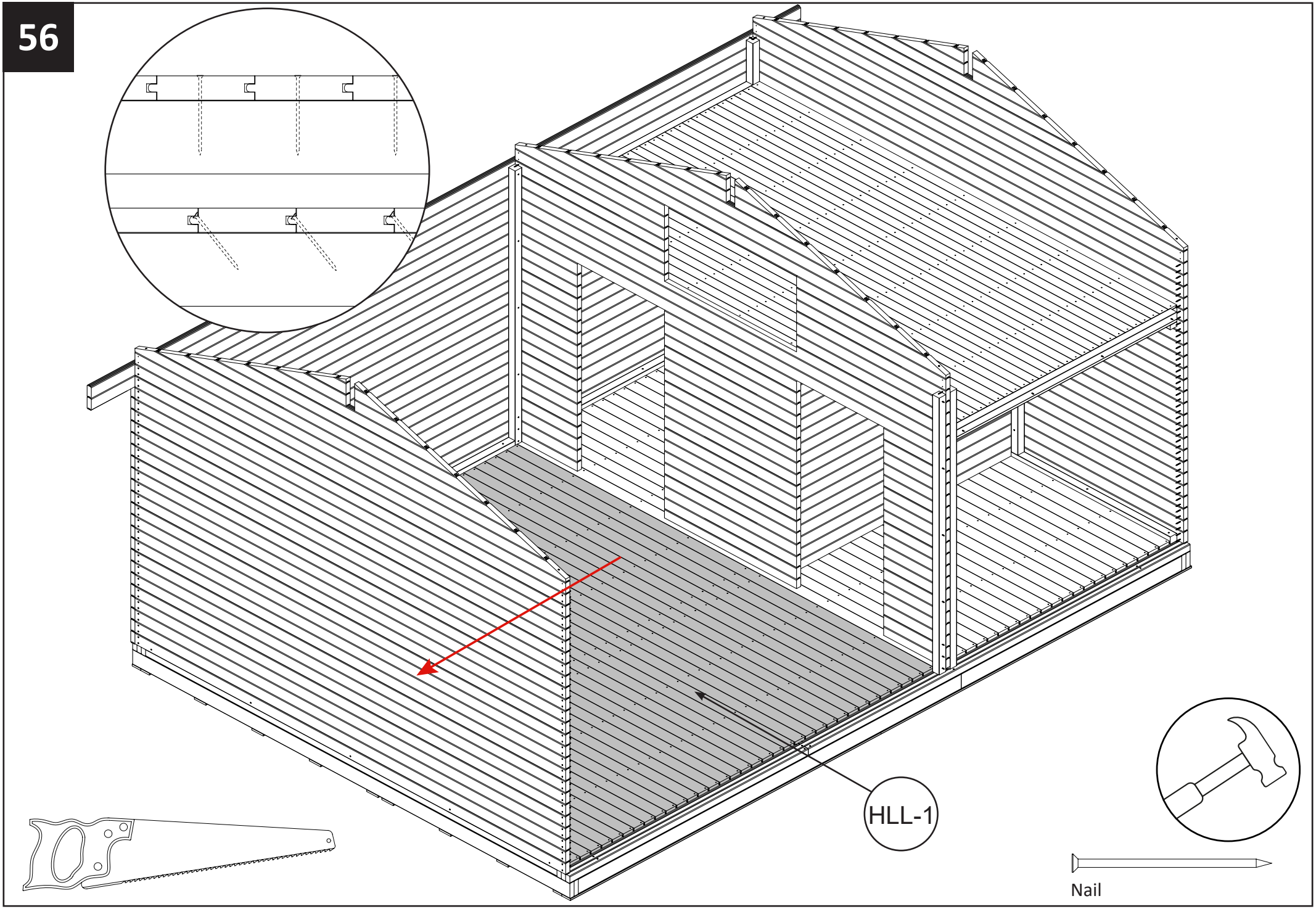
HLL-1
Nail

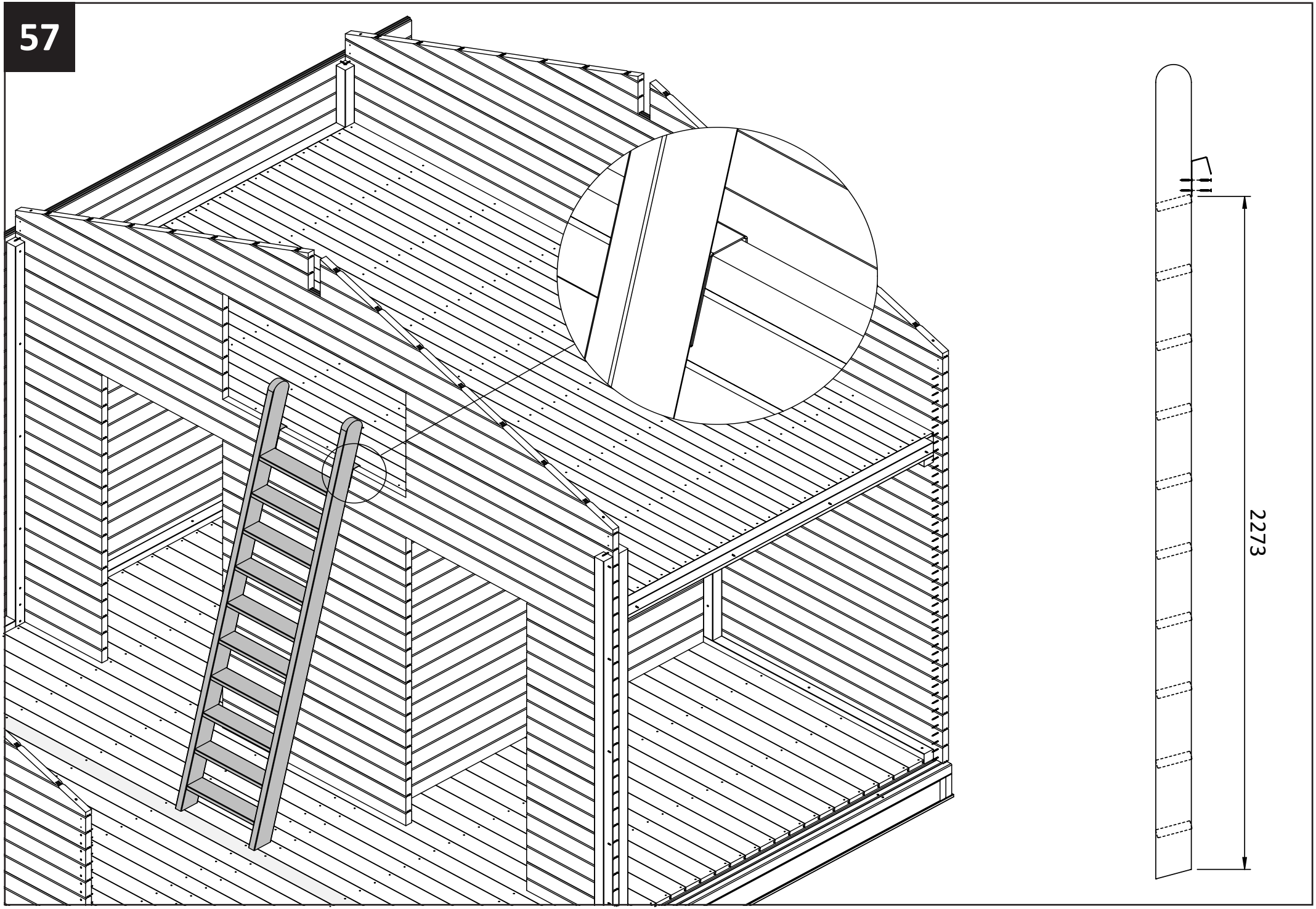
2273

**58**



60mm

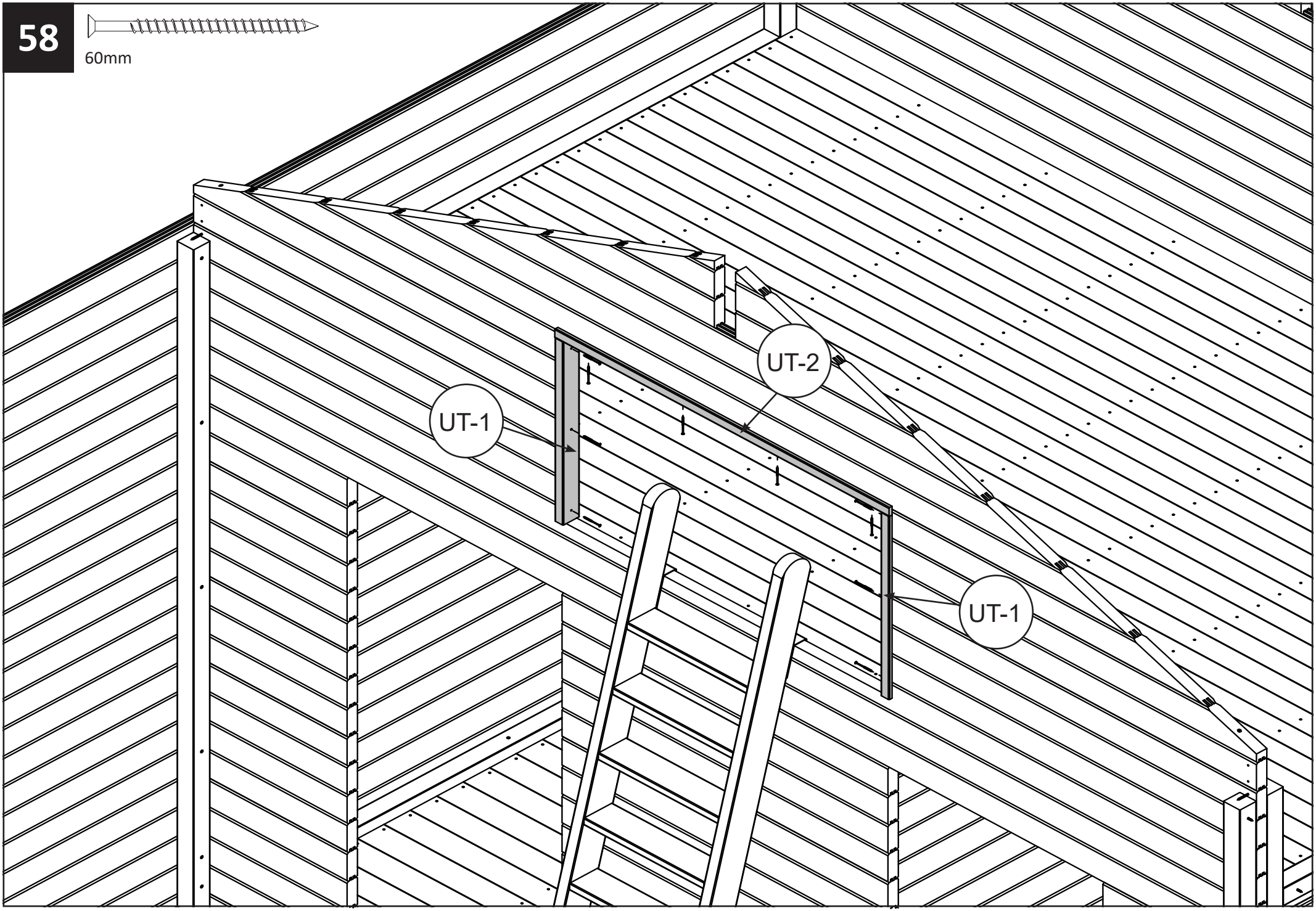

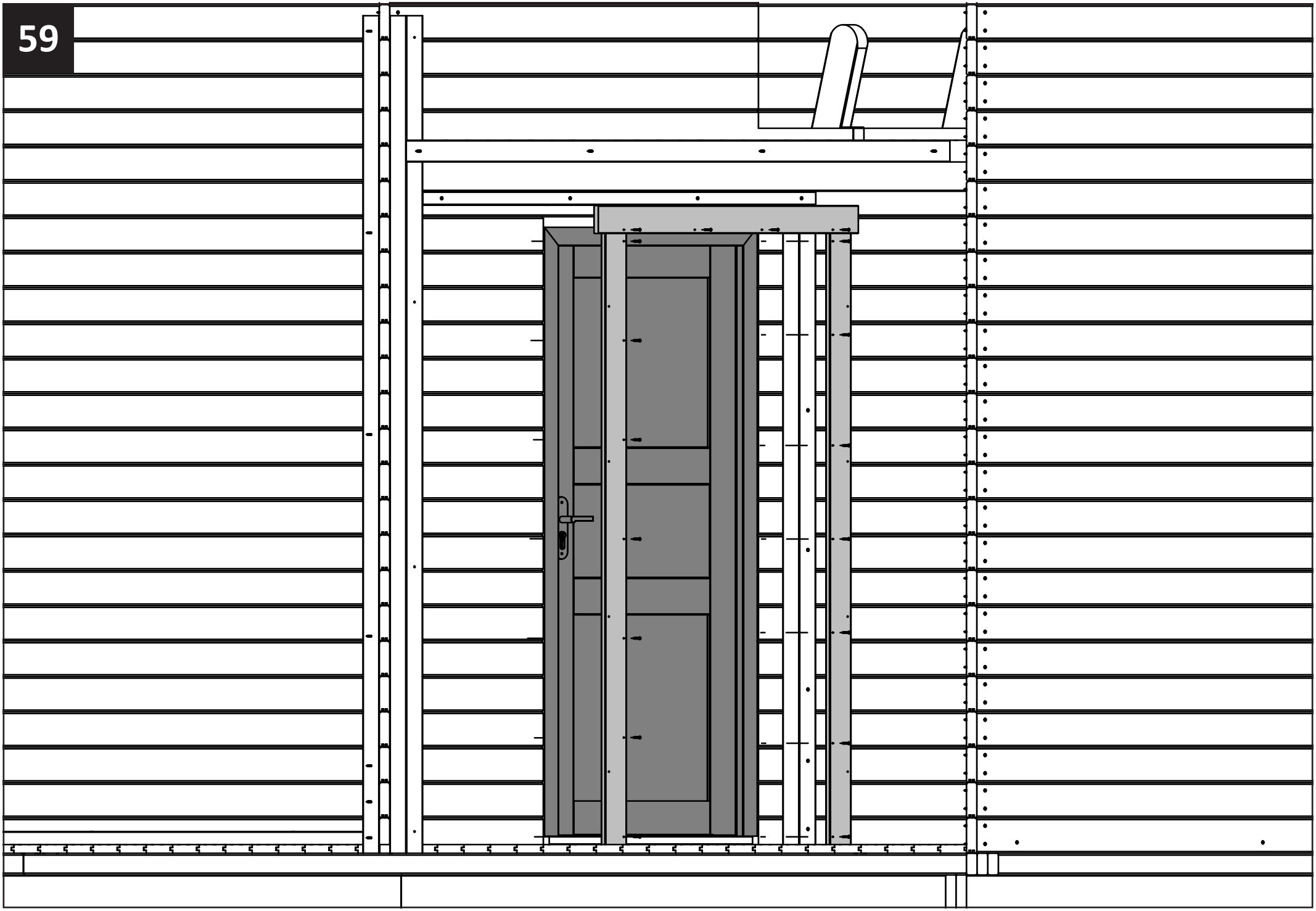

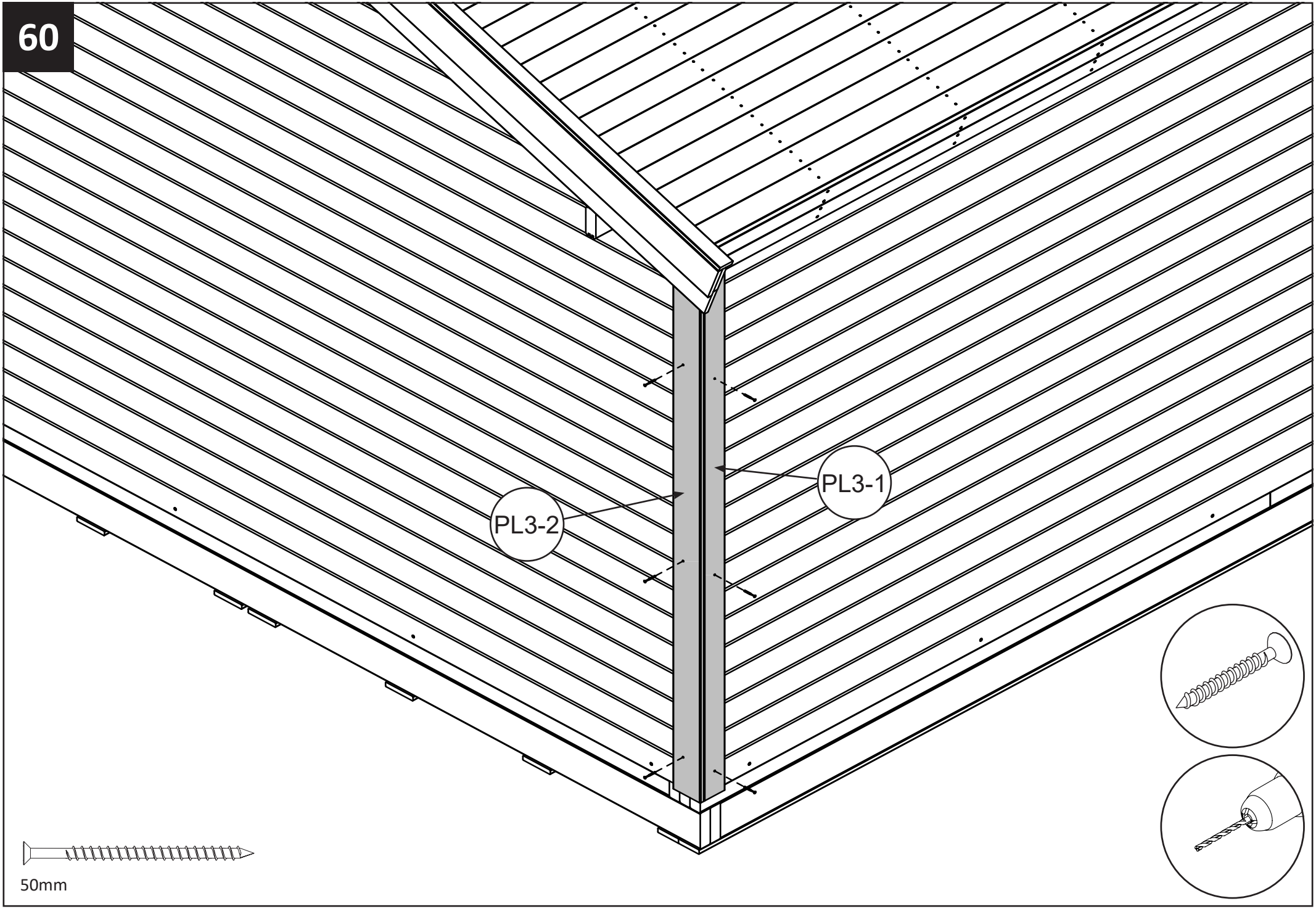
PL3-1
PL3-2
50mm