Sauna 160, Ø200

NB! Please read whole manual before start.

All given measurements are in millimeters!

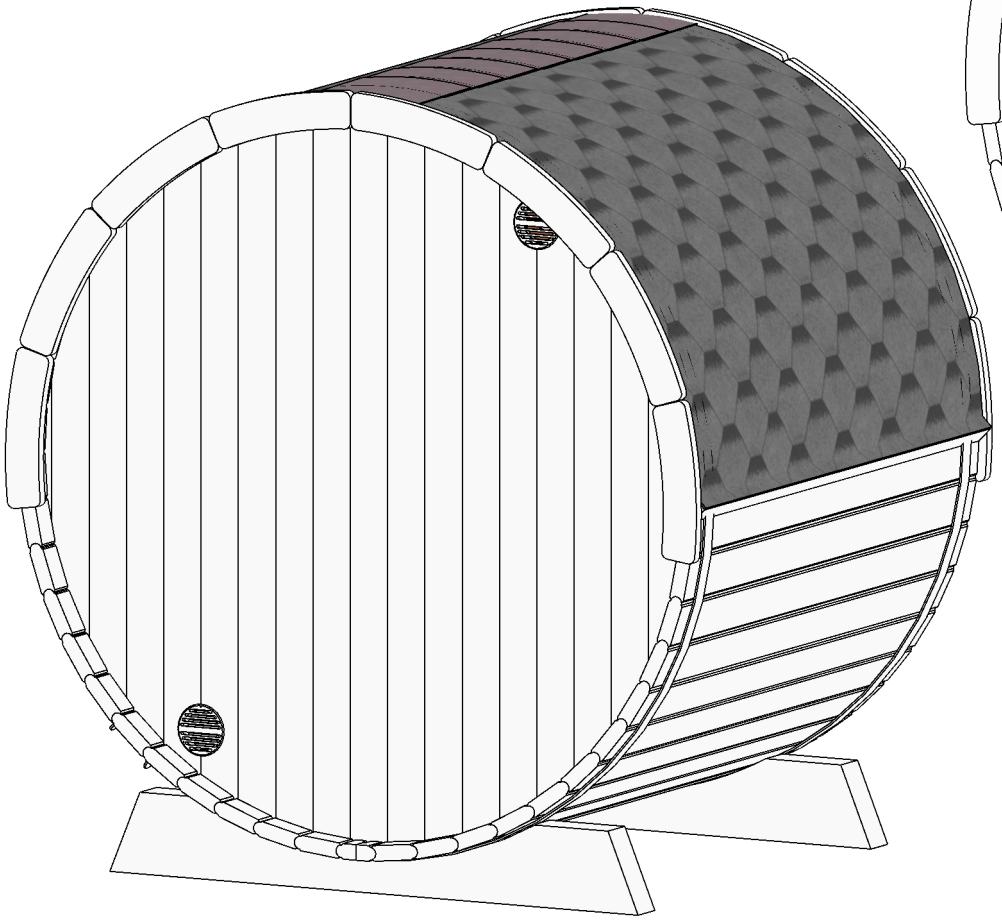

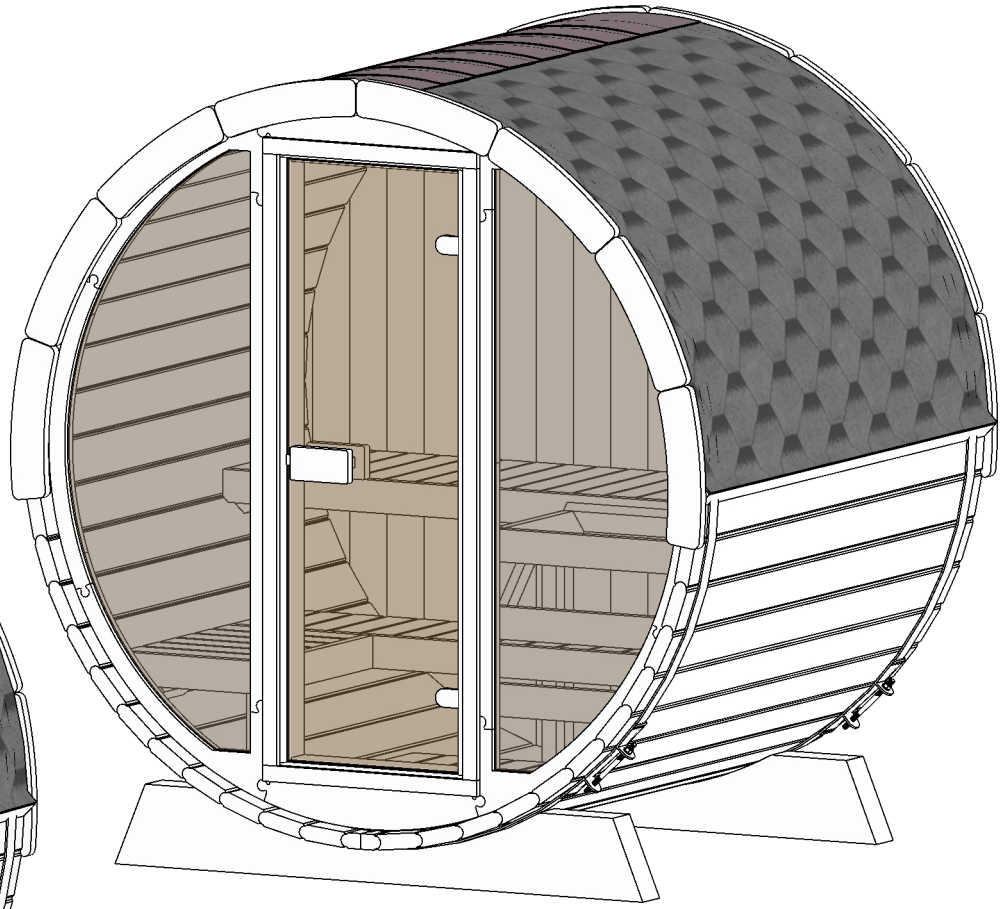

I20-TKE-PTS-013

Sauna 160, Ø200

Walls configuration.

(PES)

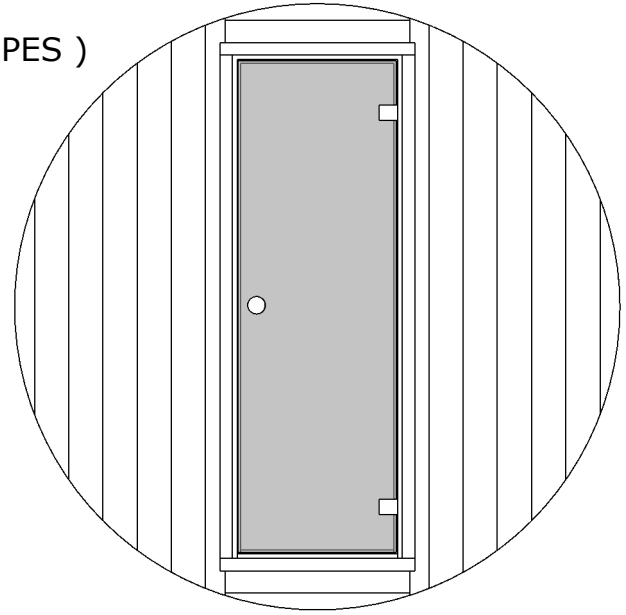

(TKE)

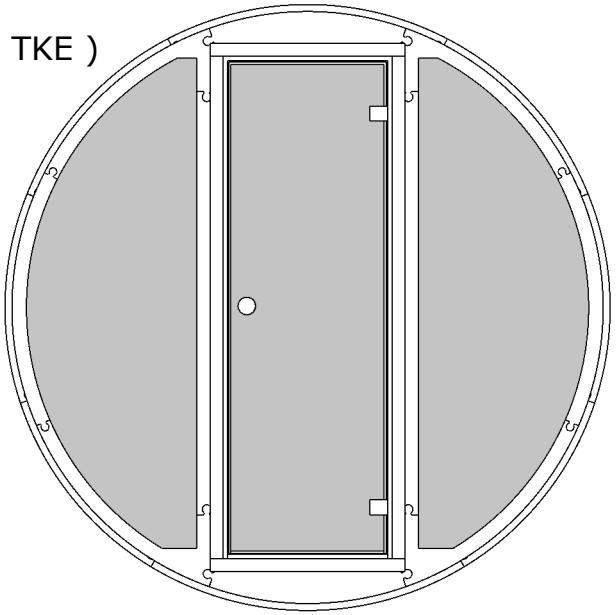

(PTS)

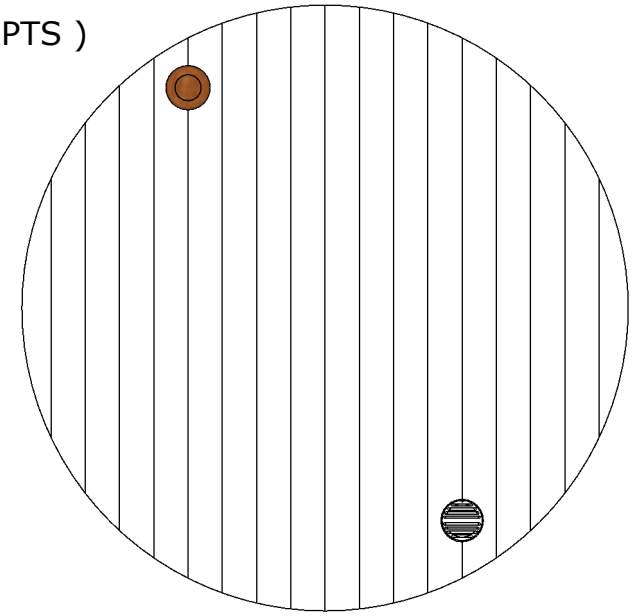

(PK)

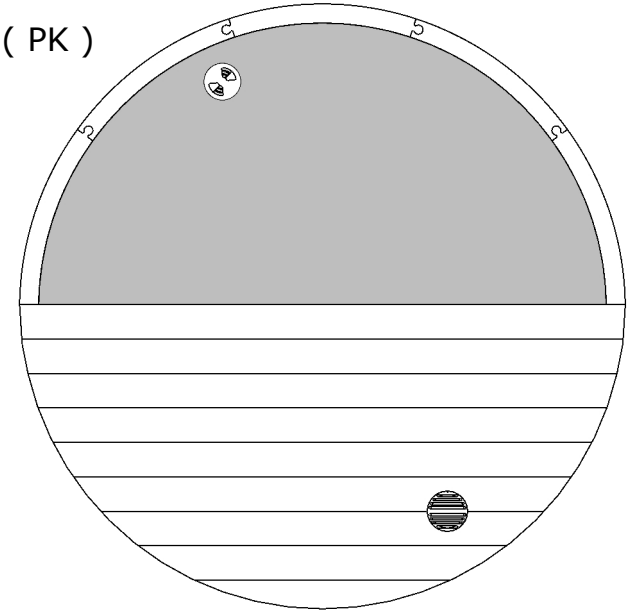

I20-TKE-PTS-013

Front glass wall installation Ø200

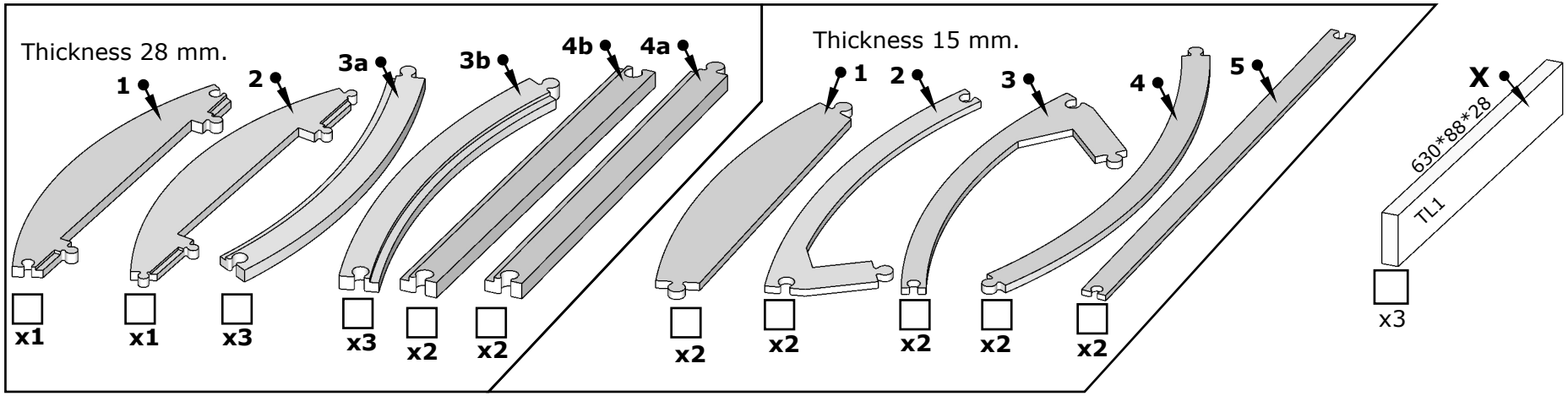

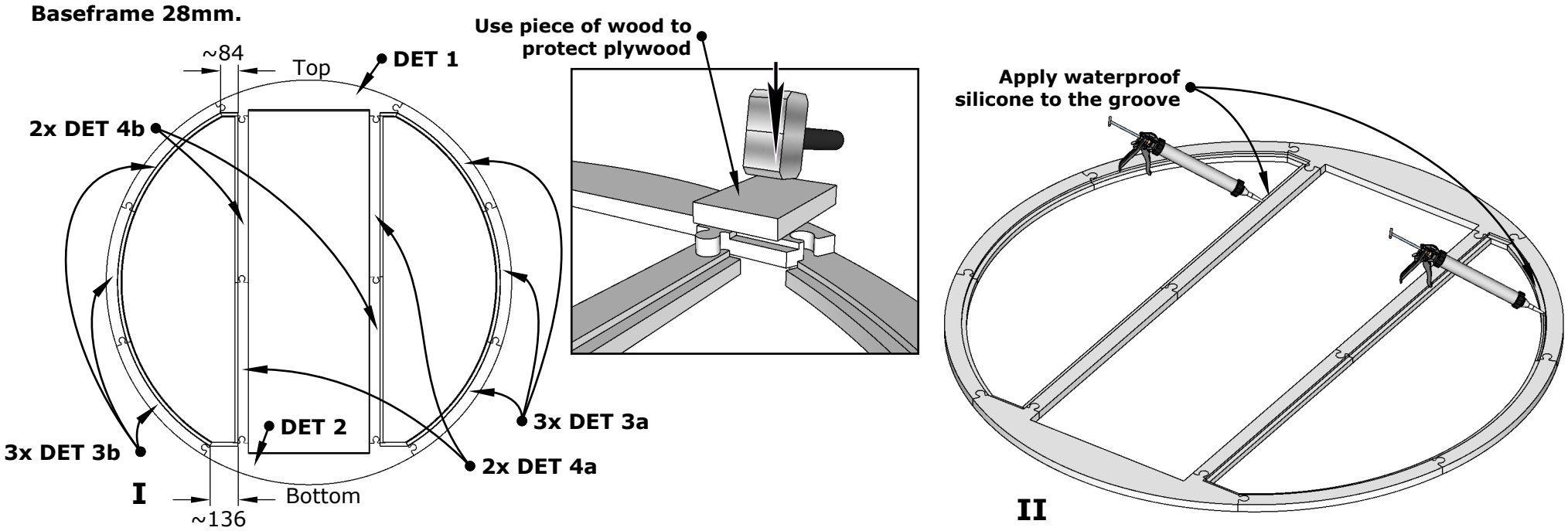

I20-TKE-PTS-013

Front glass wall installation Ø200

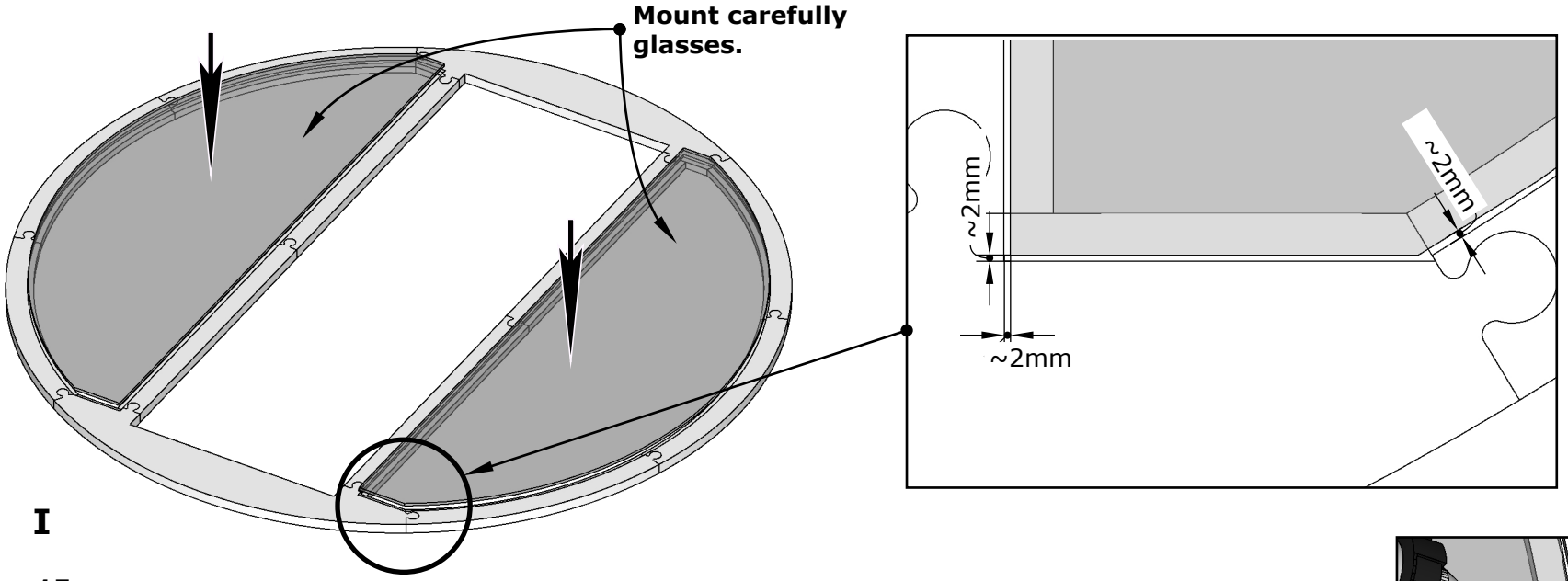

I

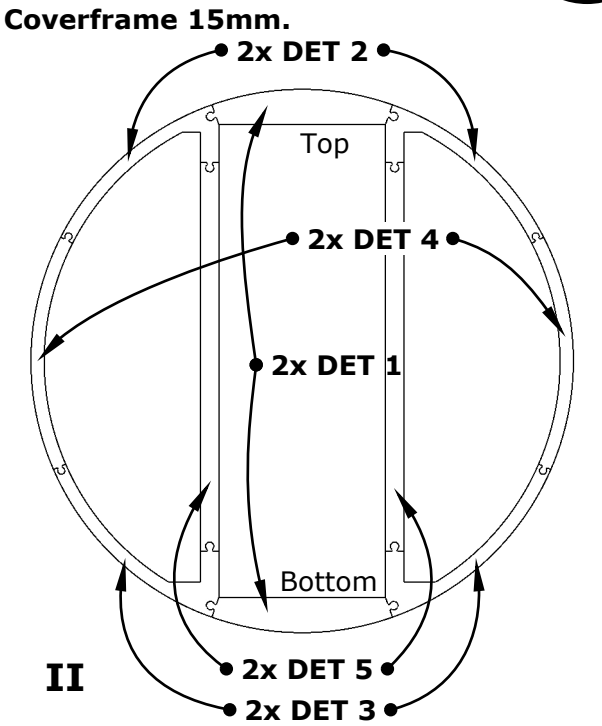

II

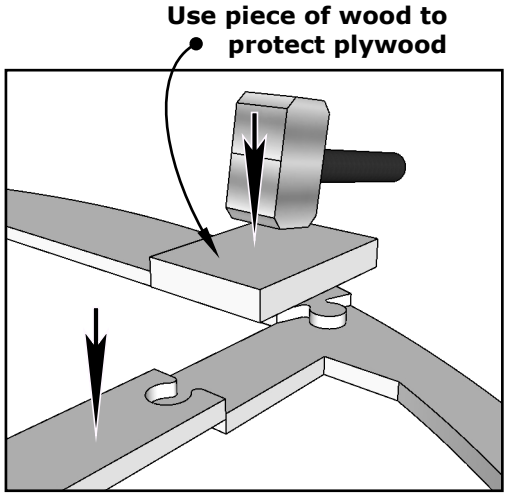

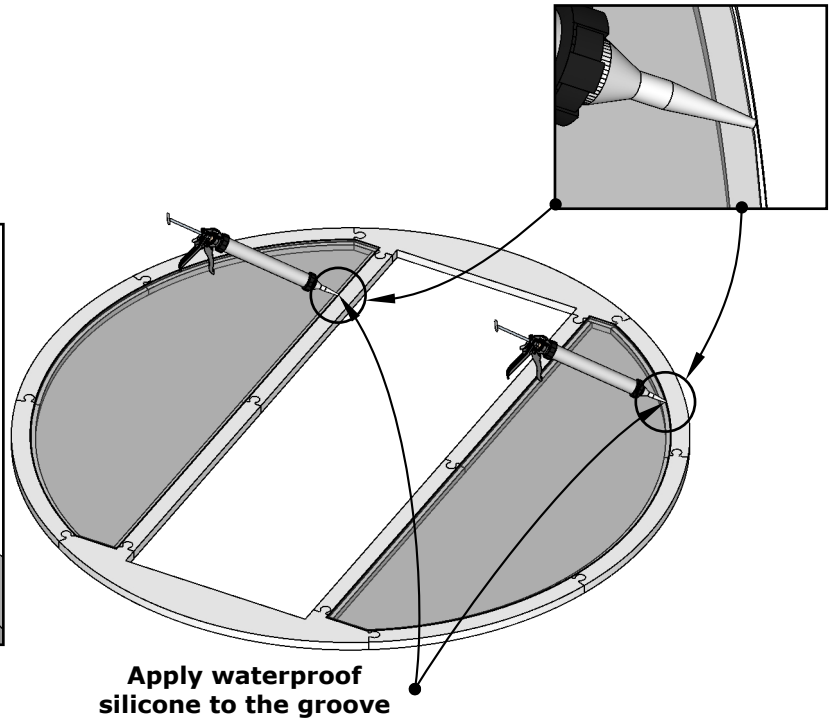

III

Front glass wall installation Ø200

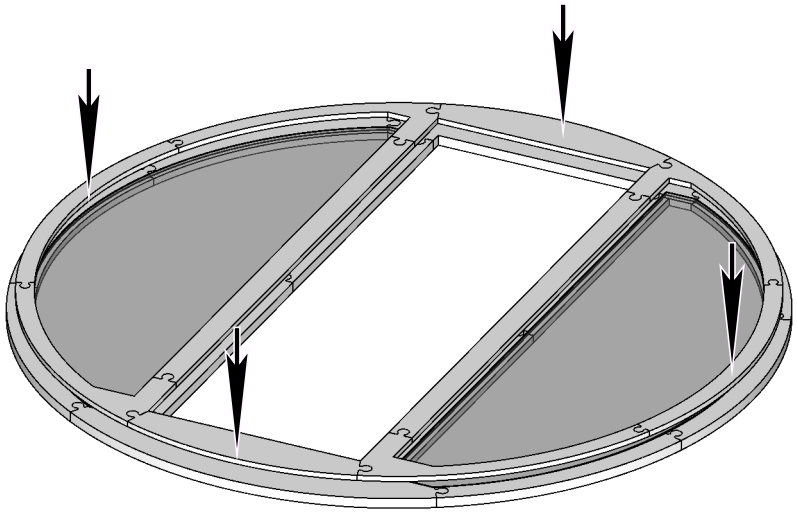

I

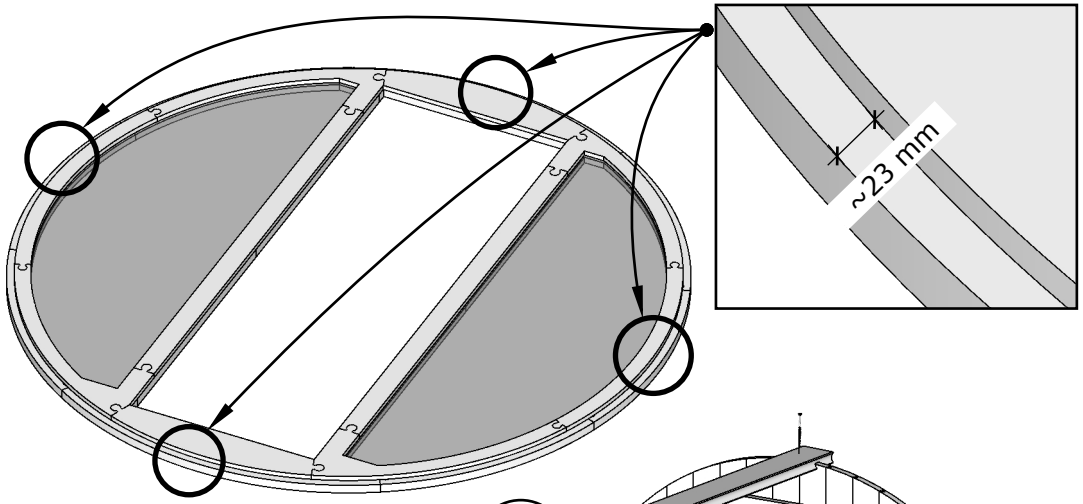

II

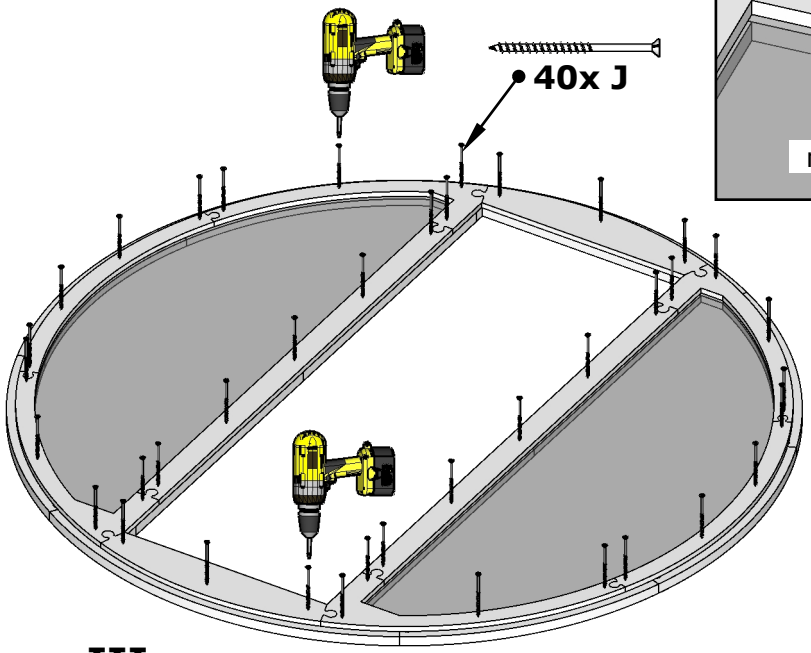

III

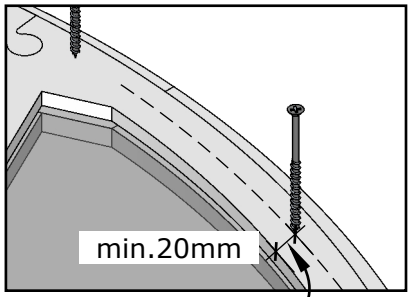

CAUTION!
Do not hit the glass with the screw.

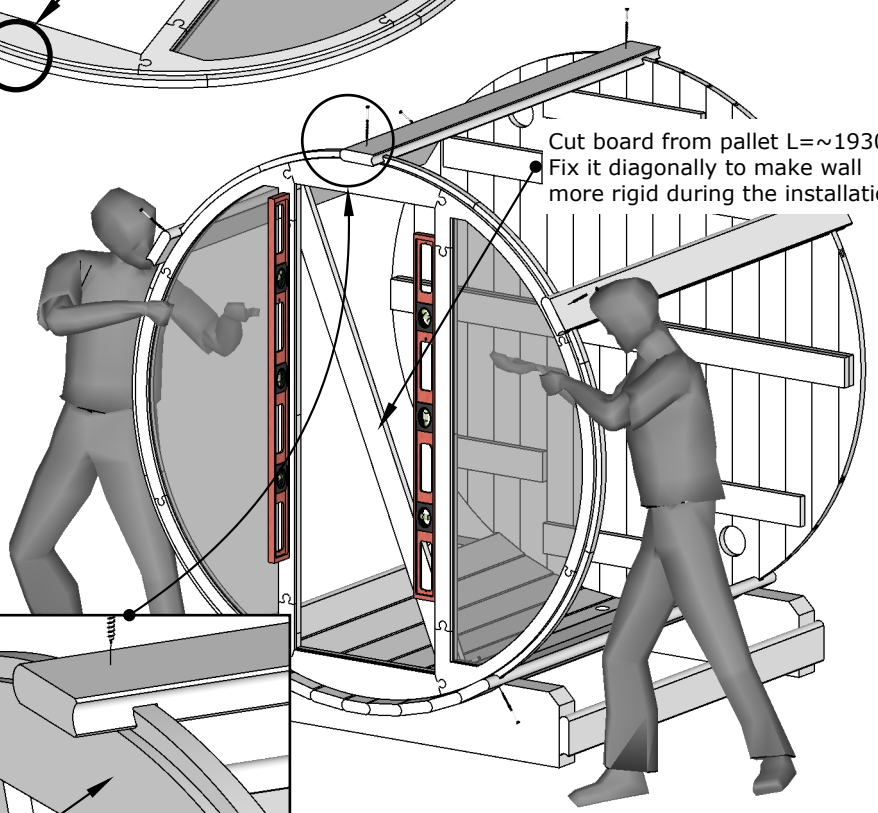

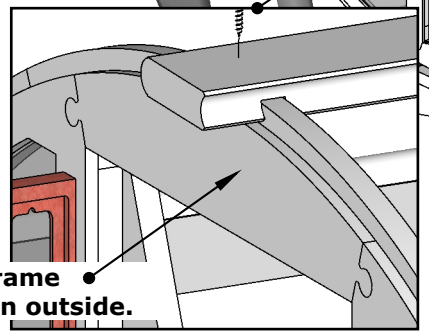

NB! Cover frame MUST remain outside.

IV

Install front glass-wall same way as instructed in main manual.

Front glass wall installation Ø200

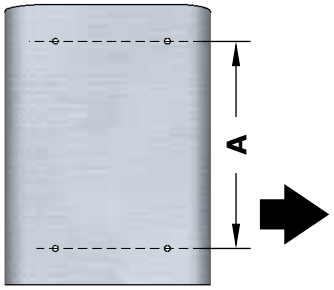

NB! Check Your el.heater user manual to find correct measurements and cut DET X to the correct size.

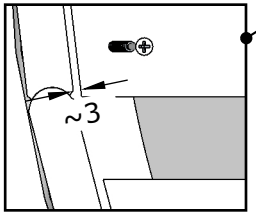

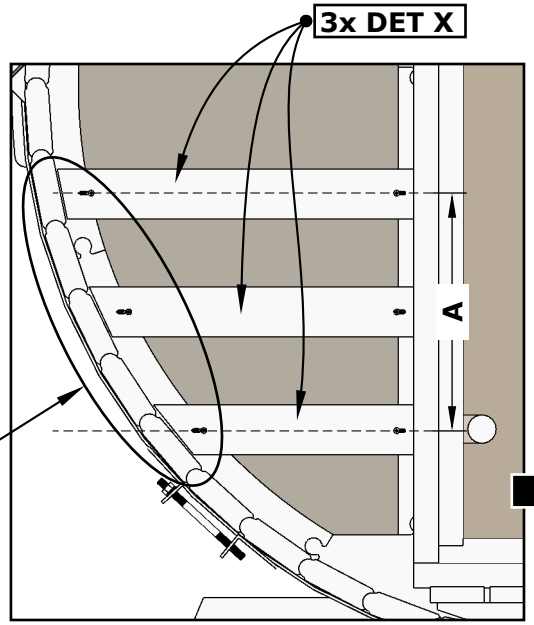

I

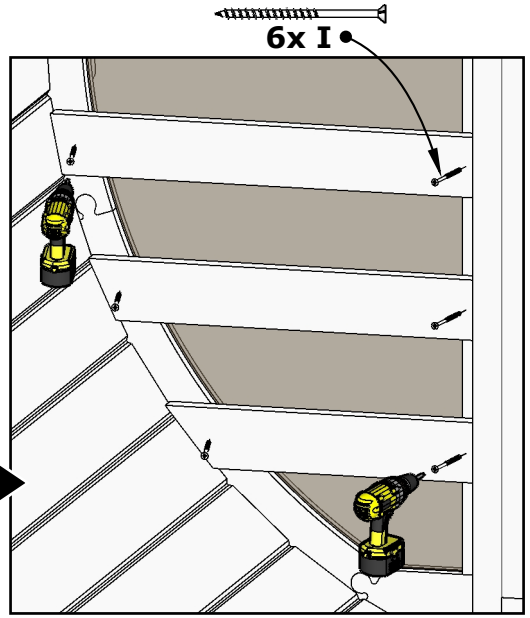

NB! Be careful, do not hit the glass!

Proceed with main installation manual!

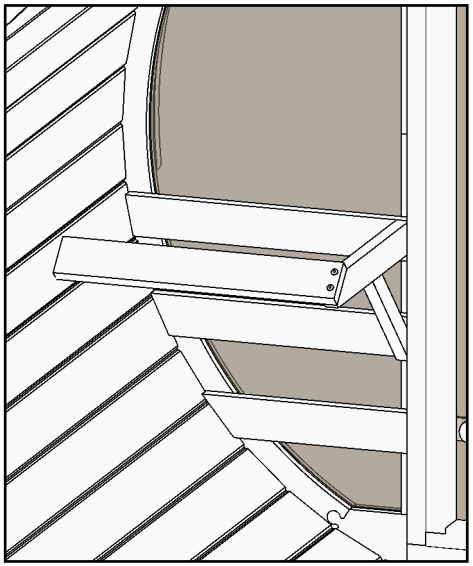

Wooden back wall assembly

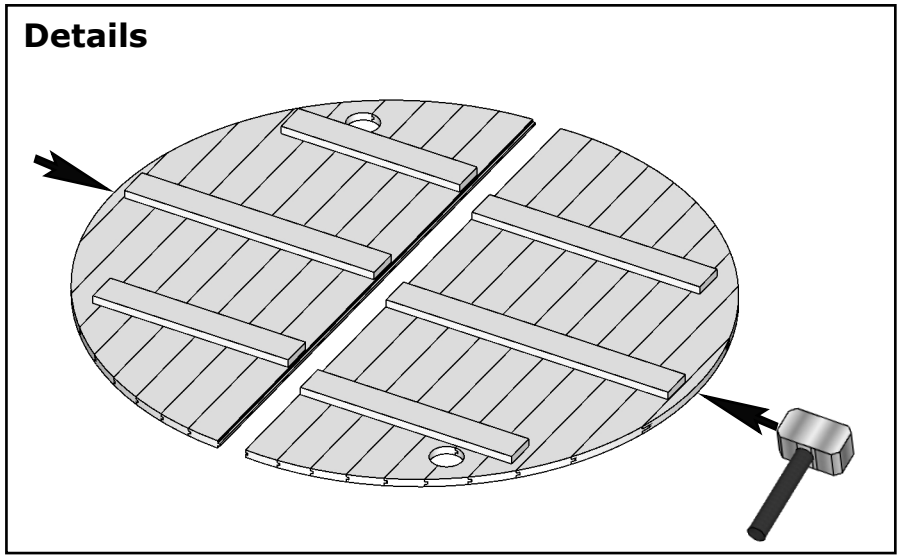

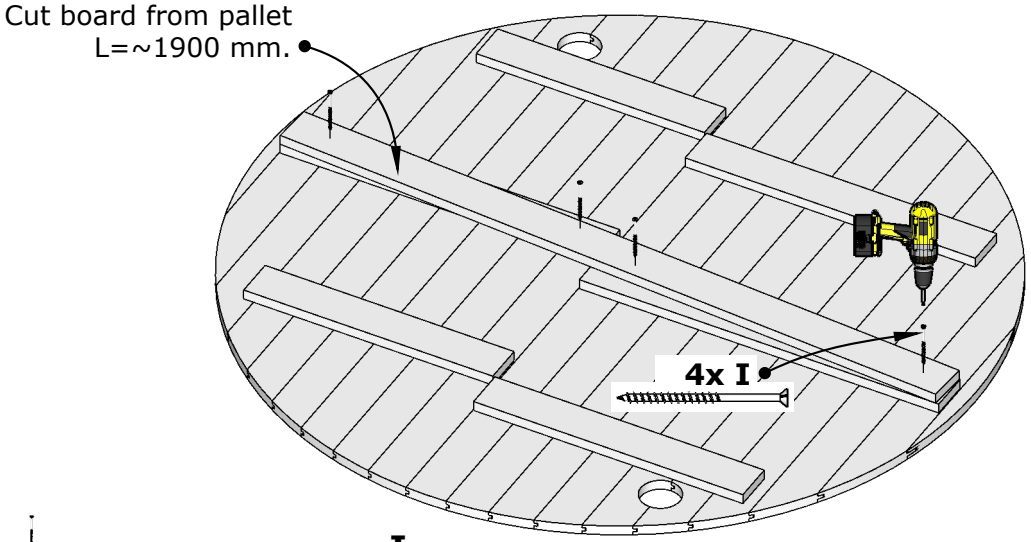

I

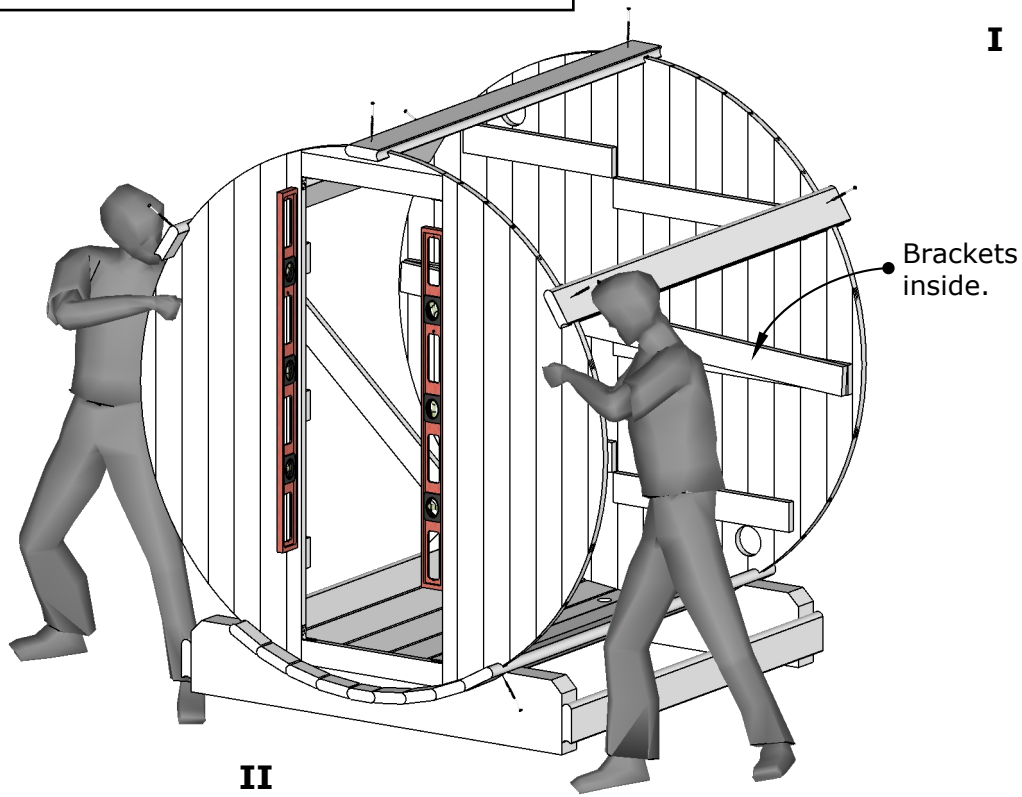

II

I20-TKE-PTS-013

Sauna 160, Ø200

Details list.

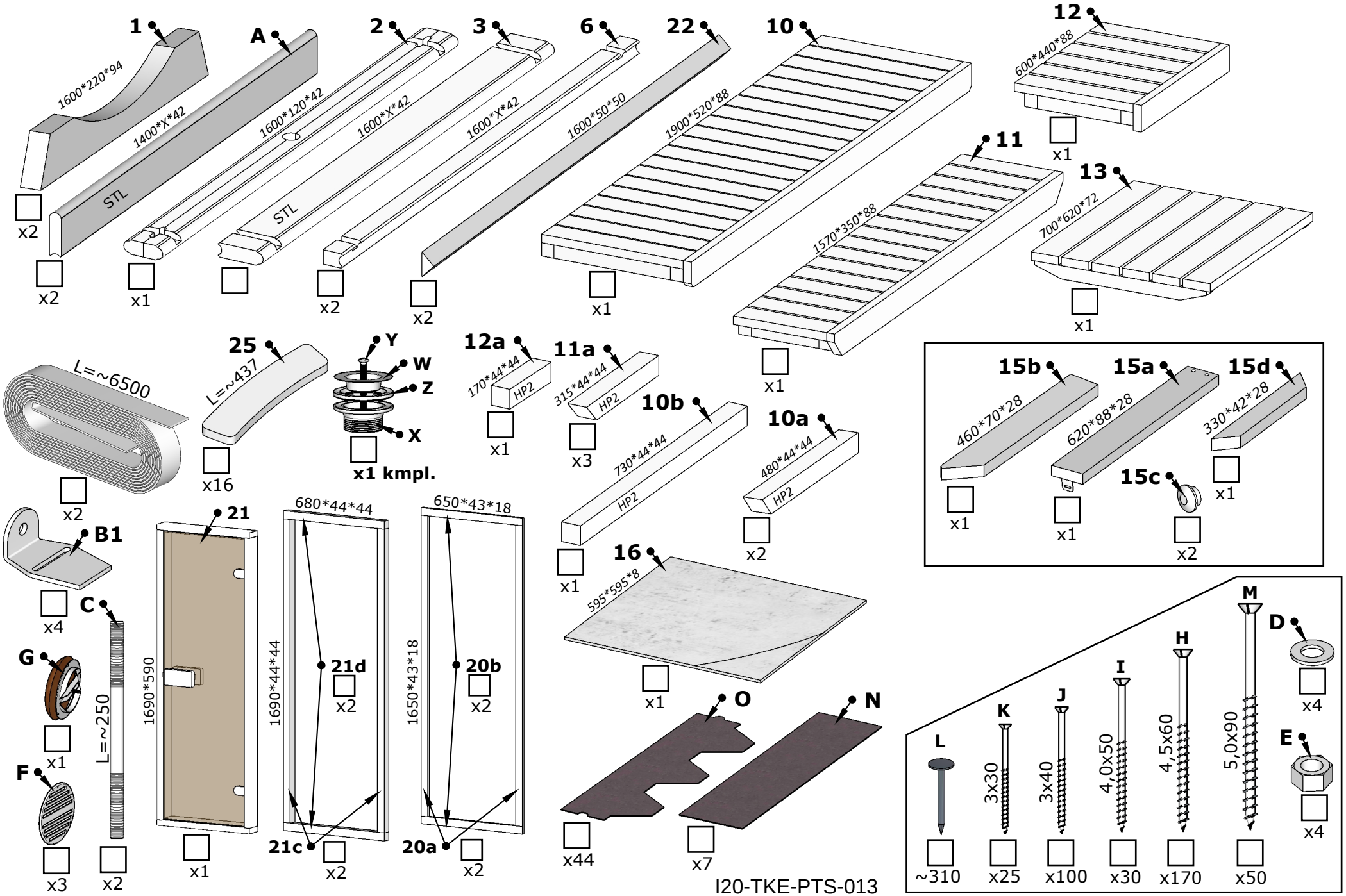

I20-TKE-PTS-013

Sauna 160, Ø200

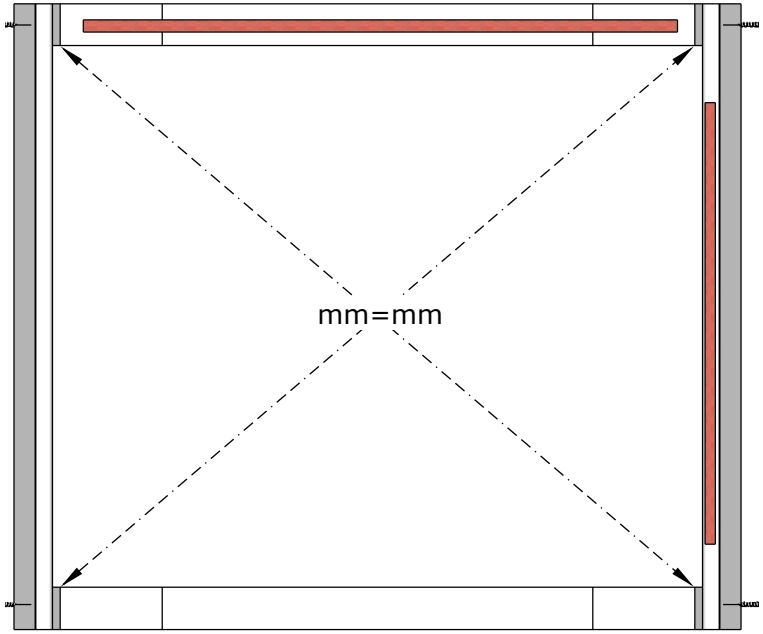

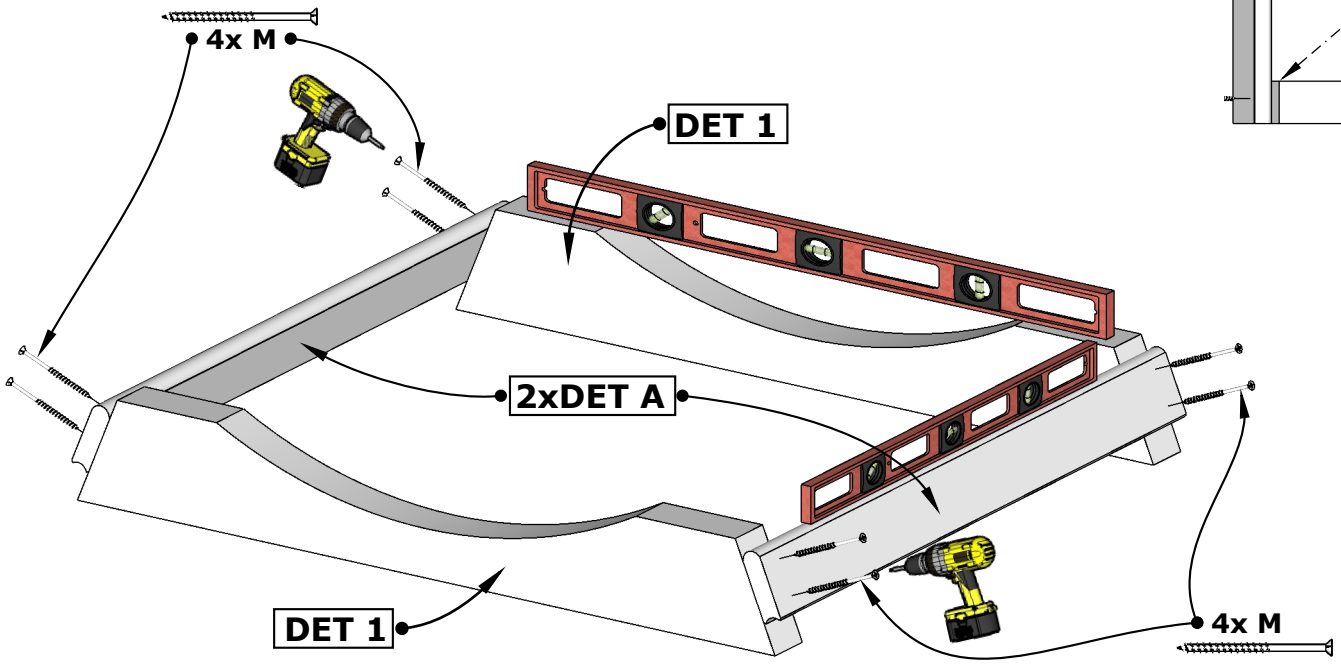

1.

Sauna 160, Ø200

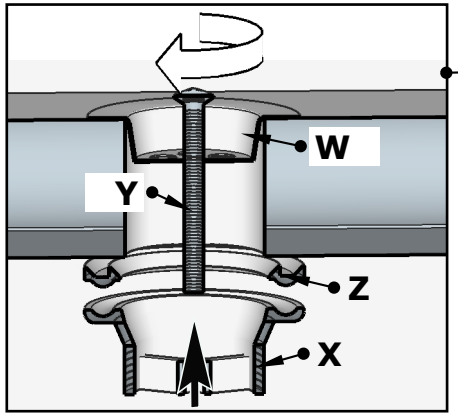

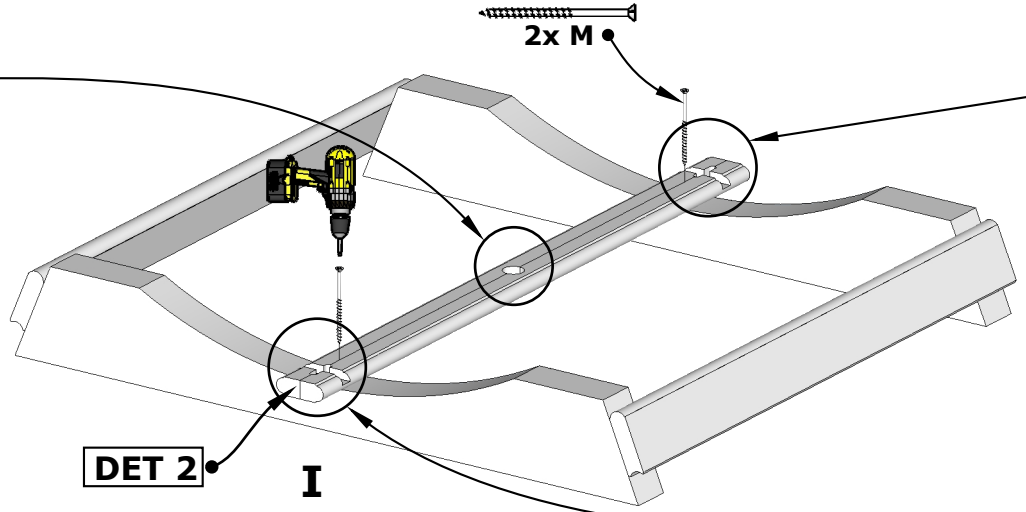

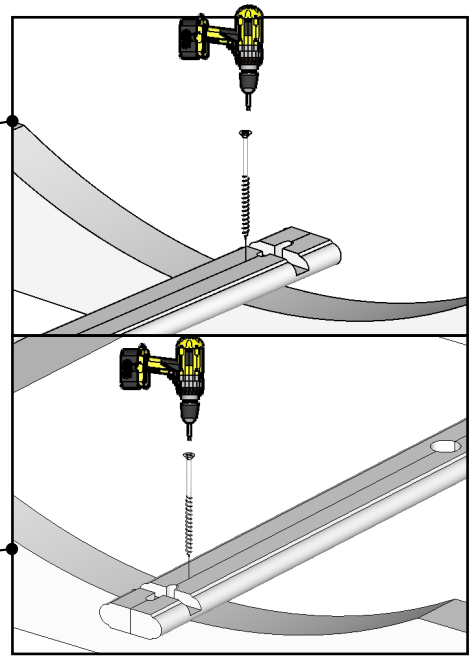

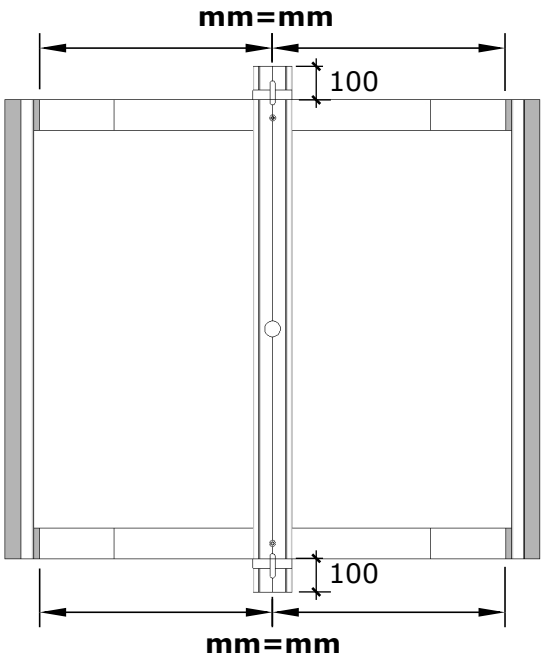

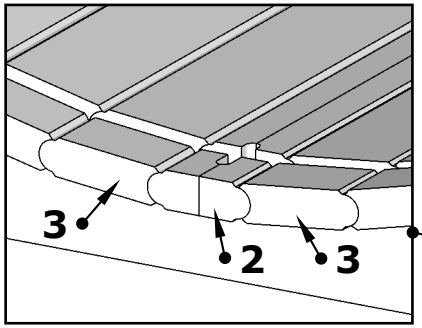

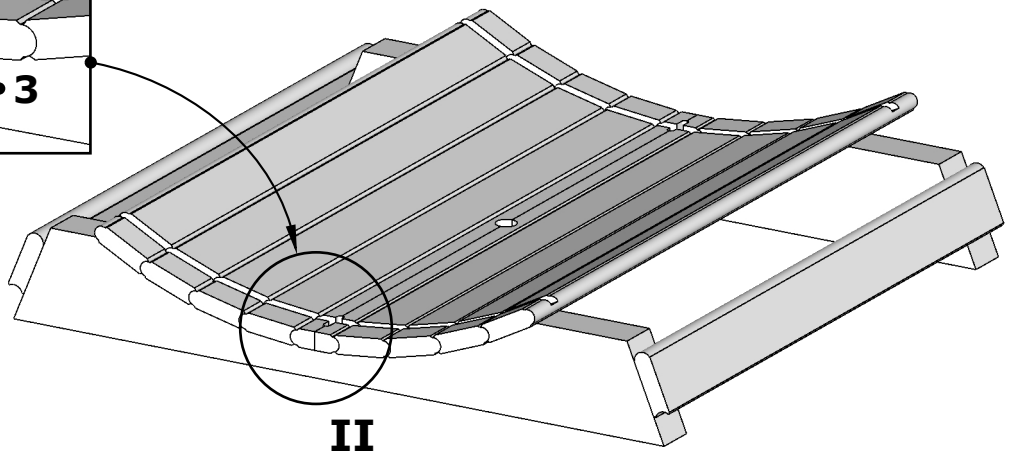

Sauna 160, Ø200

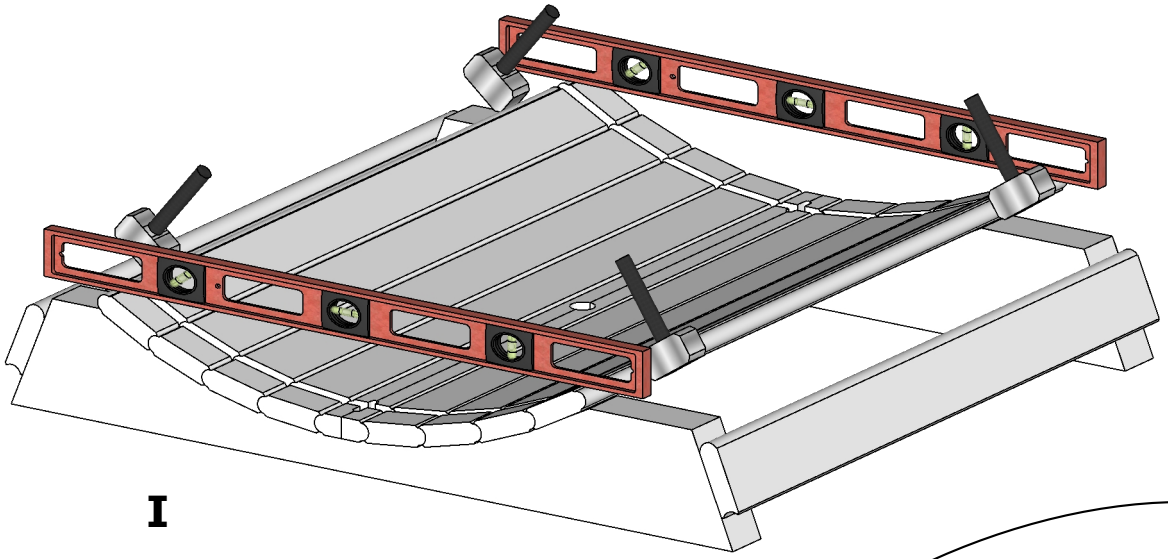

I

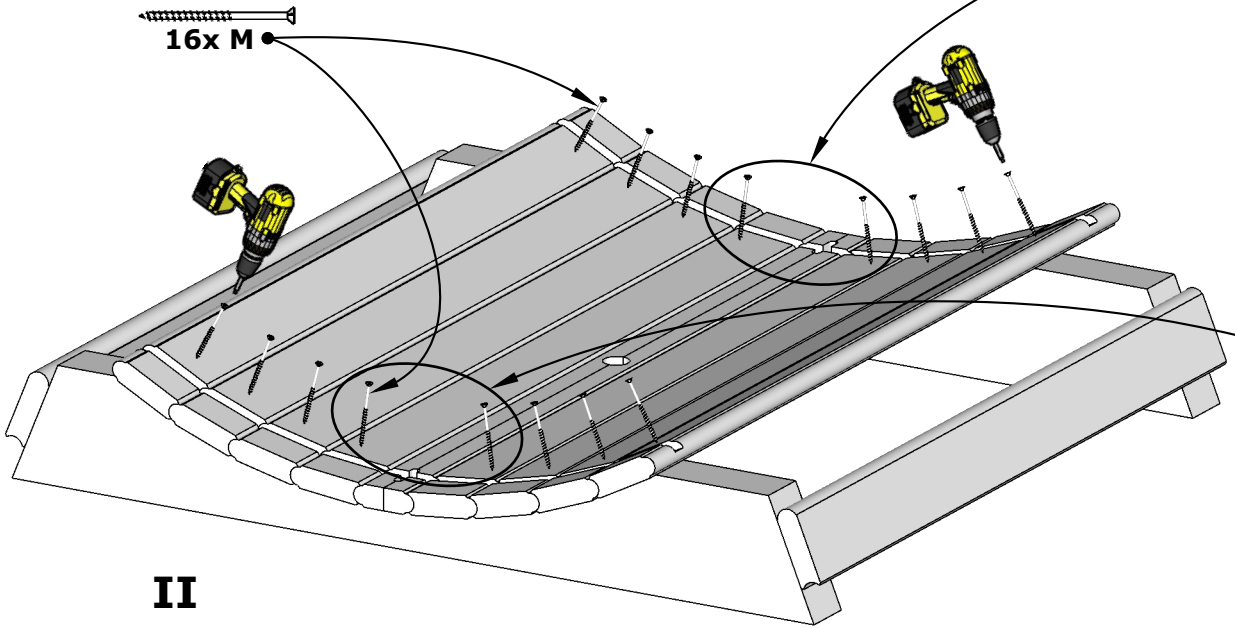

II

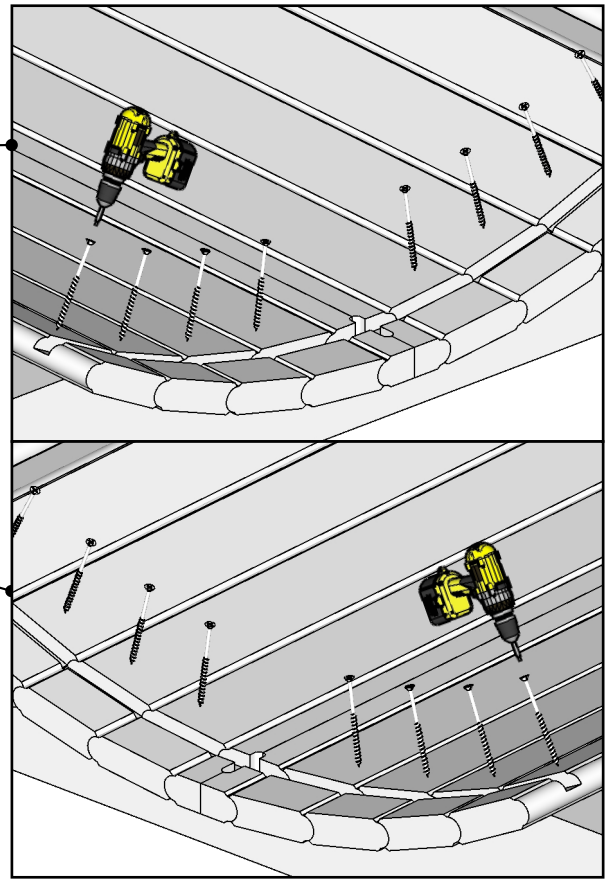

Sauna 160, Ø200

Use waterlevel

Check walls installation manual on extra pages!

Sauna wall configuration depends on Your model!

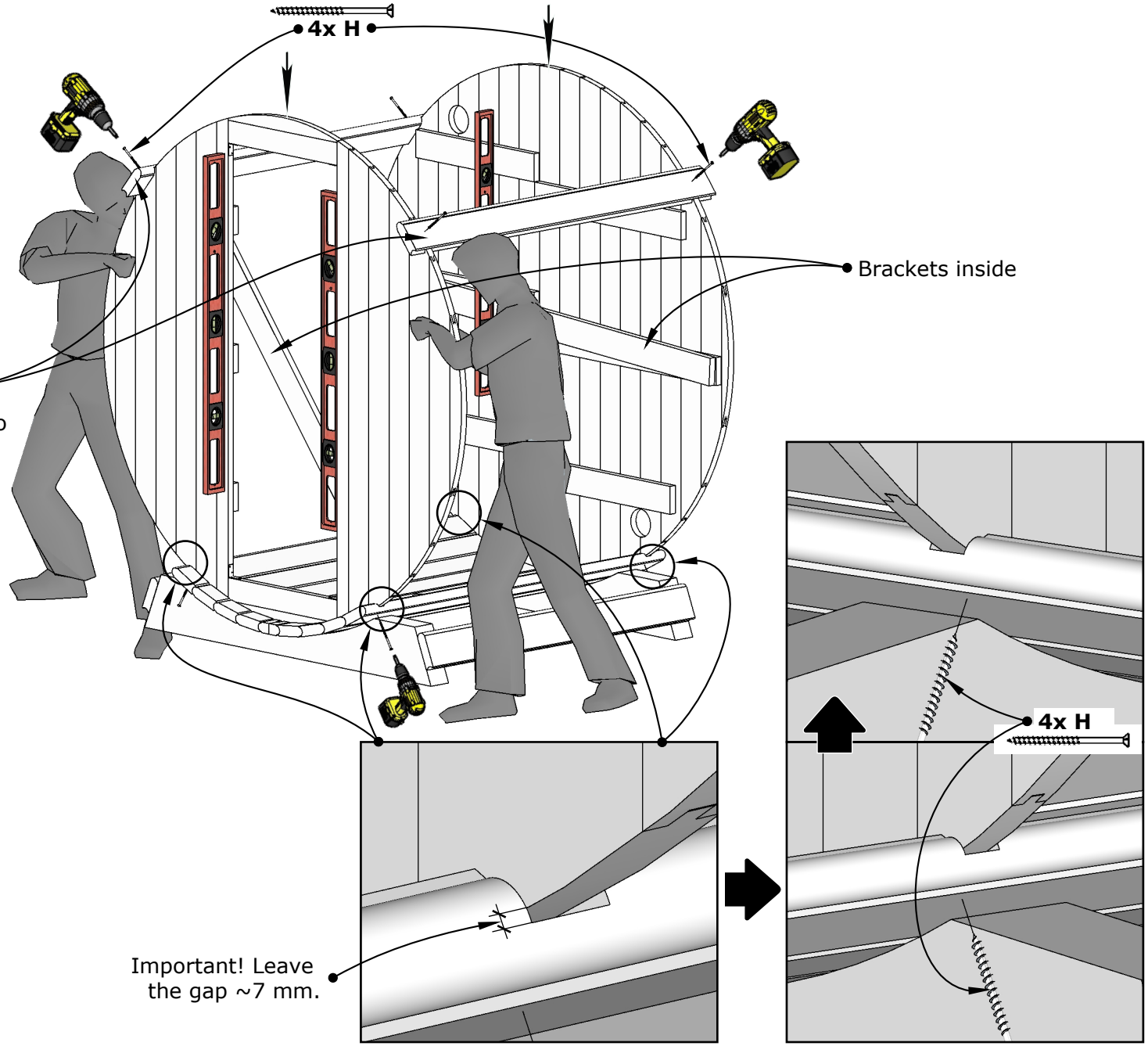

I20-TKE-PTS-013

Sauna 160, Ø200

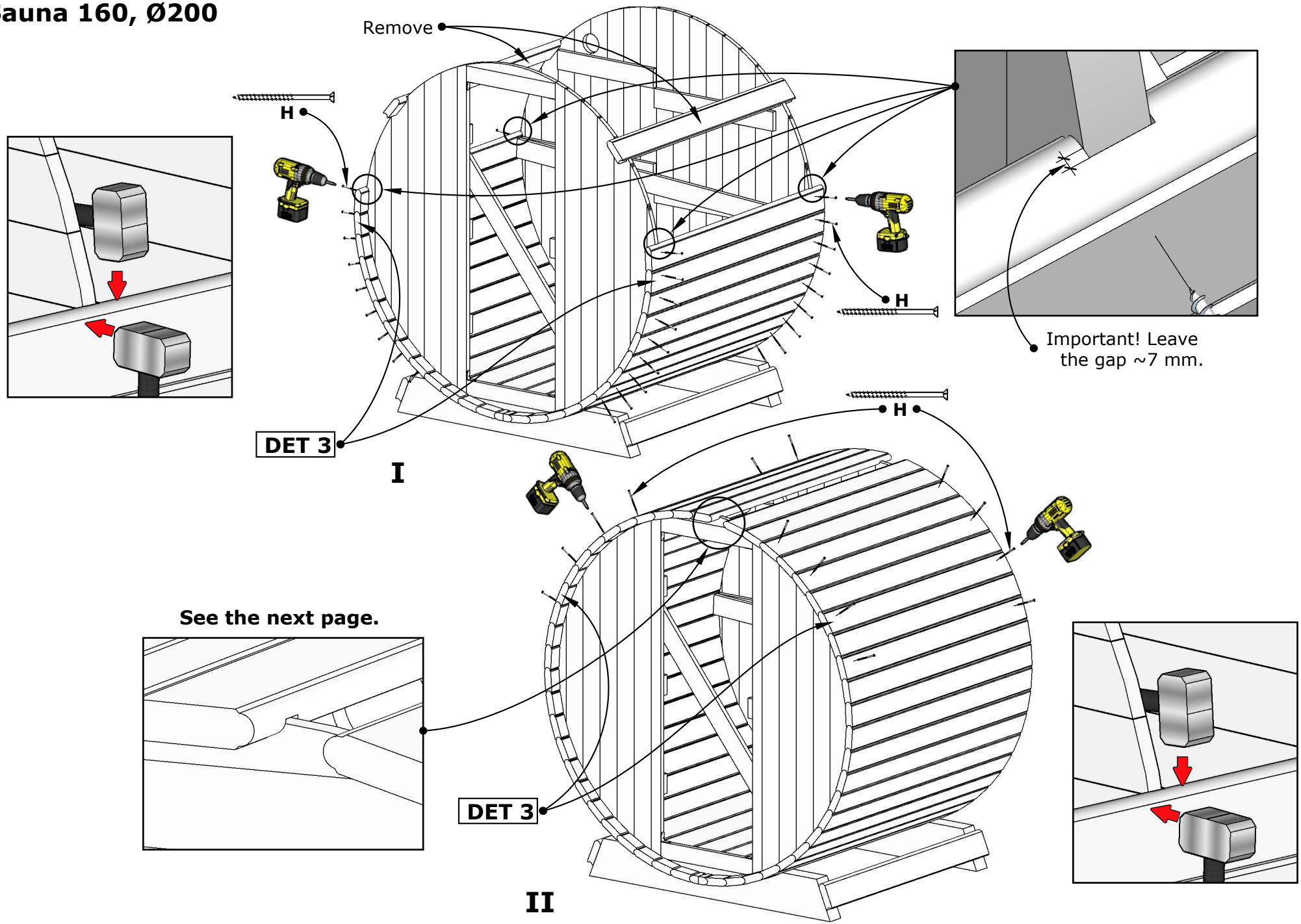

I20-TKE-PTS-013

Sauna 160, Ø200

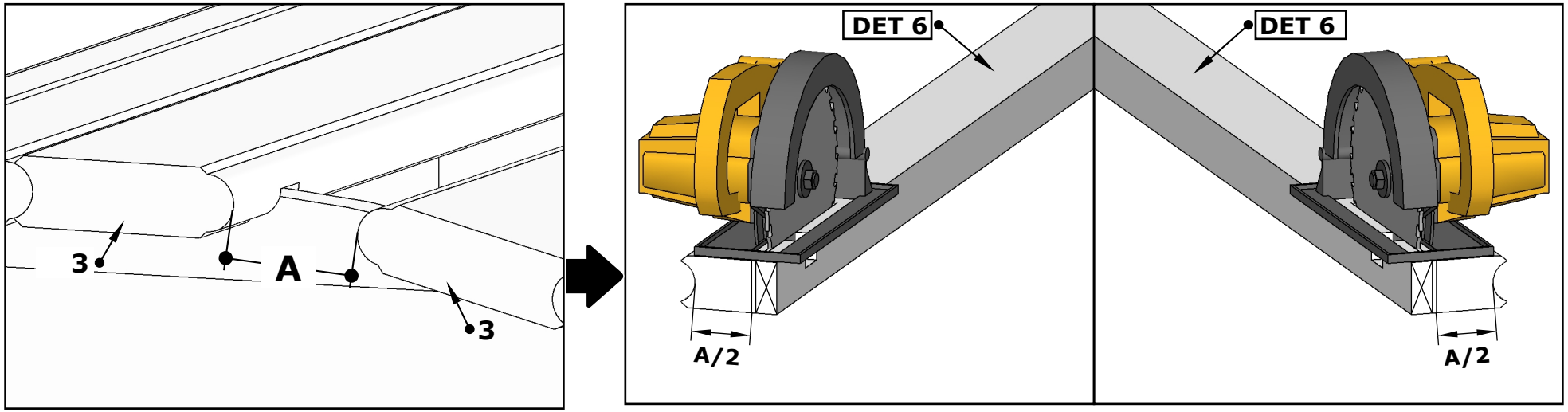

I

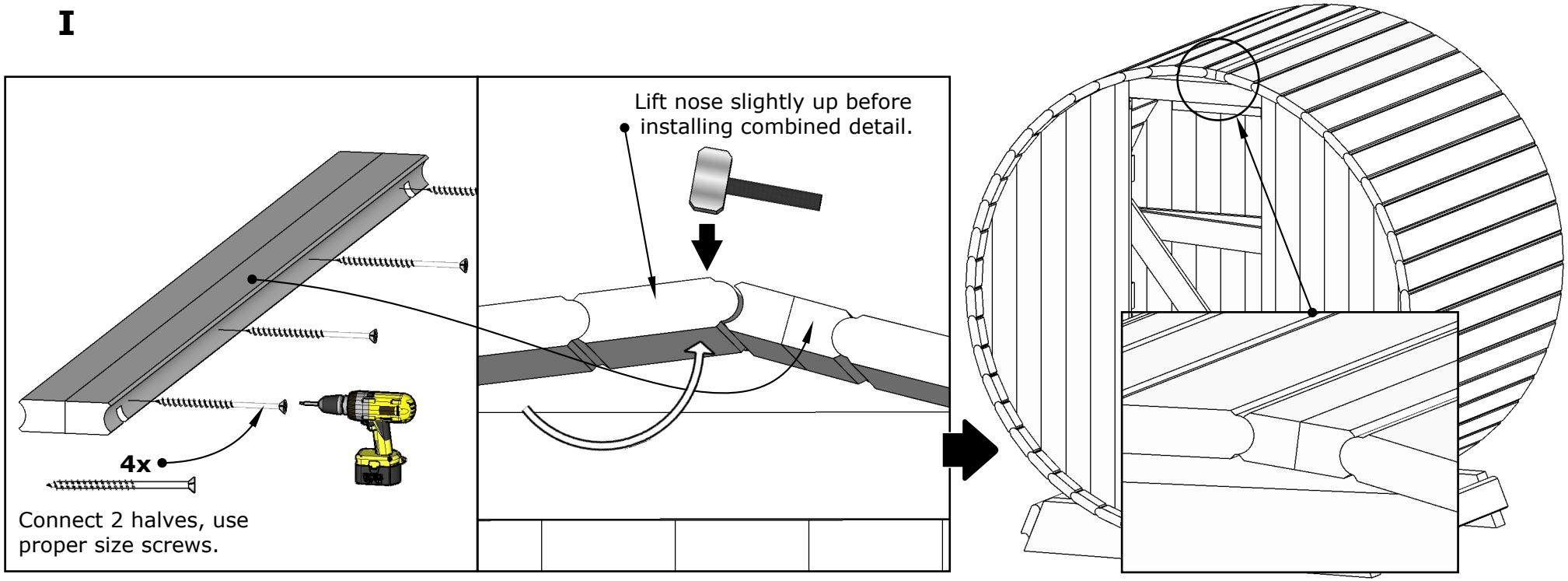

II

Sauna 160, Ø200

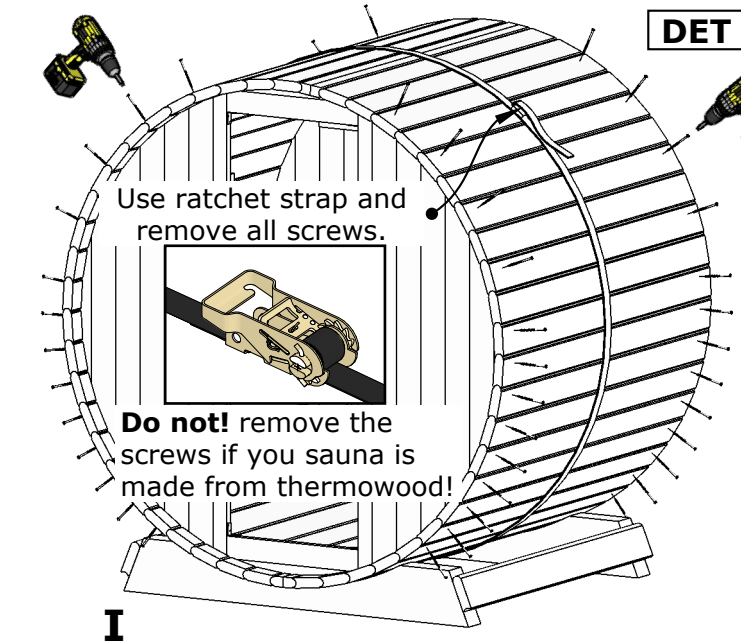

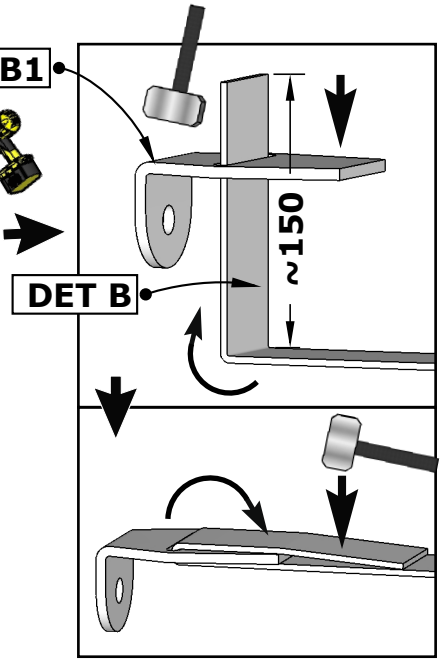

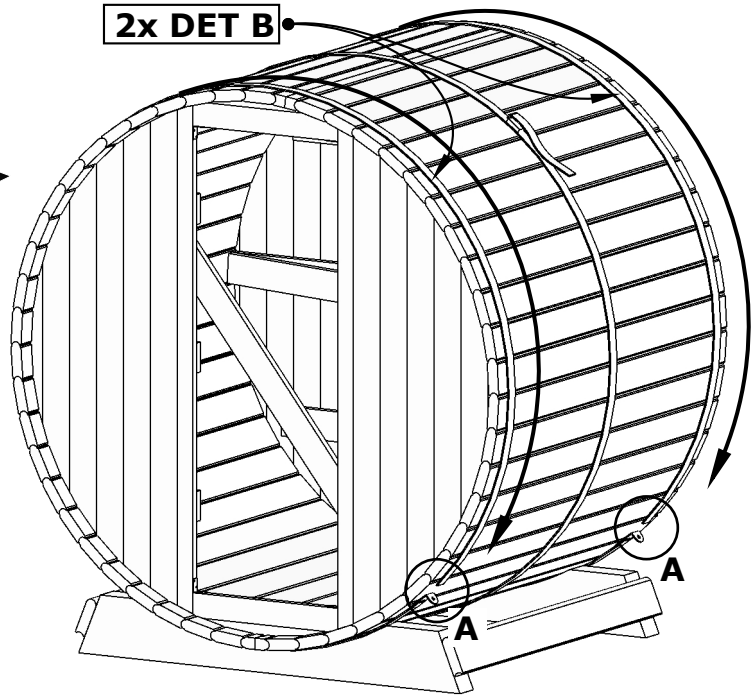

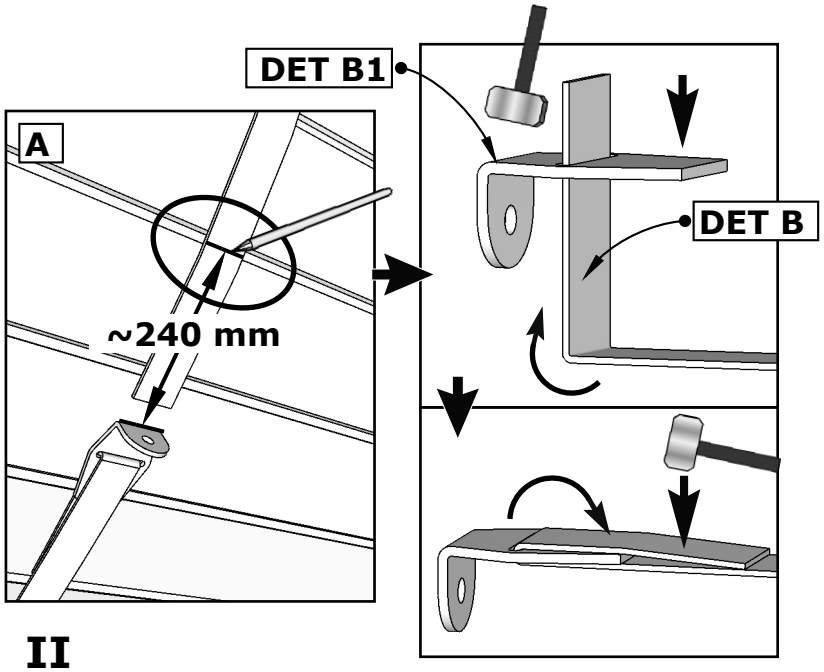

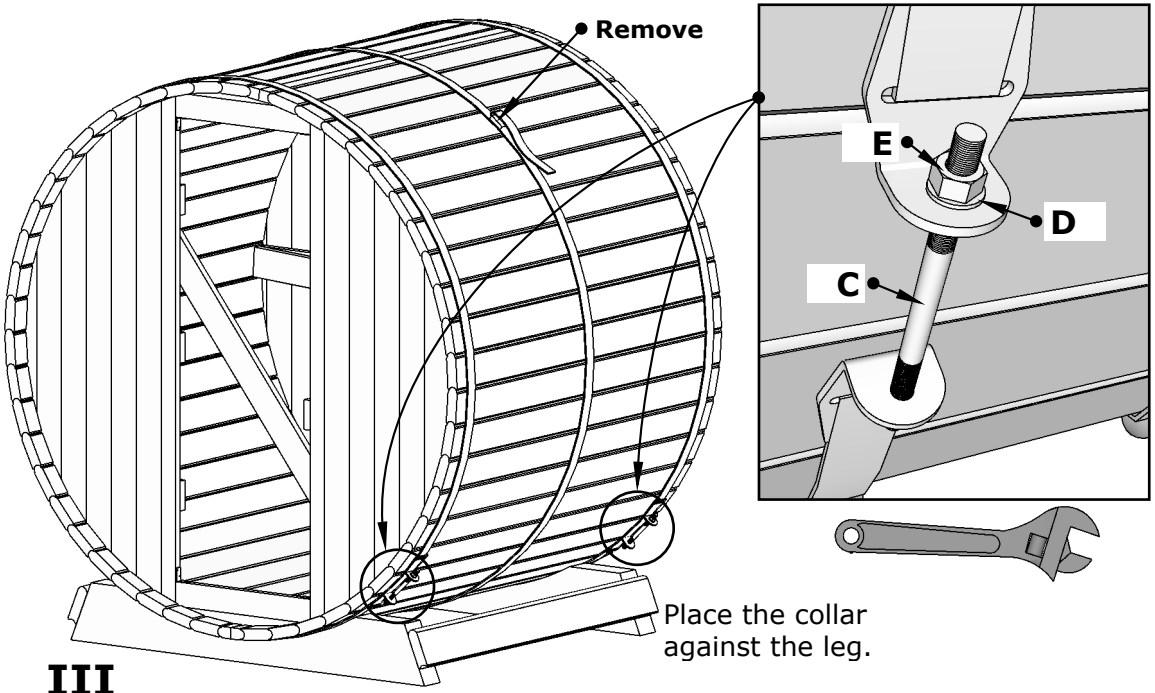

I20-TKE-PTS-013

Sauna 160, Ø200

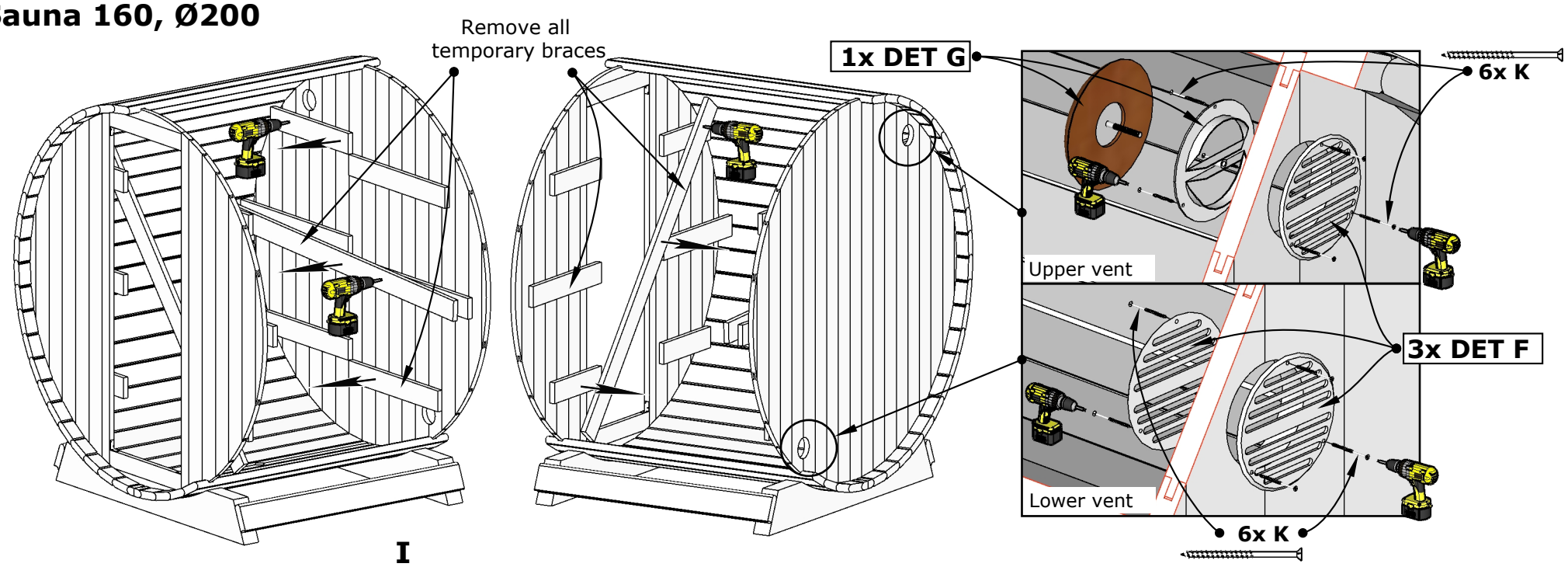

I

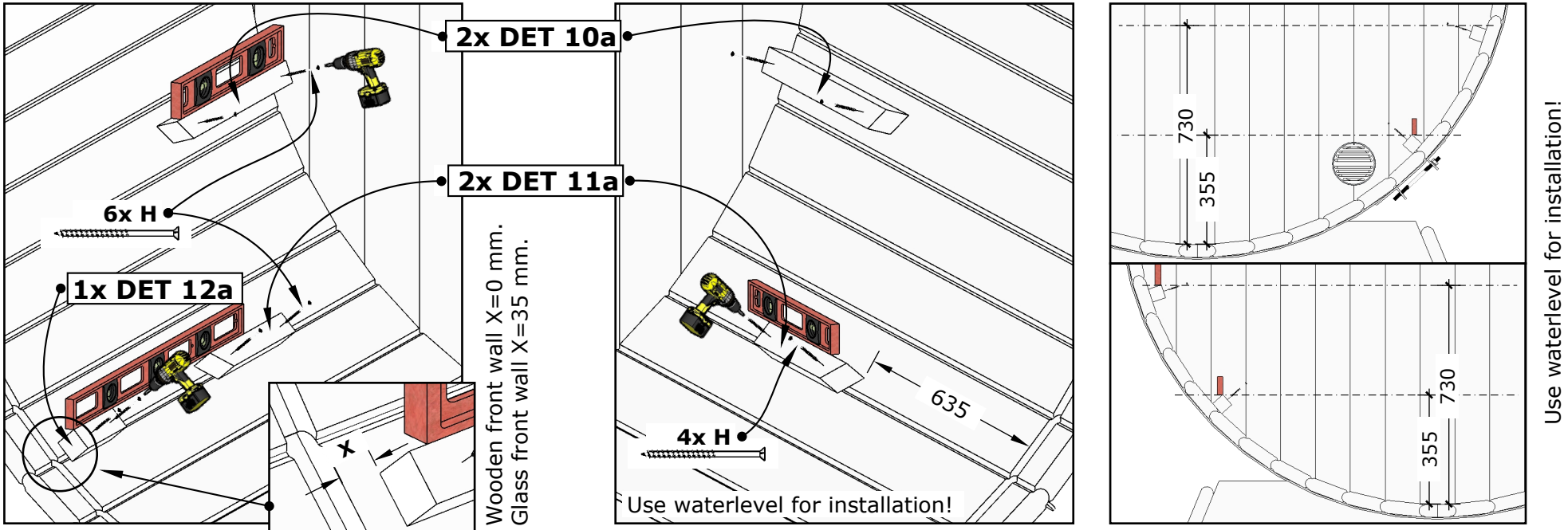

II

Sauna 160, Ø200

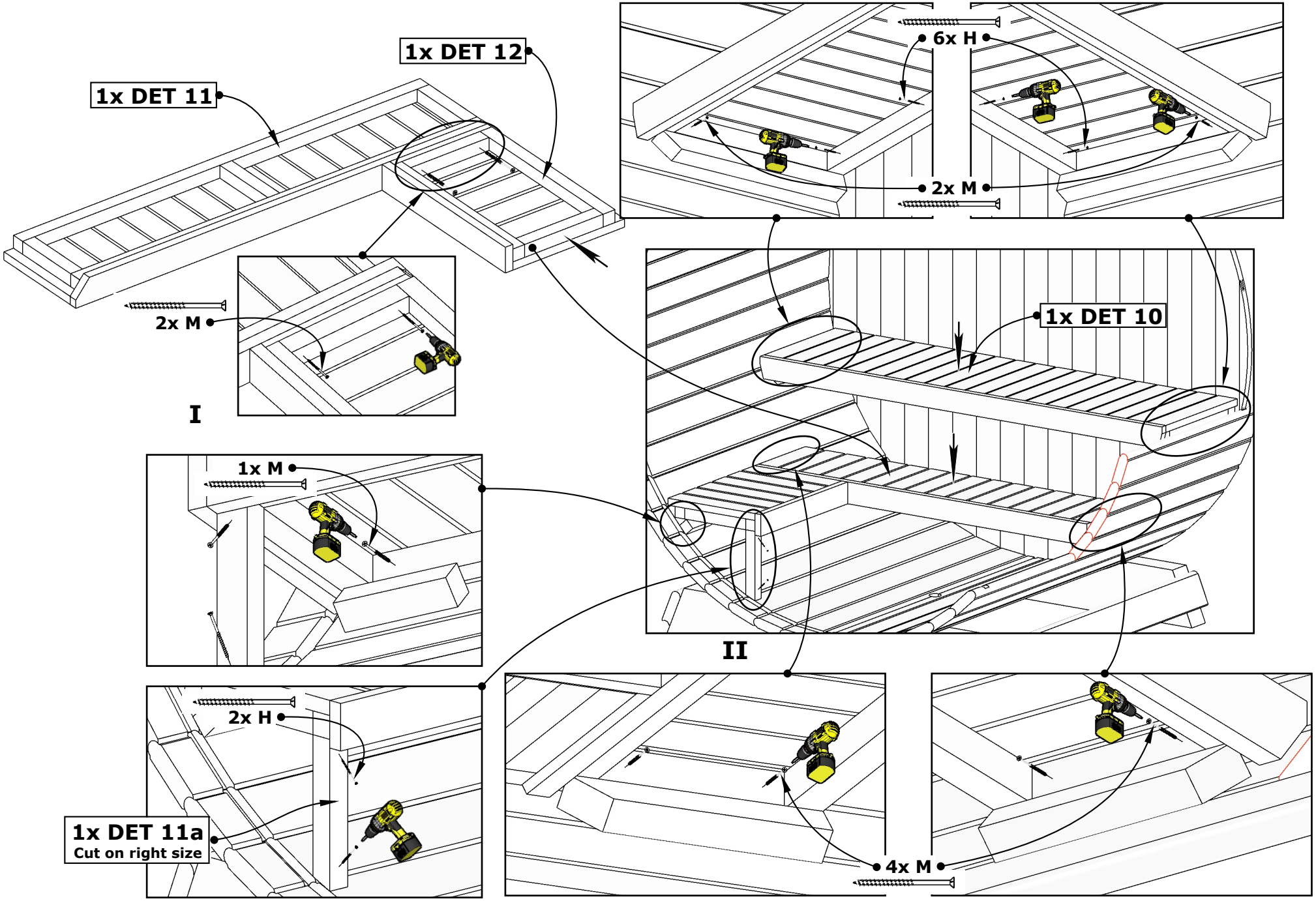

Sauna 160, Ø200

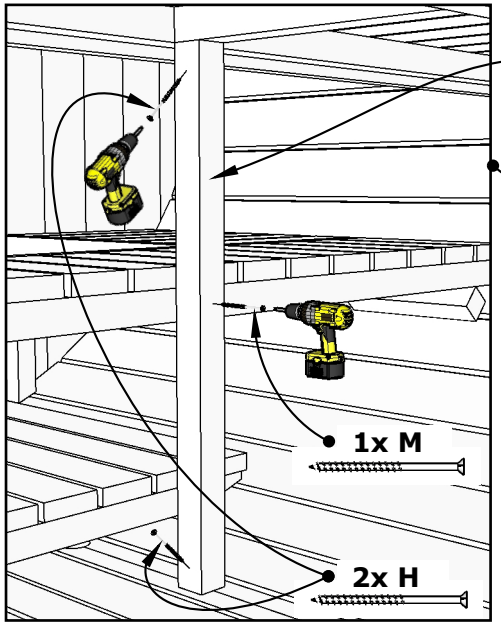

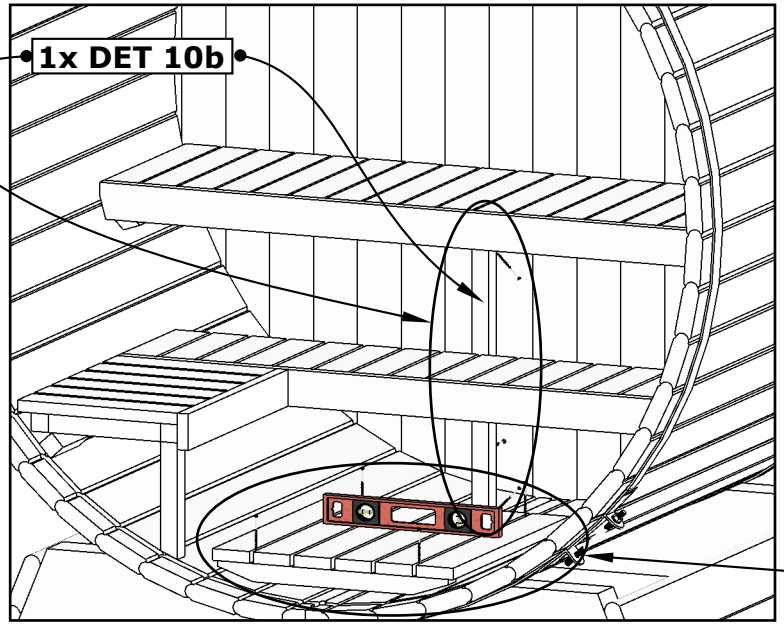

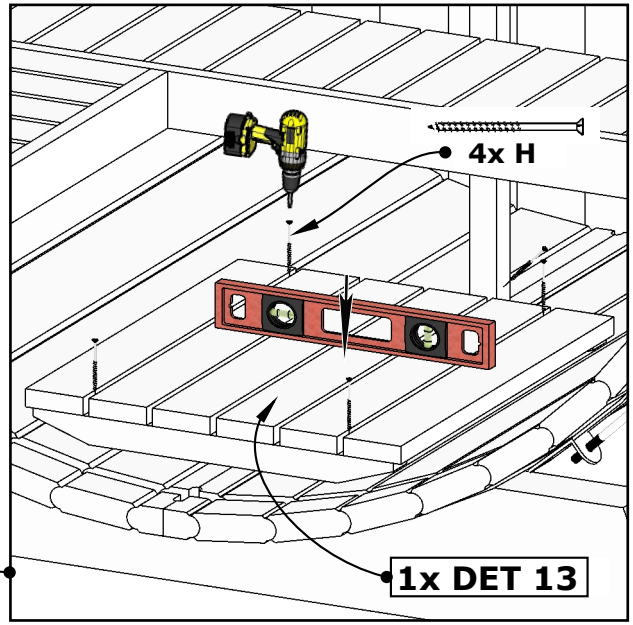

I

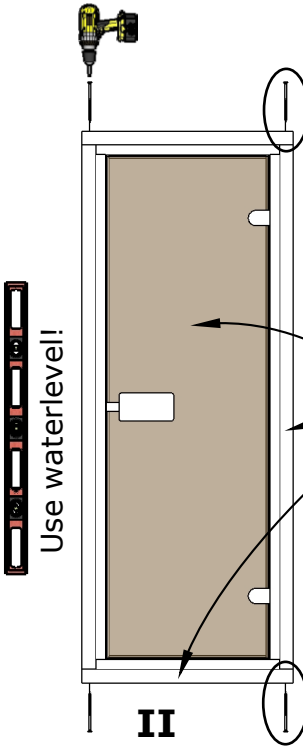

II

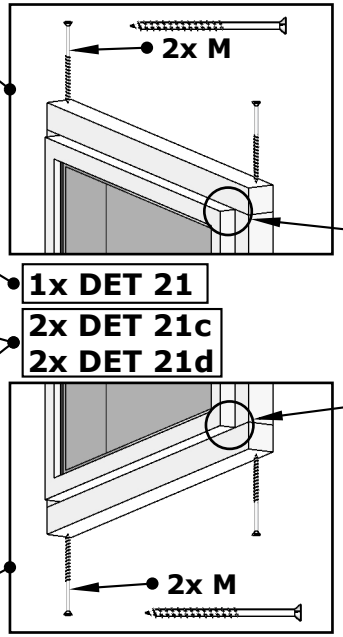

X= Front wall thickness
Wooden front wall 28mm.
Glass front wall 42mm.

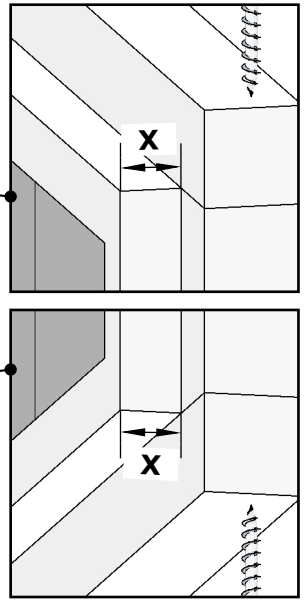

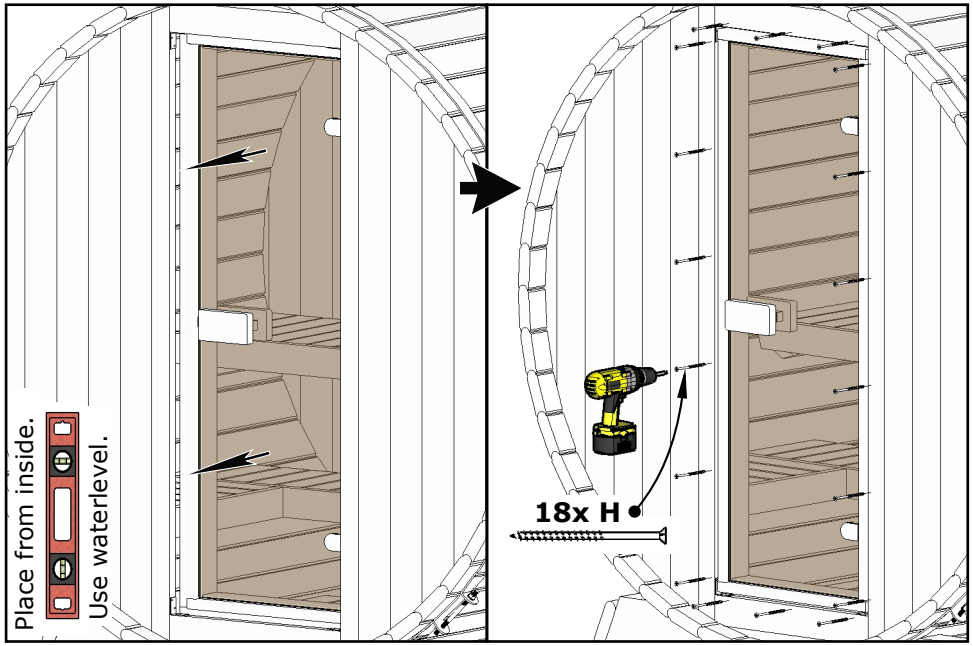

Sauna 160, Ø200

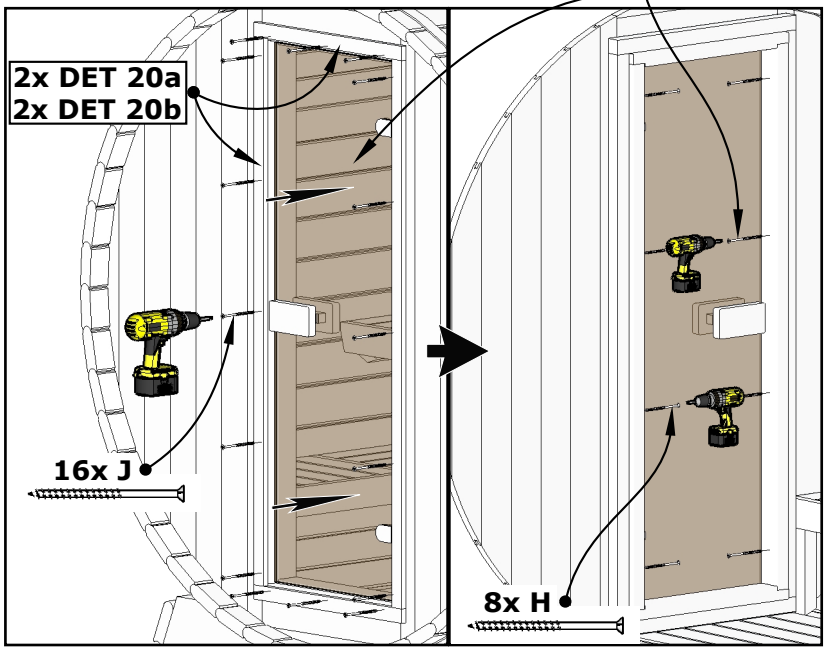

I

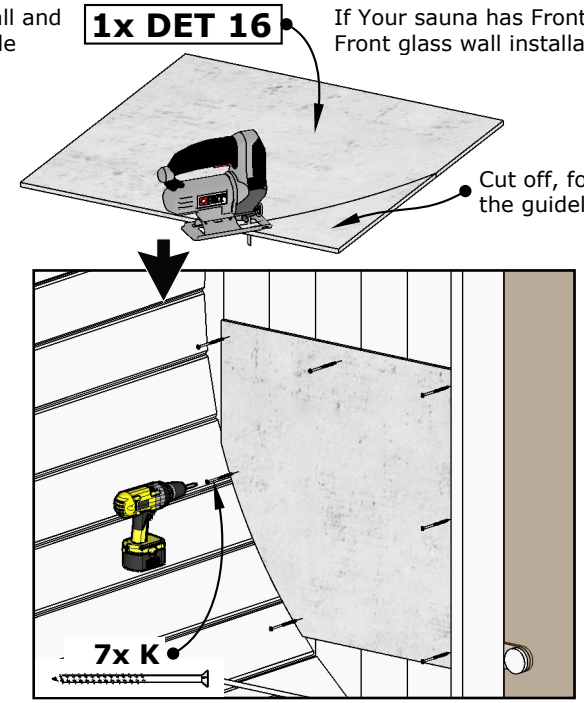

II

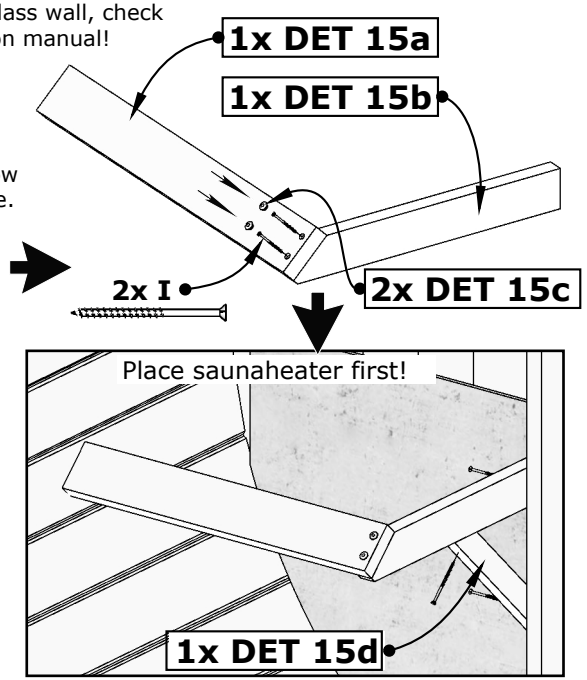

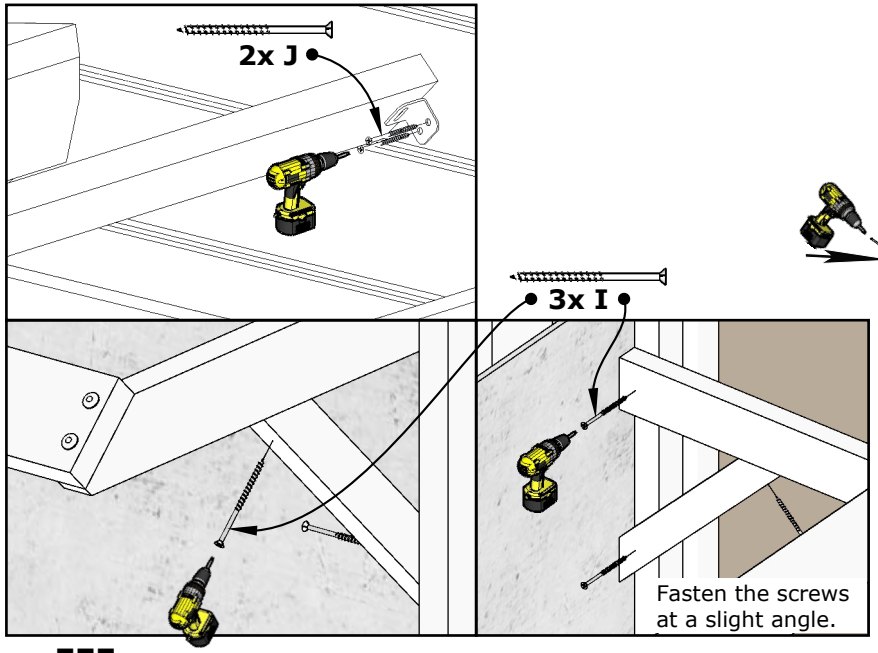

III

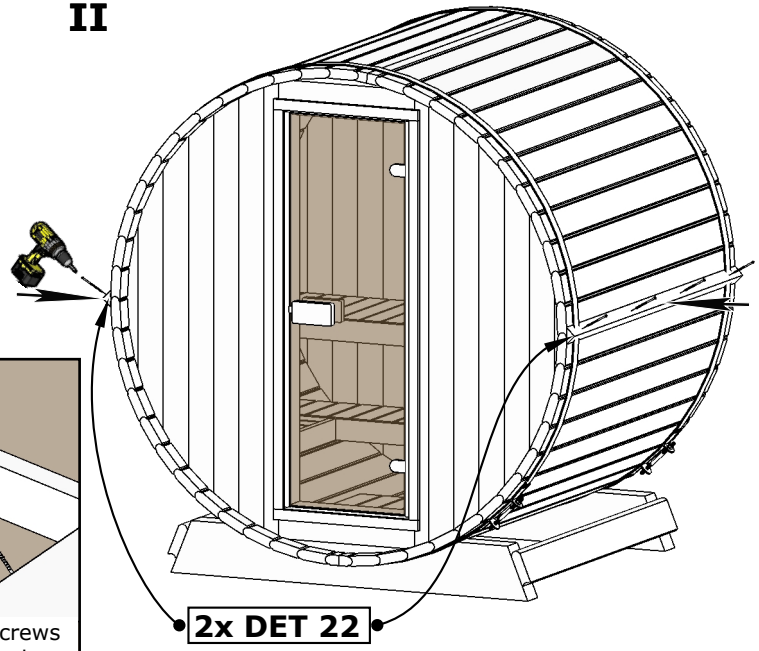

IV

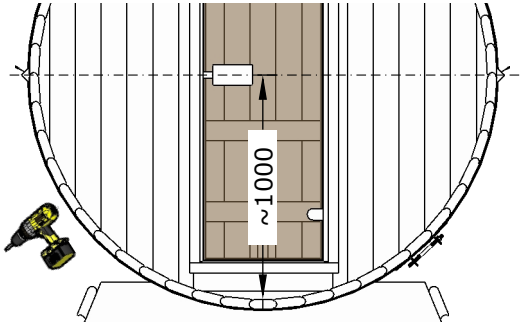

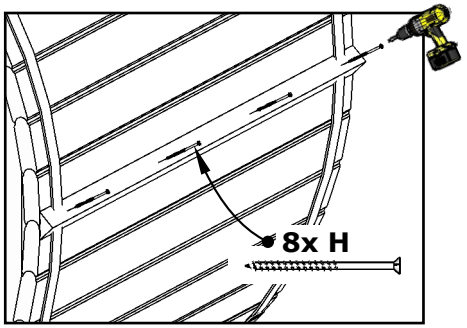

Sauna 160, Ø200

NB! Check also shingles installation manual inside shingles package.

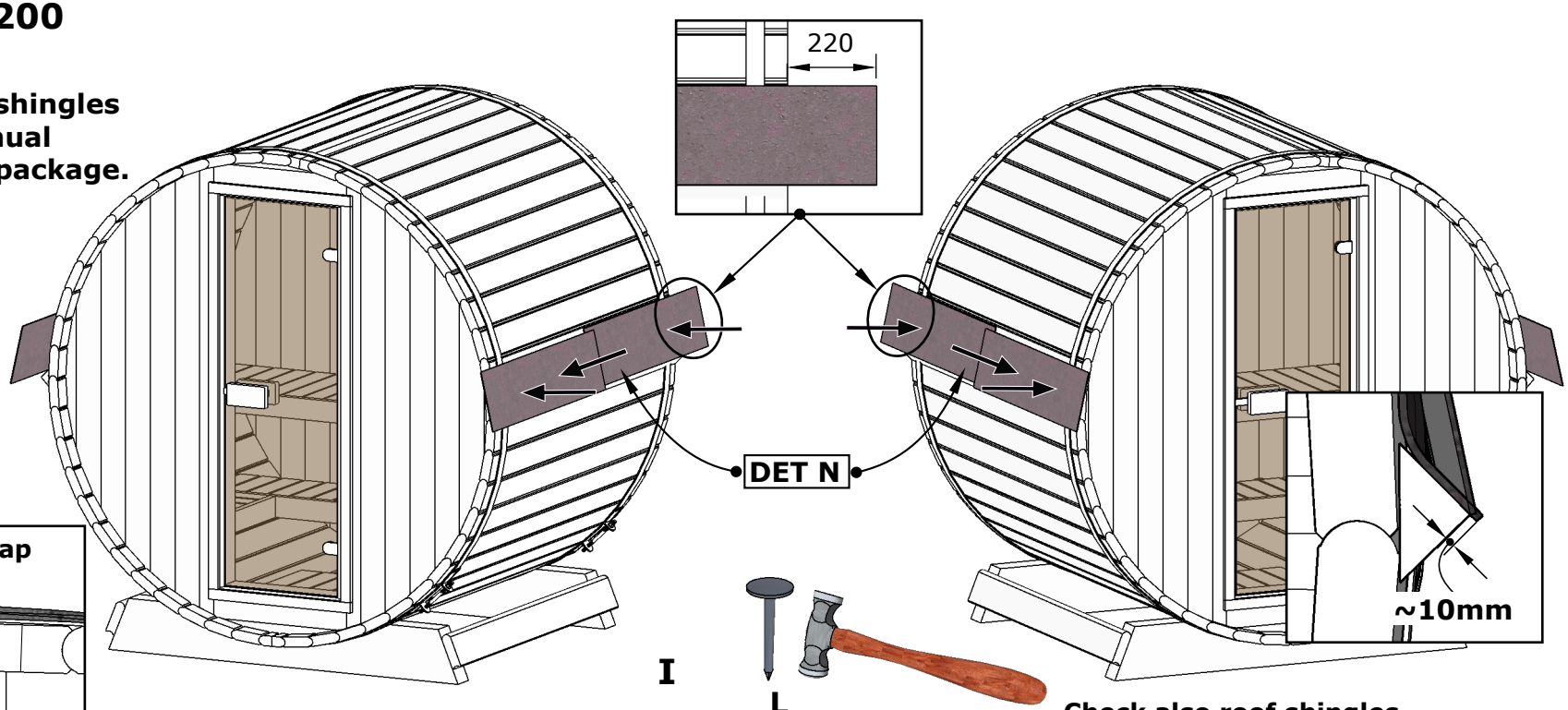

Check also roof shingles installation manual inside package.

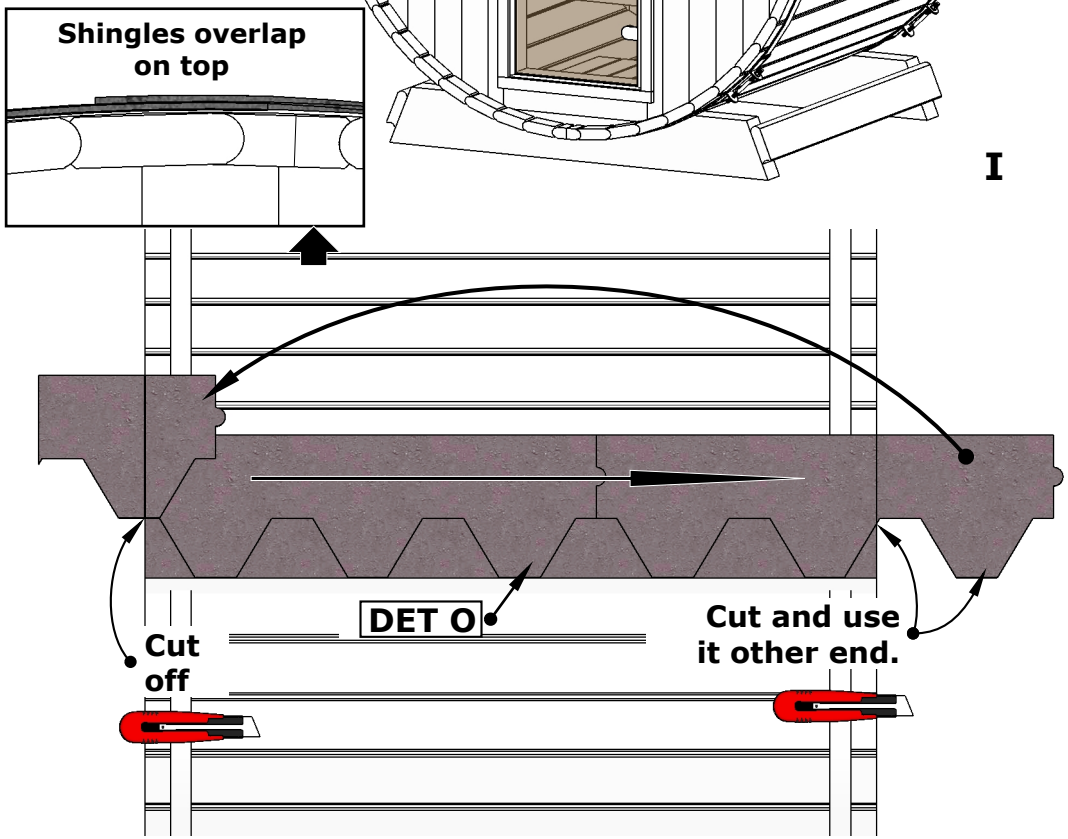

II

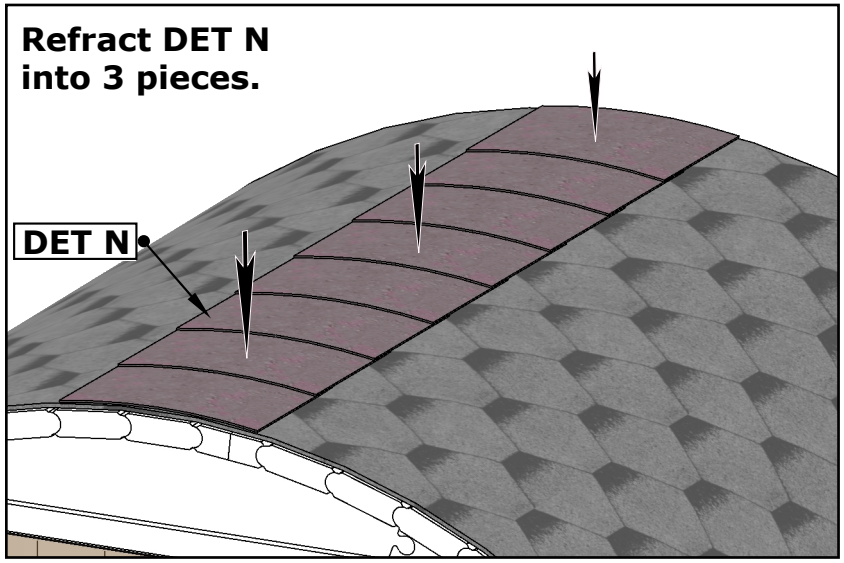

III

Sauna 160, Ø200

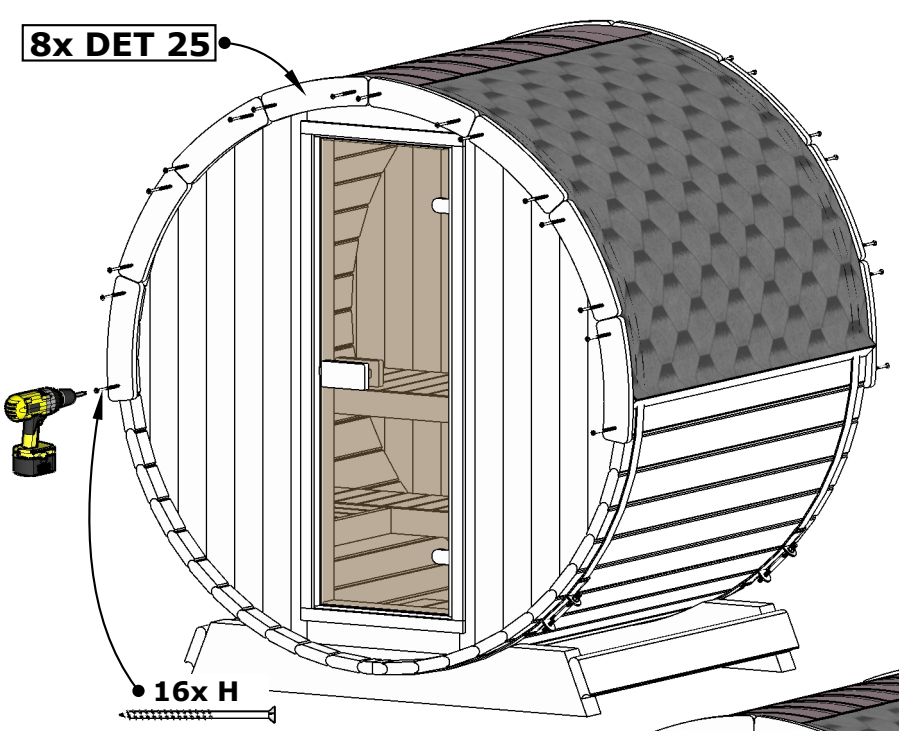

I

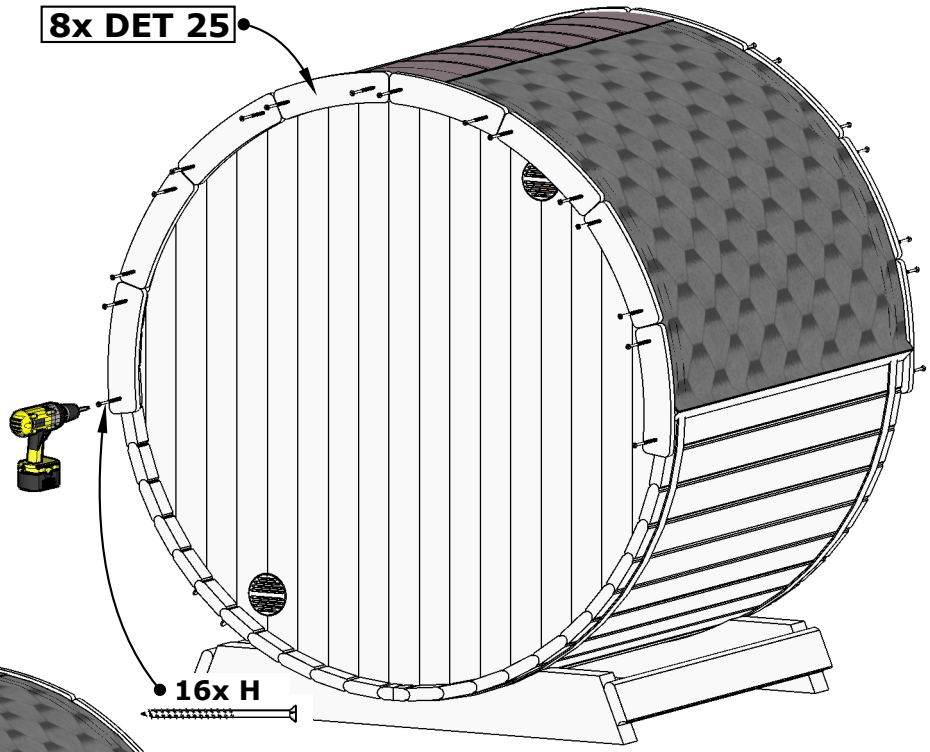

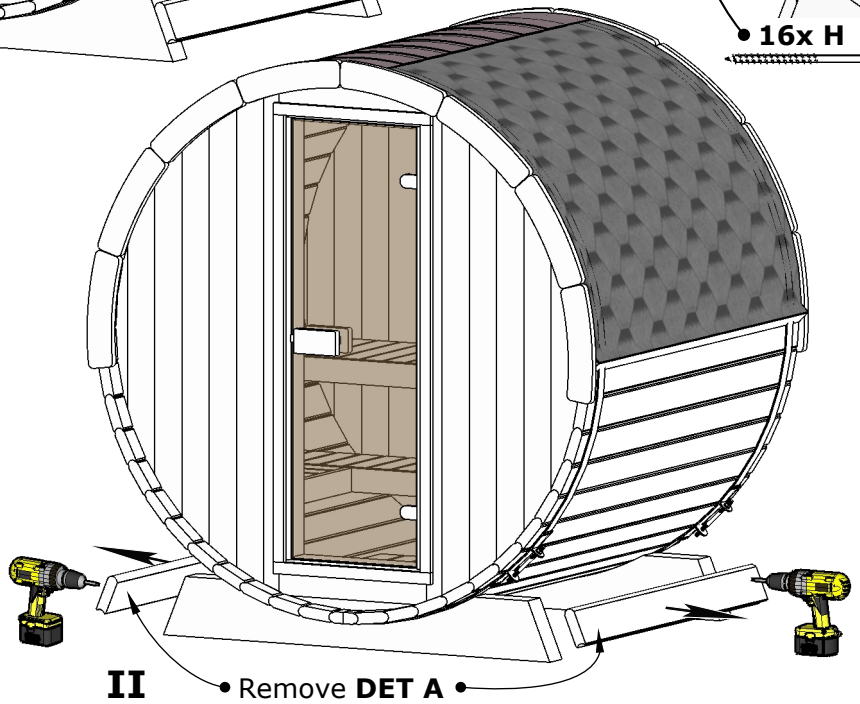

II

I20-TKE-PTS-013