Philips 75BDL6051C
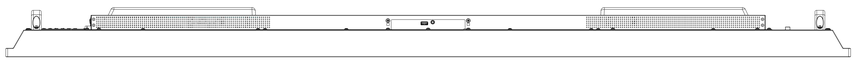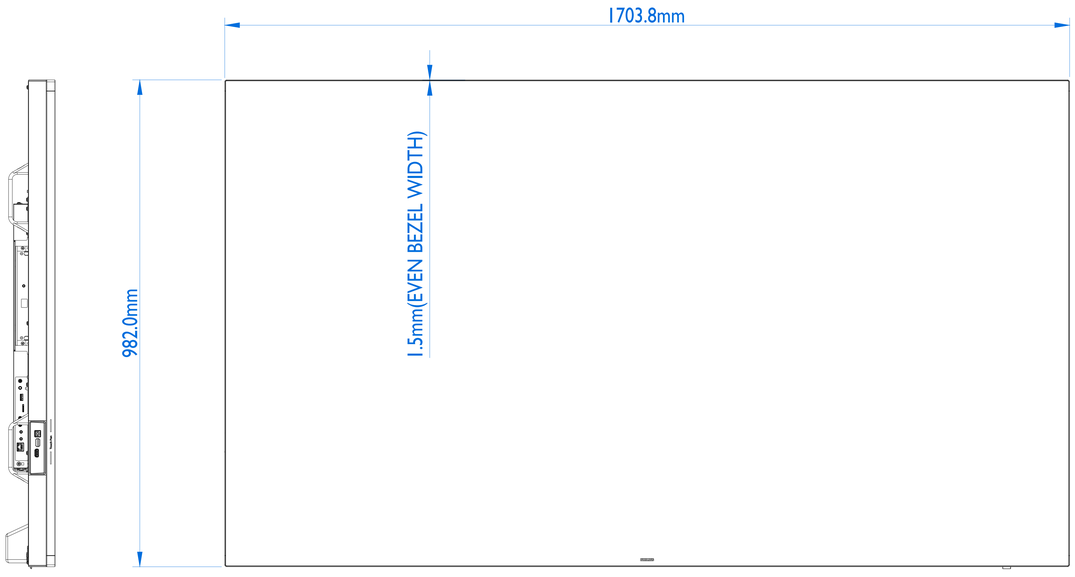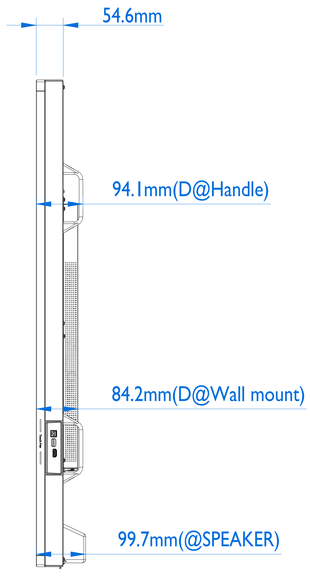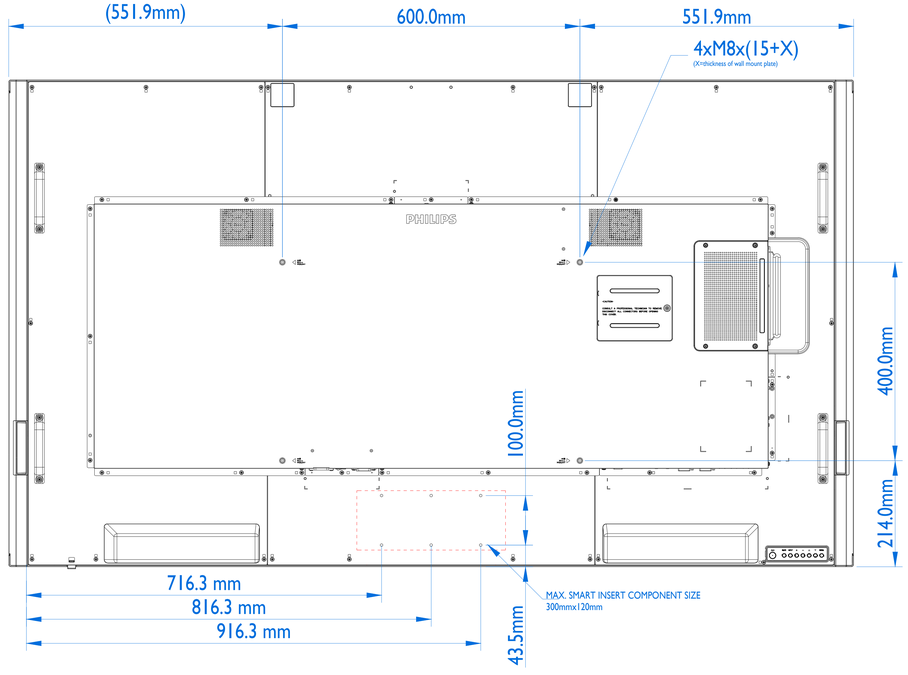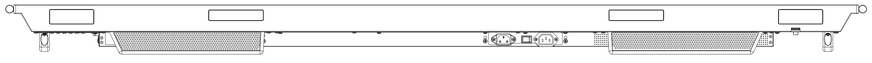
Version: 1.0
Release Date: 2021/03/18