6V_6214U_75_HTV_EU_240x159_MT5596_v0.3_20210712

PART	COLOUR	TECHNIQUE	CHANGES / REMARKS	V
I PHILIPS LOGO	Cool Grey 5C	SILKSCREEN PRINTING	ON HIGH GLOSS SURFACE	00
J STICKER AREA		INMOLDED	ON POLISHED SURFACE	00
K ALL TEXTS, ICON AND CAUTION LABELS		ENGRAVED	ENGRAVED 0.3 (DEPTH 0.3 MM)	00

LABEL DOWN IO TEXT FONTS: CentraleSansCnd Bold 10pt

LABEL SIDE IO TEXT FONTS: CentraleSansCnd Bold 10pt

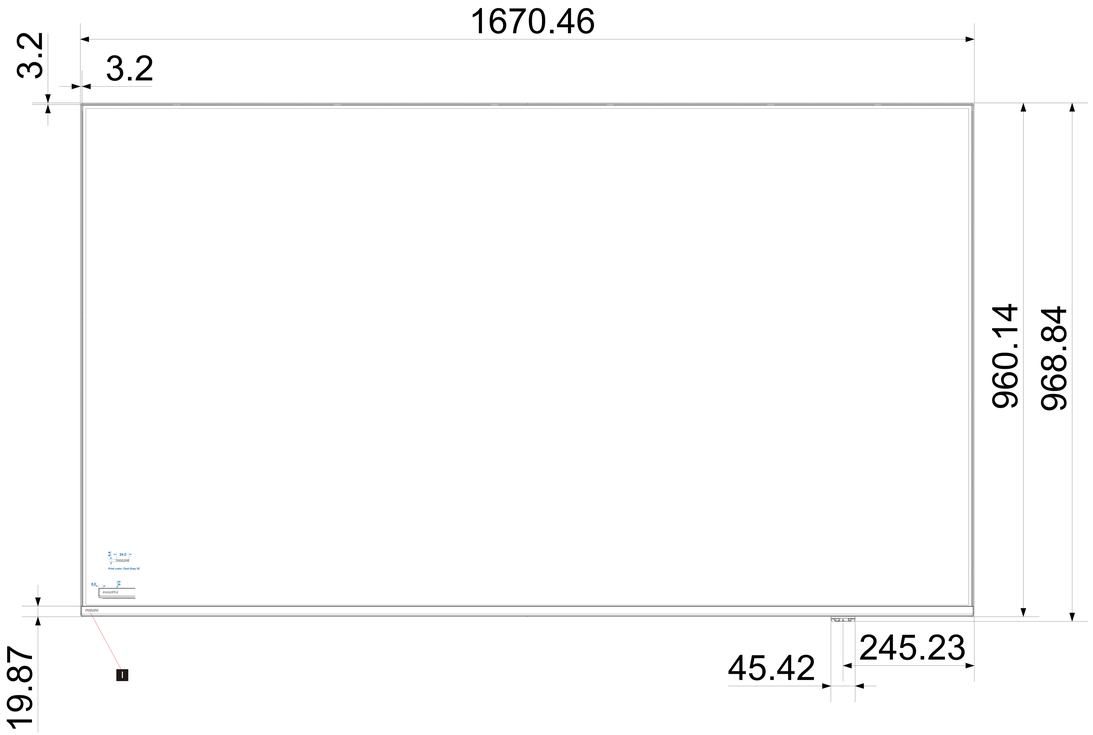

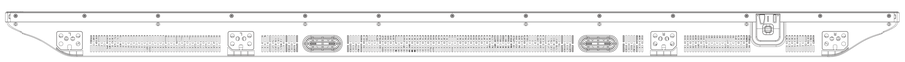

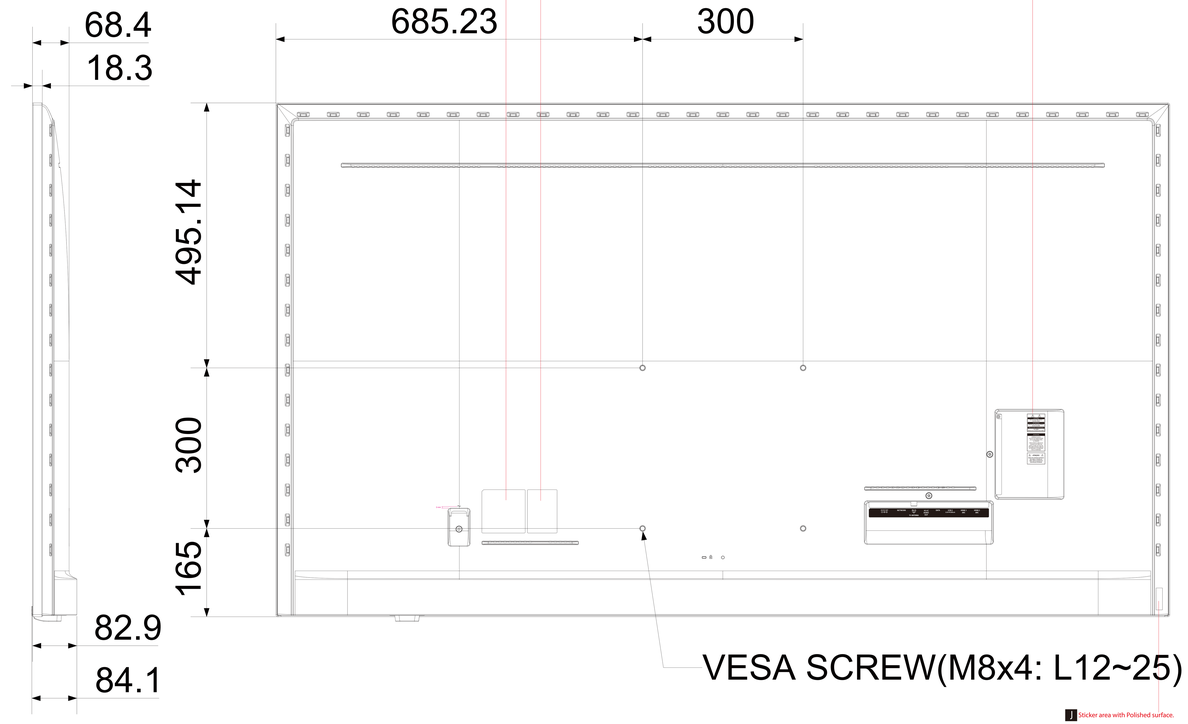

K

NOTE :

FOR AREAS TO BE ENGRAVED ARE IN BLACK WHILST

FOR NON-BLACK AREAS REMAIN IN NORMAL SURFACE.

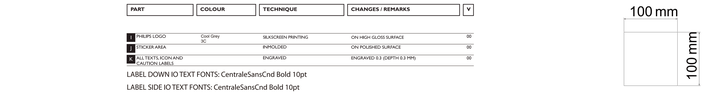

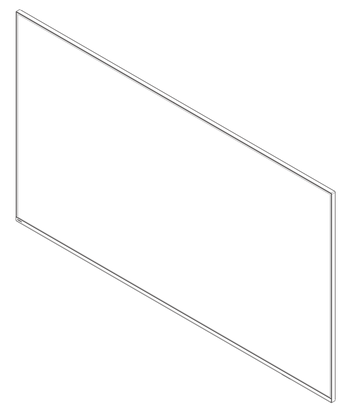

SCALE 0.500

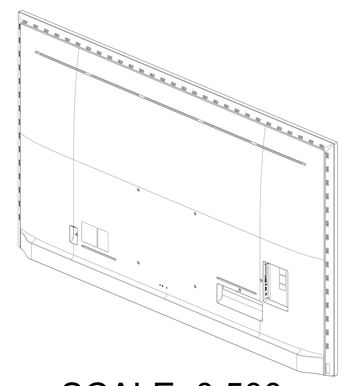

SCALE 0.500