Philips 55BDL5050D
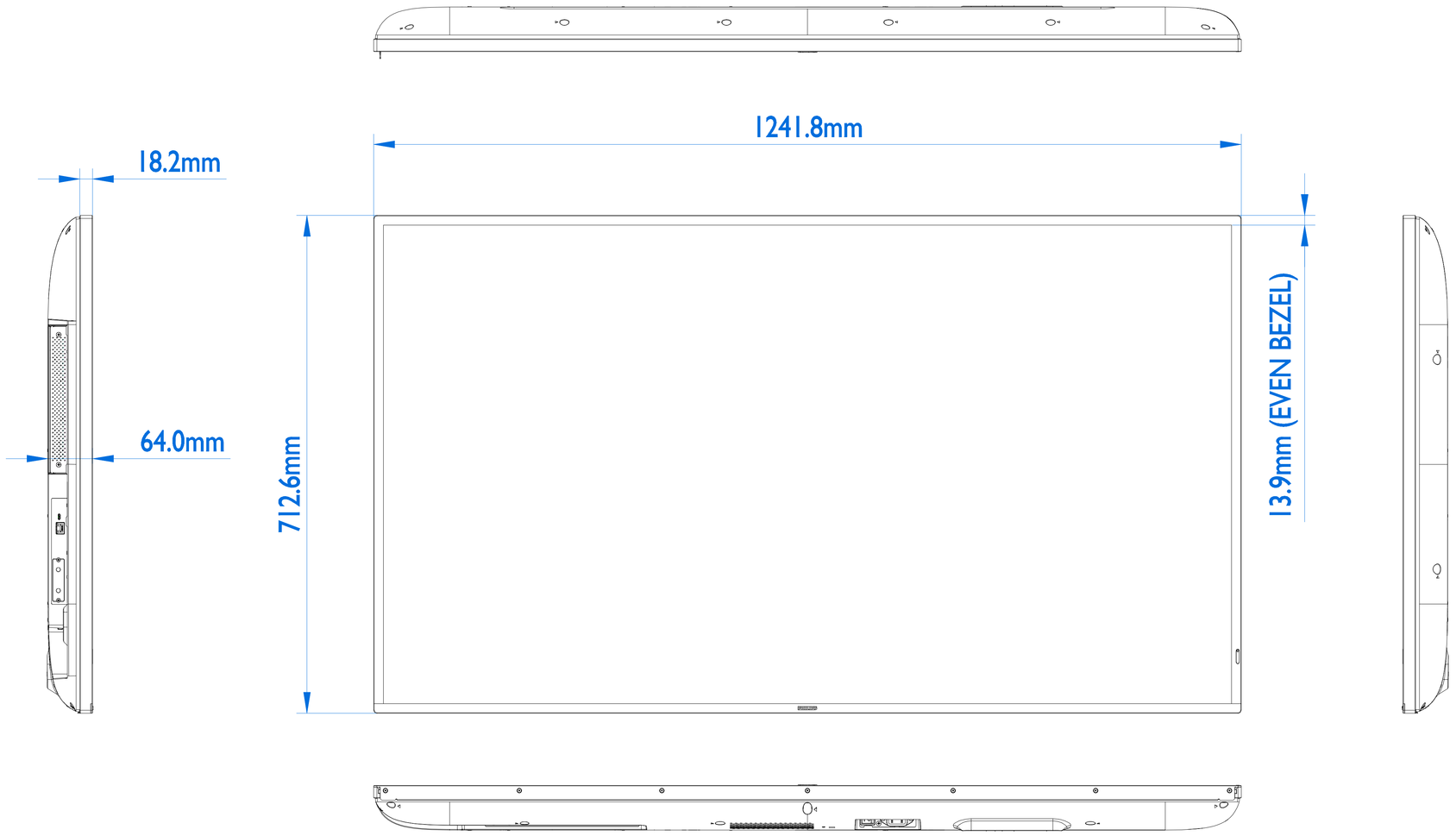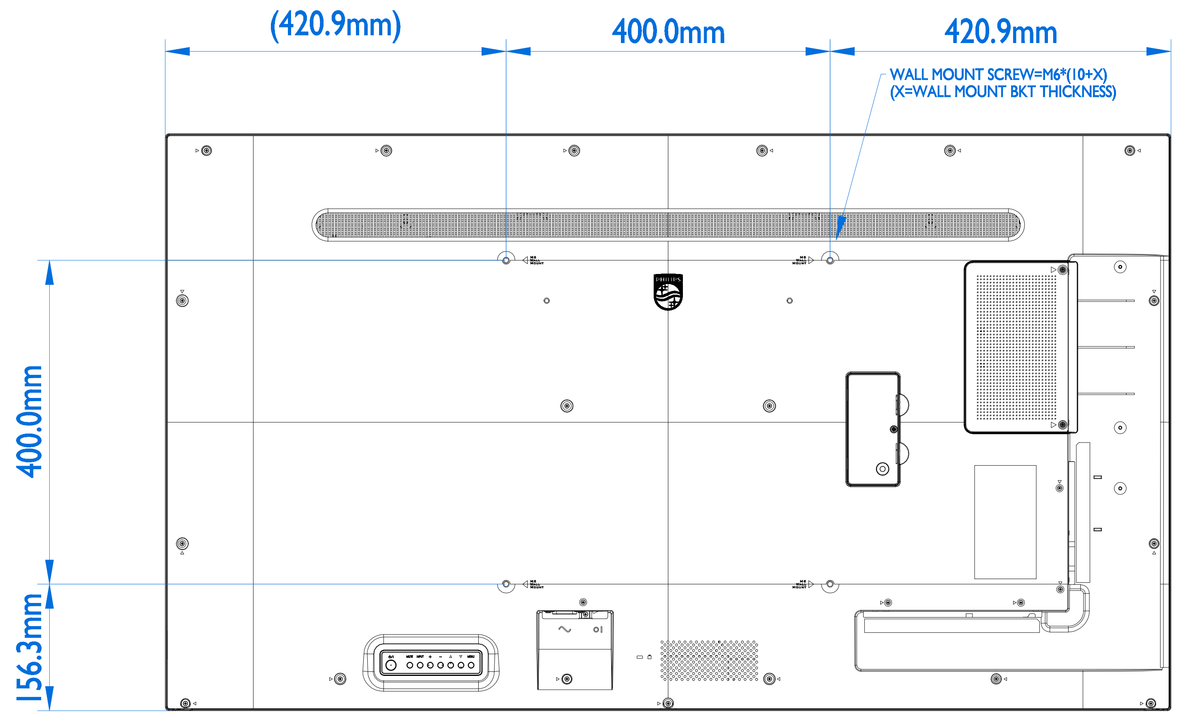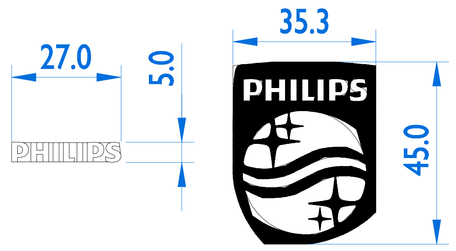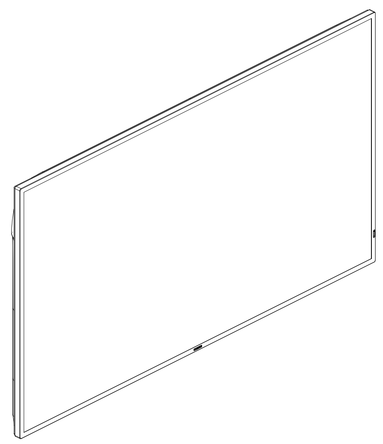
Version: 0.1
Release Date: 2025/04/08