GALLERY CHAIR



schiavello

www.schiavello.com/gallery-chair

schiavello

GALLERY CHAIR



schiavello

CHRIS *CONNELL*

Design veteran Chris Connell has over 30 years' experience in the architecture, interior design and furniture industries.

In the late '80s, he established his own award-winning architecture and interior design studio, Chris Connell Design, around the same time he also co-founded MAP International furniture. Since Schiavello's acquisition of MAP in 2013, Chris has maintained a relationship with the brand, providing guidance and direction based on his design expertise. Chris' reputation illustrates his elegantly shaped residential, retail and hospitality interiors as well as the design and manufacture of objects and furniture.

He strives for simplicity through attention to detail and an honest use of materials. Due to his considered, minimalist and timeless work, his designs have been lauded around the world. He was inducted into the Design Institute of Australia's Hall of Fame last year, while two of his chairs are in permanent collection at the National Gallery of Victoria (NGV), and one is a part of the Museum of Modern Art, New York's permanent collection.

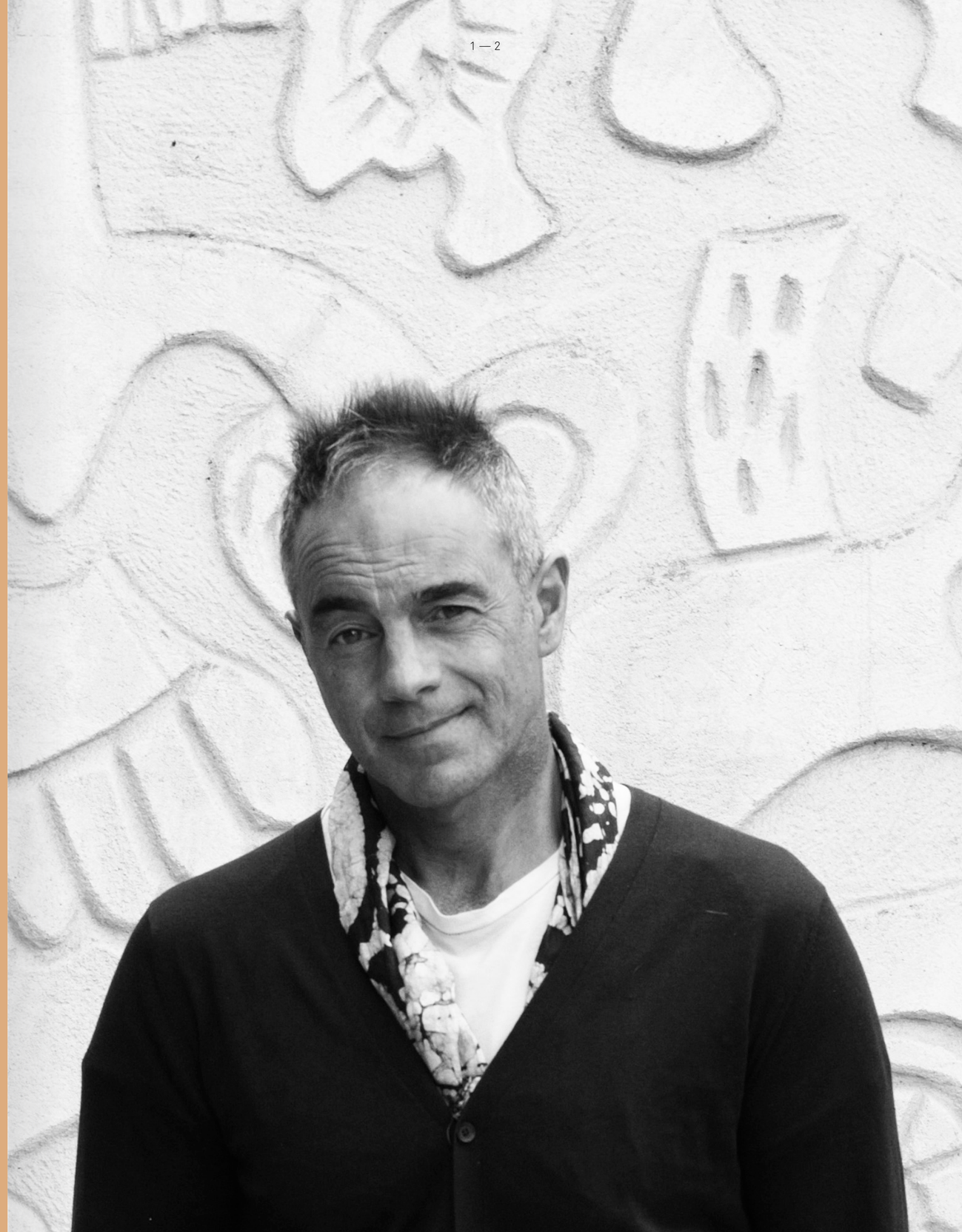



GALLERY *CHAIR*

When the National Gallery of Victoria (NGV) engaged Schiavello to develop a chair that was suitable for multipurpose use throughout the gallery, Schiavello sought the expertise of Melbourne-based furniture designer, Chris Connell. The partnership led to the creation of the Gallery Chair, which came to fruition during the 2018 Triennial.









THE GREAT HALL: A SOURCE OF GREAT *INSPIRATION*

Enthralled by the gallery as a young boy, Chris spent countless hours lying on the floor of the NGV's Great Hall, staring up at the Leonard French stained glass ceiling. For Chris, this beautiful ceiling was his greatest source of inspiration and was key when it came to designing the Gallery Chair.



The chair's vibrant colours, upholstery stitch detail and geometric angles reference the ceiling – aesthetic elements that marry with function to culminate in a gloriously refined chair.

In order to be lightweight as well as functionally comfortable, the chair had to defy conventional engineering methods. A steel frame leaves it strong yet lightweight and able to be stacked eight units high, making it suited not only to the gallery but also any conference or hospitality space.

The Gallery Chair's proportion makes it comfortable and encourages an ergonomic, upright position. Featuring dynamic lumbar support, it automatically responds to the user while cradling the body for maximum comfort. A removable and replaceable upholstered jacket means the chair is comfortable and easy to clean.

Exceptionally light, strong, durable and easy to clean, the Gallery Chair is perfectly suited to use in hospitality, convention, visitor or home environments. It is a truly innovative and adaptable piece that can now be seen residing in the NGV's Great Hall, Tearooms and restaurant.



Upholstery

The Gallery Chair jackets are available in a selection of upholstered fabrics from the Palermo range and black mesh.

FABRIC

PALERMO

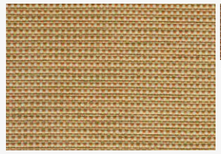

1114 Natural



1107 Honey



1222 Berry



1211 Ruby



516 Sea



511 Shade

MESH

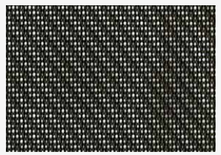

Black

ColourLab

Schiavello's innovative ColourLab brings a considered and cohesive palette of finishes to working and living spaces. Curated by Giulio Ridolfo and developed by Schiavello, the new palette beautifully balances colour, texture and layering across a variety of materials.

Legs

FINISH

- Satin
- ‡ Texture

METAL POWDER COAT

Ash •

Strata ‡ •

Parchment ‡ •



Obsidian Glass ‡ •



Black ‡ •



Stone Grey •



Silk Grey •



Cement Grey •



Grey Beige •



Oxide Red •



Signal Brown •



Orange Brown •



Pale Green •



Emerald Green •



Fir Green •



Ruby Red •



Traffic Red •



Blush •



Colza Yellow •

Sulfur Yellow •



Steel Blue •



Gentian Blue •

Specifications

Gallery Chair with upholstery

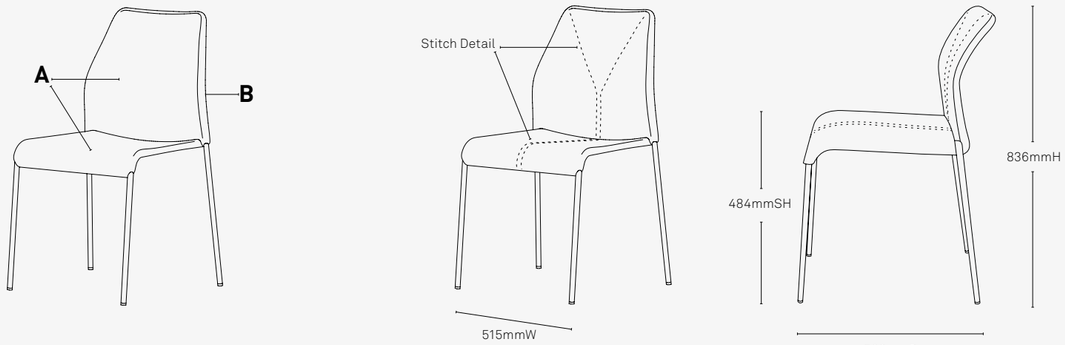

Jackets
Available with or without stitch detail.

Upholstery
Dual colour upholstery available on side **A** and **B,** or one colour upholstery available on side **A** and **B** of chair.

Gallery Chair with mesh

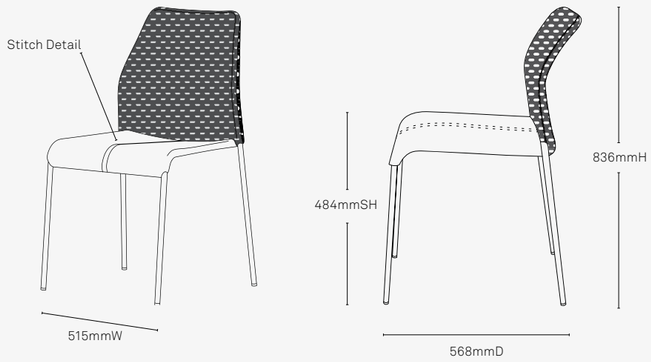

Jackets
Seat Bottom available with or without stitch detail.

Mesh
Black mesh only available on back.

All measurements are in millimeters (mm)





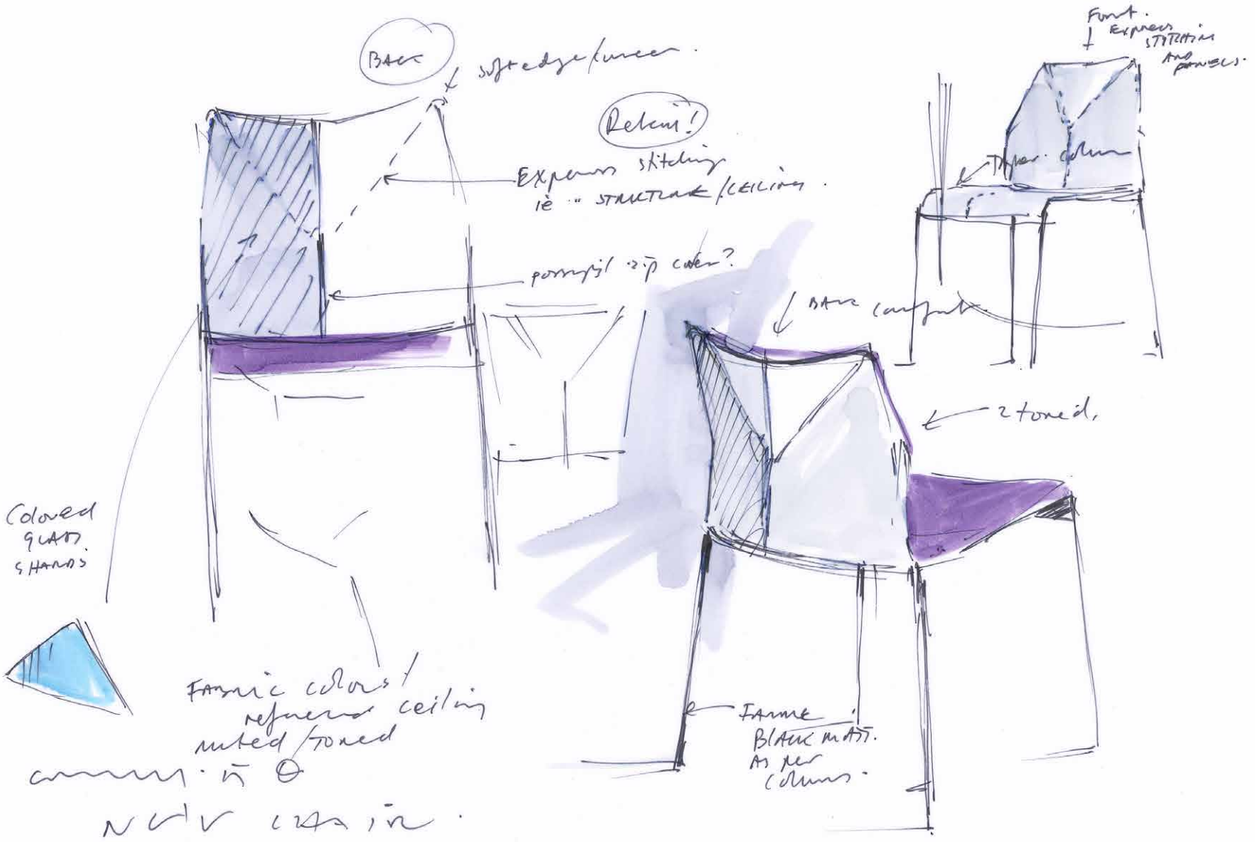

Ecology and sustainability

Schiavello's most important commitment to sustainability is the company-wide Environmental Management System under ISO 14001. The environmental design principles realised means we design for the environment, focusing on efficient energy use and minimum emissions, longevity and durability, re-use and recycling of our products.

Our principles of ME WE (Materials, Energy, Waste Emissions) give us a simple way to think how our operations impact the environment.

Printed on an Australian made paper stock that is PEFC Certified and made from elemental chlorine free bleached pulp sourced from sustainably managed forests and non-controversial sources. It is manufactured by an ISO 14001 certified mill using renewable energy sources.

bsi. ISO 9001 Quality Management FS 604920 ISO 14001 Environmental Management EMS 604919

About Schiavello

Schiavello is a multi-disciplinary company dedicated to developing intelligent, inspiring, ecological and resilient solutions for the office, the home and public spaces.

Schiavello's concepts and products are developed in Australia by applying a design process that brings together the company's core design principles and engineering with the creativity of local and international designers.

The Schiavello Head Office and manufacturing facilities are integral elements of the Schiavello Philosophy. They provide the opportunity to develop a rich tapestry of knowledge that ultimately informs the right solutions and tools for an organisation and its people.

To find a Schiavello Showroom or partner in your area, please visit **schiavello.com/location**

All intellectual property rights and copyrights are reserved. Nothing contained in this brochure may be reproduced without written permission. Schiavello Group Pty Ltd reserves the right to change any or all details without prior notice. All dimensions stated within this document are nominal and/or approximate only and subject to variation.

SCH/C56-C