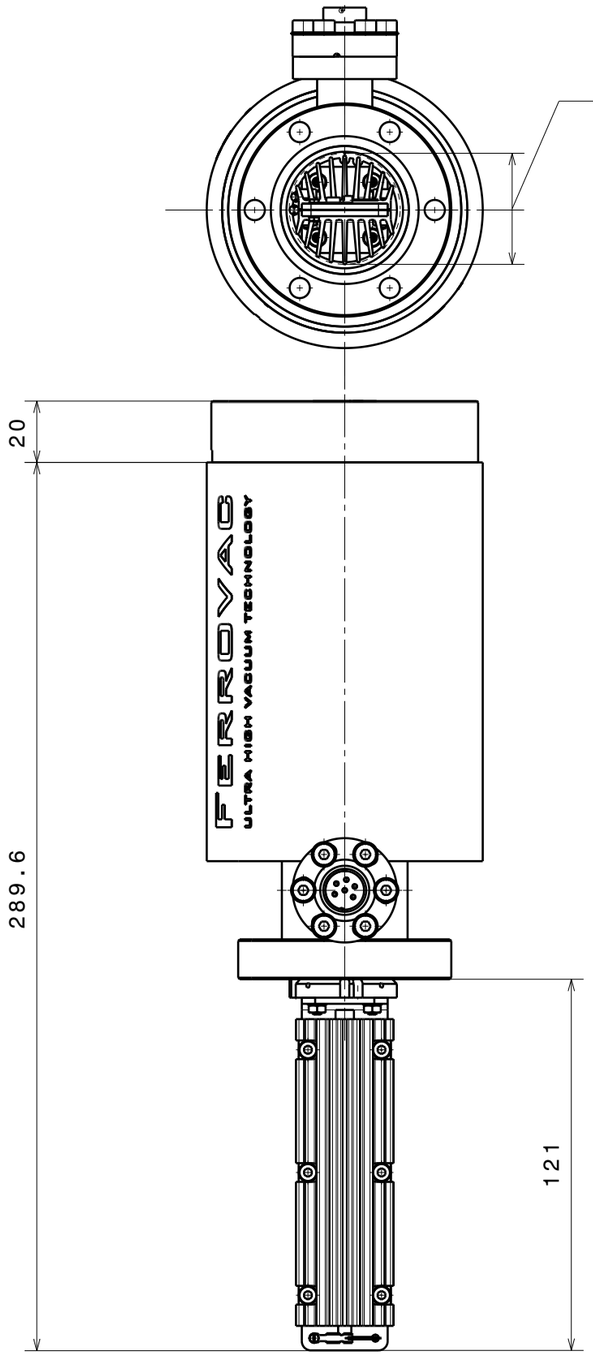

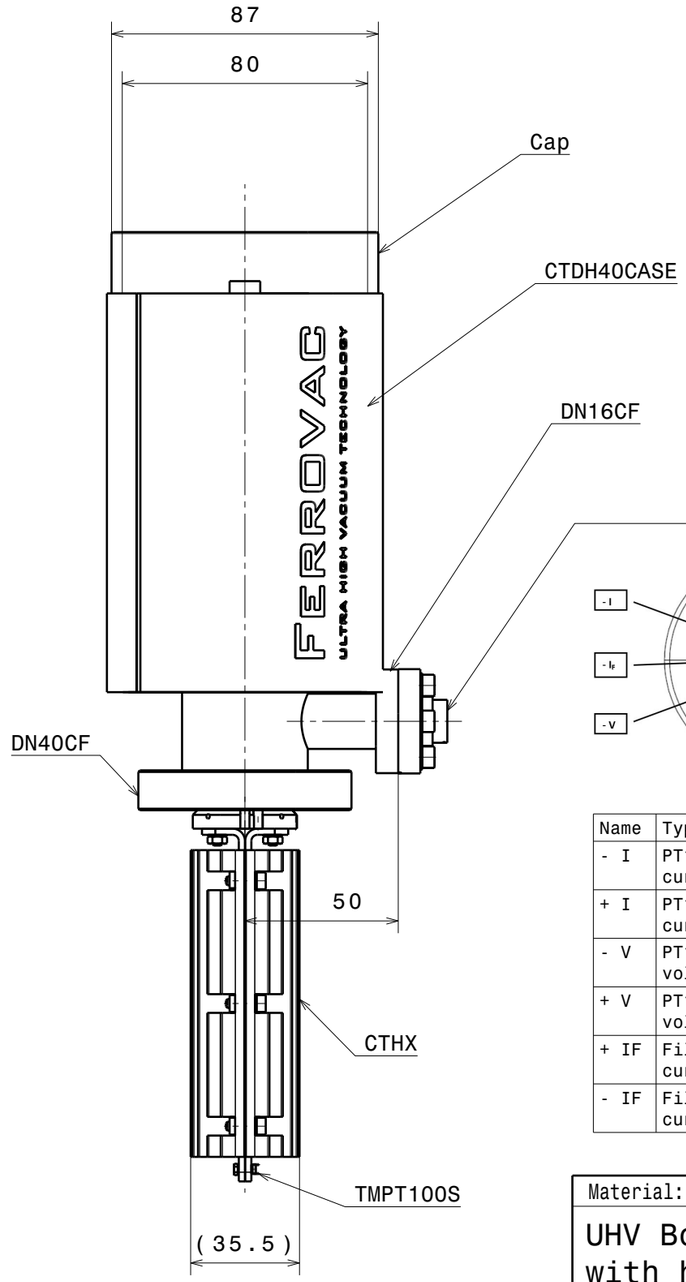

6-Pin Feedthrough
(EFCF220CM06C16)

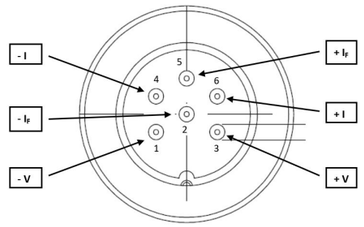

Airside view

Name	Type	Spec	Pin	Note
- I	PT100 curr.	0.1-10 mA	#4	red
+ I	PT100 curr.	0.1-10 mA	#6	yellow
- V	PT100 volt.	0.1-5.0 V	#1	green
+ V	PT100 volt.	0.1-5.0 V	#3	blue
+ IF	Fil. curr.	Max. 4 A	#2	
- IF	Fil. curr.	Max. 4 A	#5	

(1:5)

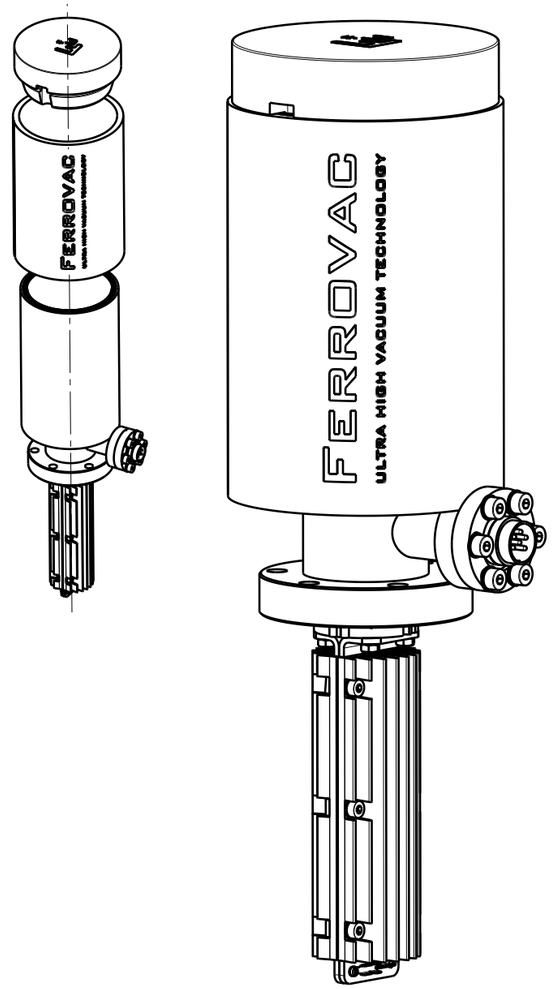

Ra 0.8 (✓)

+0.2 / +0.1 -0.1 / -0.2

general tolerances ISO 2768-K

Material:

UHV Booster CF40 dewar version
with heating coil and temp. sensor

CTDH40

nominal dimension	over	1	6	30	100	300	1000
	up to	6	30	100	300	1000	2000
tolerance ±		0.05	0.1	0.3	0.5	0.8	1.2

Scale	Drawn	P.Ganz
1:2 (1:5)	Date	08.01.2017
	Changed	17.09.2024 JB
Rev. C	CTDH40	A3 sheet 1/1

Ferrovac GmbH
CH-8050 Zurich

THE INFORMATION CONTAINED IN THIS DRAWING IS THE SOLE PROPERTY OF FERROVAC GMBH. ANY REPRODUCTION IN PART OR AS WHOLE WITHOUT OUR PERMISSION IS PROHIBITED.