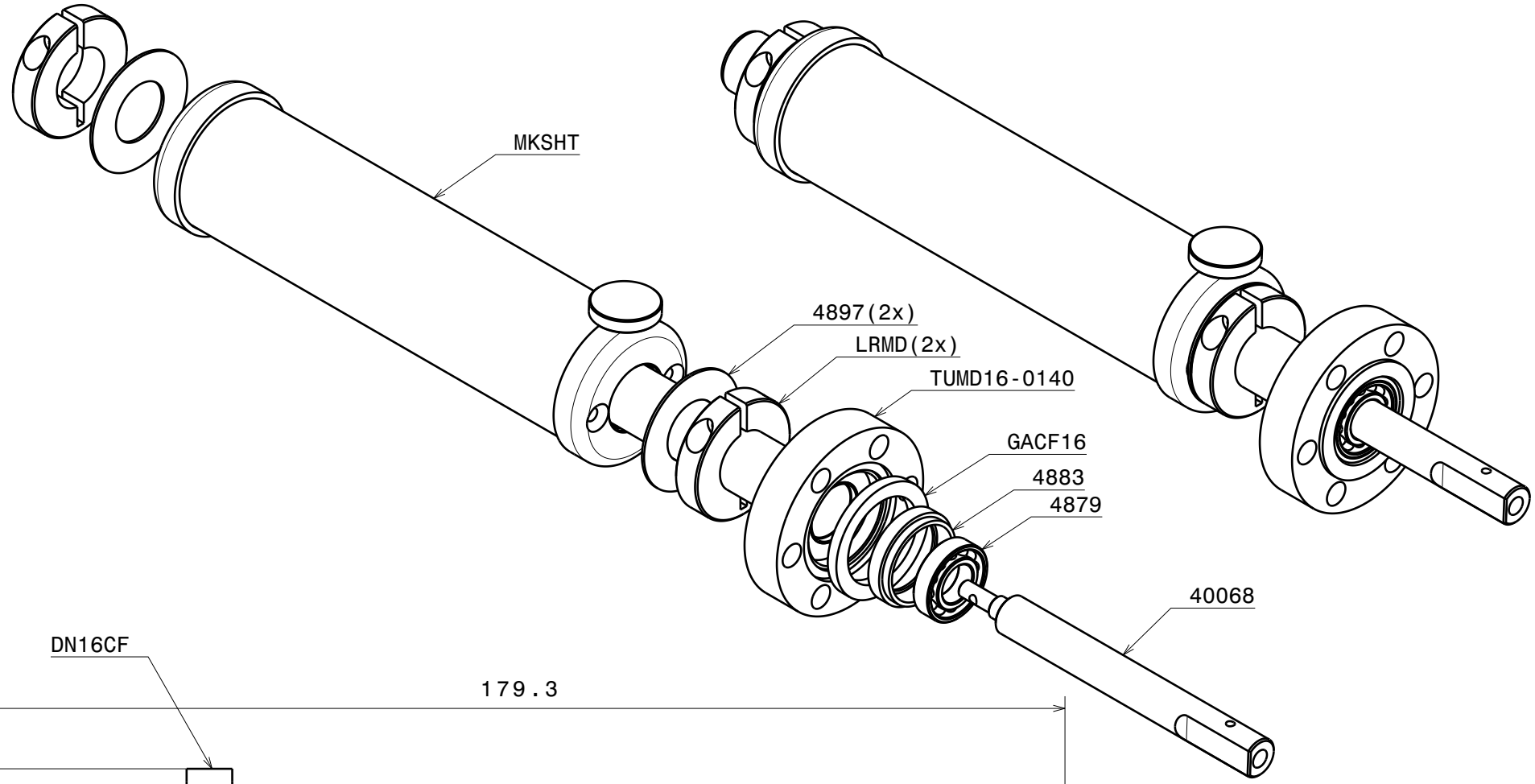

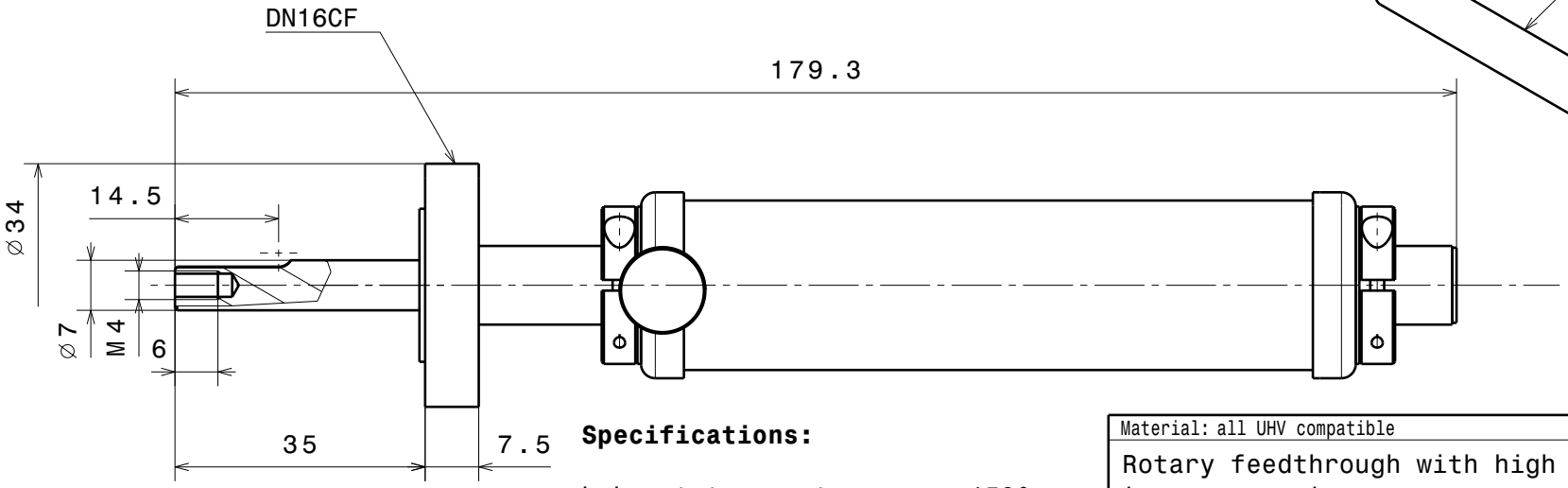

Specifications:

bakeout temperature max. 150°
He leak rate < 1.0 x 10^-10 mbar
continuous rotation
torque 1.0 Nm

Material: all UHV compatible

Rotary feedthrough with high torque magnet

RD

nominal dimension	over	1	6	30	100	300	1000
	up to	6	30	100	300	1000	2000
tolerance ±		0.05	0.1	0.3	0.5	0.8	1.2

Scale	1:1 (2:1)
Drawn	Denys Sutter
Date	19.06.2013
changed	14.03.2017SM
Rev.	B

Ferrovac GmbH
CH-8050 Zurich

THE INFORMATION CONTAINED IN THIS DRAWING IS THE SOLE PROPERTY OF FERROVAC GMBH. ANY REPRODUCTION IN PART OR AS WHOLE WITHOUT OUR PERMISSION IS PROHIBITED.

RD16HT
sheet 1/1