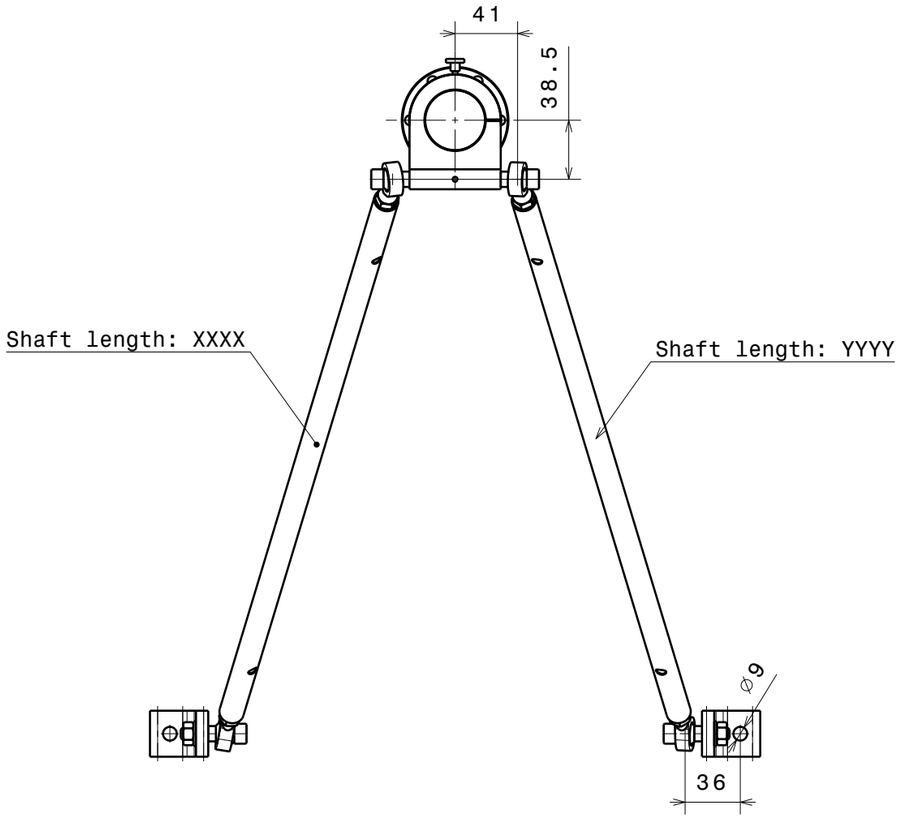

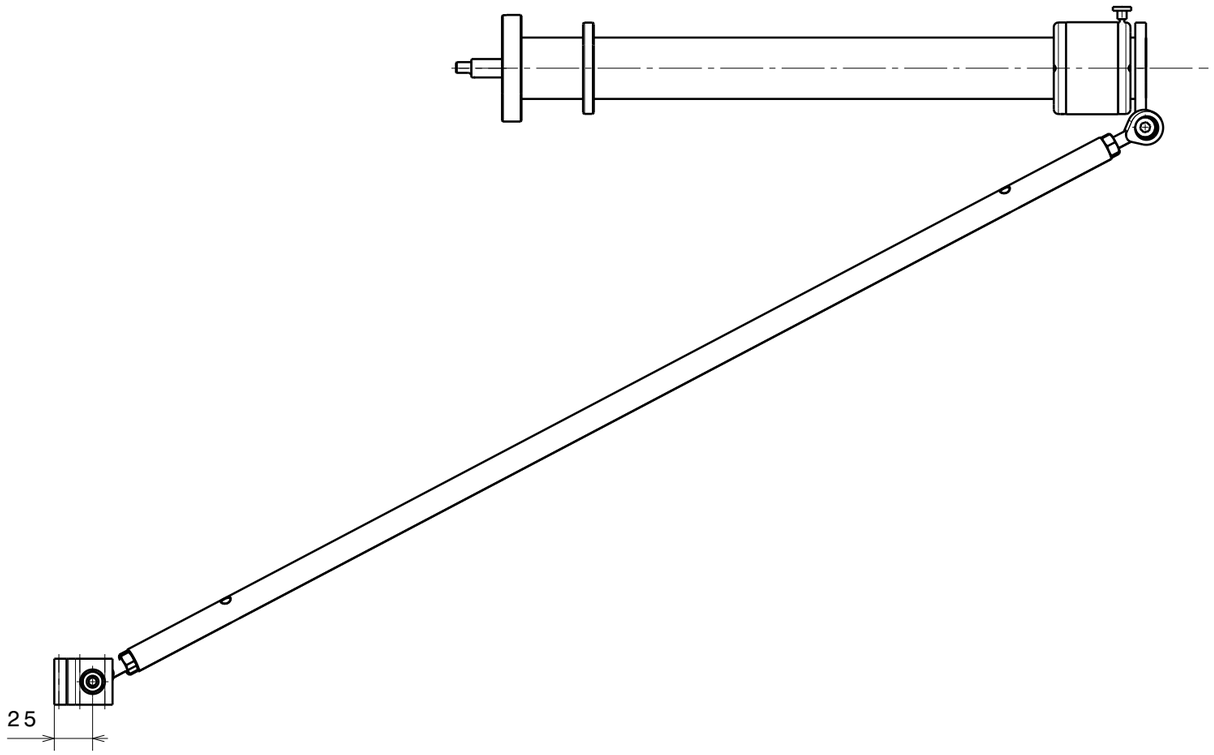

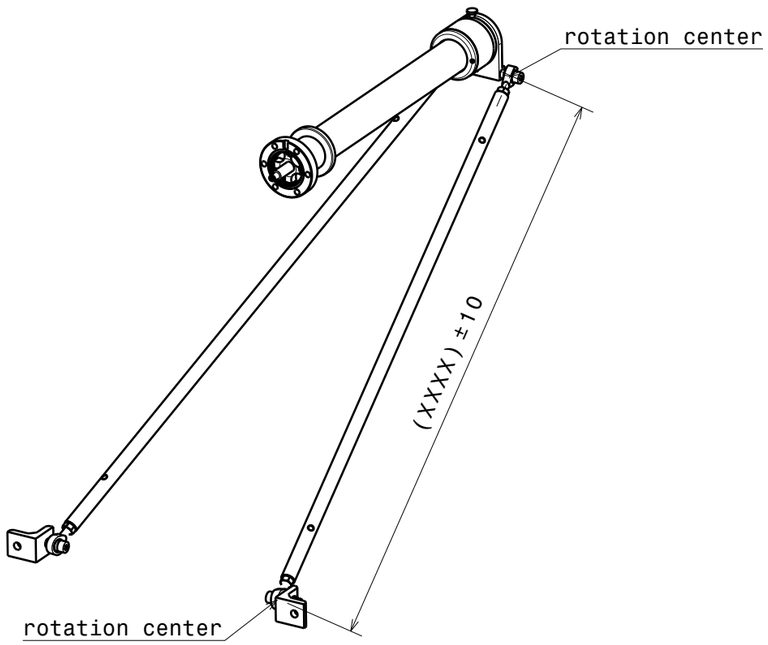

Material: ....

Tube support with pivot mounted shafts OD 16

TSRMBS-XXXX-YYYY

nominal dimension	over	1	6	30	100	300	1000
	up to	6	30	100	300	1000	2000
tolerance	±	0.05	0.1	0.3	0.5	0.8	1.2

Scale	1:4
Drawn	Brunner
Date	01.04.2015
Changed	04.06.2024 LJ
Rev.	B

TSRMBS-XXXX-YYYY

A3 sheet 1/1

Ferrovac GmbH

CH-8050 Zurich

THE INFORMATION CONTAINED IN THIS DRAWING IS THE SOLE PROPERTY OF FERROVAC GMBH. ANY REPRODUCTION IN PART OR AS WHOLE WITHOUT OUR PERMISSION IS PROHIBITED.