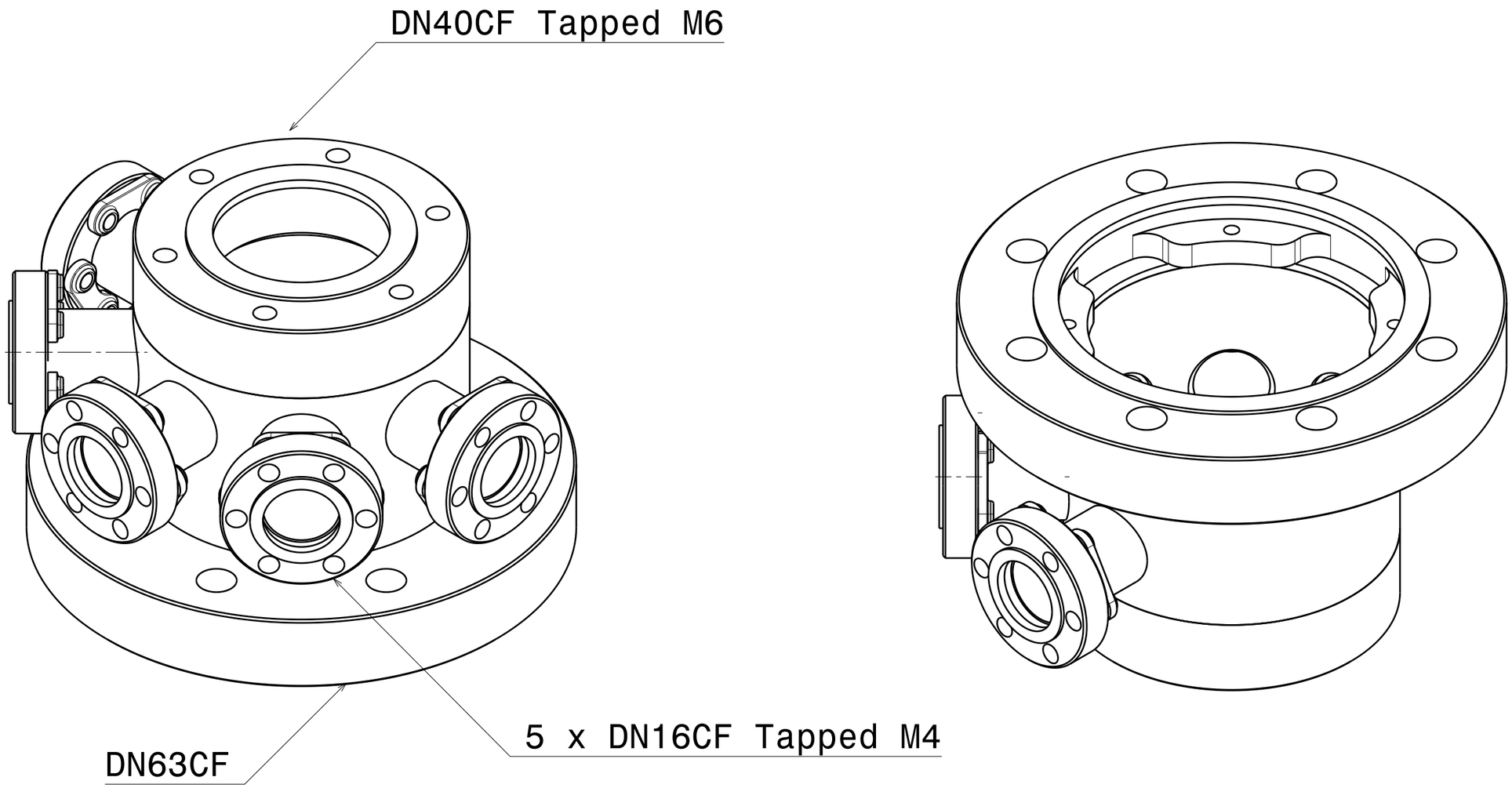

Ra 0.8 (√) +0.2 +0.1 -0.1 -0.2

general tolerances ISO 2768-K

Material: 1.4301

Reducing Feedthrough Chamber

nominal dimension	over	1	6	30	100	300	1000
	up to	6	30	100	300	1000	2000
tolerance ±		0.05	0.1	0.3	0.5	0.8	1.2

Scale	1:1
Drawn	M.Maier
Date	18.10.2017
Changed	21.07.2025 JB
Rev.	C

MPCF63CF40T5XCF16

A3 sheet 1/2

Ferrovac GmbH
CH-8050 Zurich

THE INFORMATION CONTAINED IN THIS DRAWING IS THE SOLE PROPERTY OF FERROVAC GMBH. ANY REPRODUCTION IN PART OR AS WHOLE WITHOUT OUR PERMISSION IS PROHIBITED.