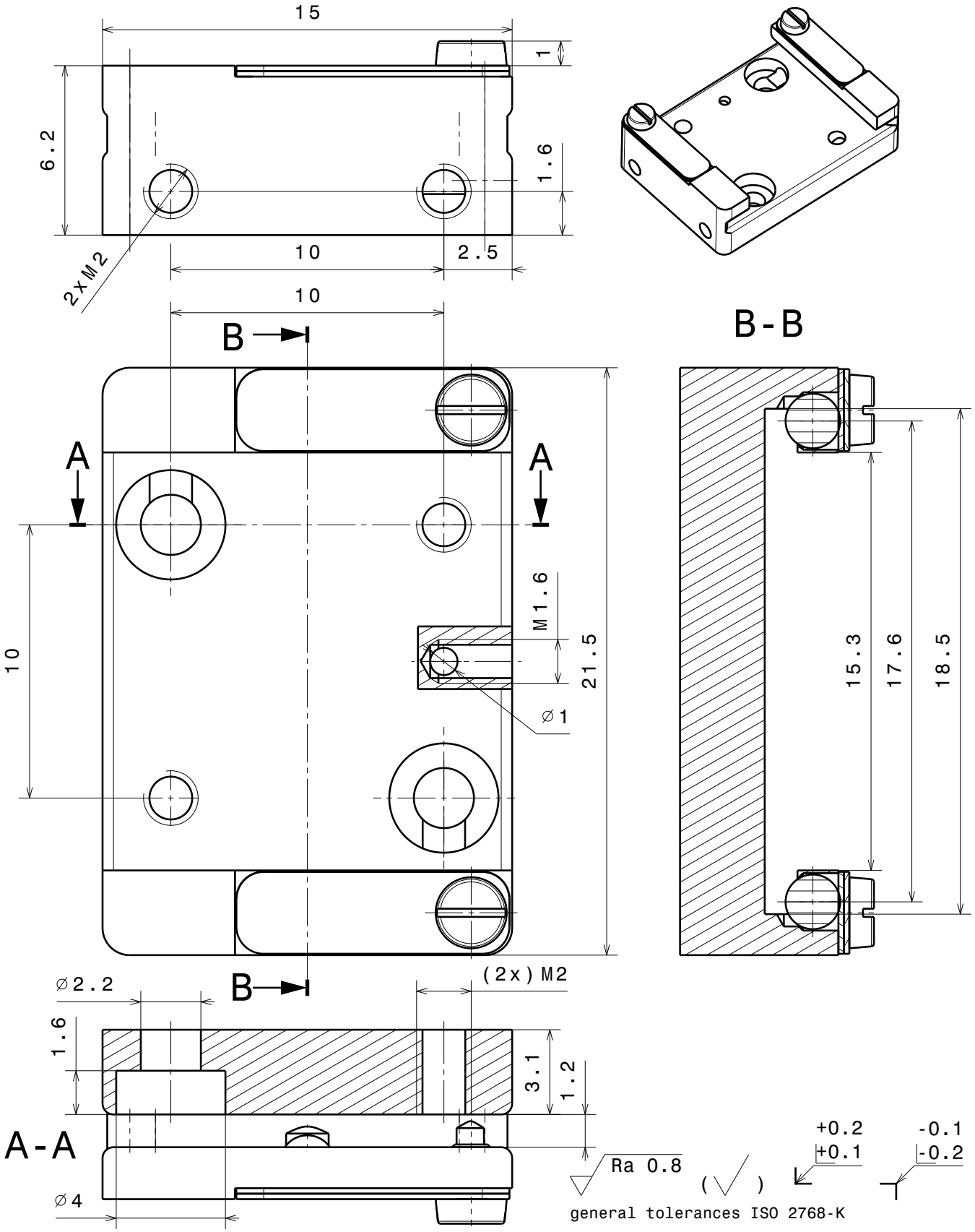

Material: ....

Receptacle for SHOM sample plates

RECOMLT

nominal dimension	over	1	6	30	100	300	1000
	up to	6	30	100	300	1000	2000
tolerance	±	0.05	0.1	0.3	0.5	0.8	1.2

Scale	Drawn	C.Weiss
5:1 (2:1)	Date	08.03.2015
	Changed	22.12.2025 LJ
Rev. E	RECOMLT sheet 1/1	

Ferrovac GmbH
CH-8050 Zurich

THE INFORMATION CONTAINED IN THIS DRAWING IS THE SOLE PROPERTY OF FERROVAC GMBH. ANY REPRODUCTION IN PART OR AS WHOLE WITHOUT OUR PERMISSION IS PROHIBITED.