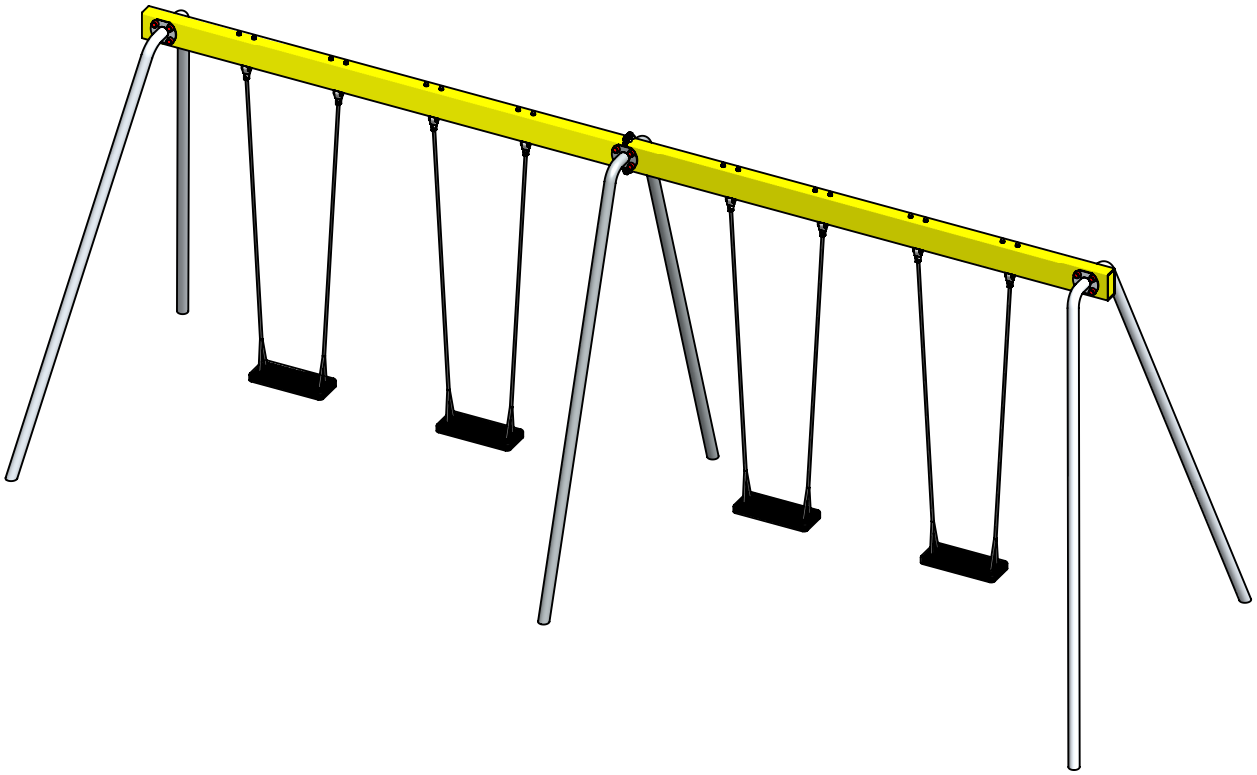

UNLESS OTHERWISE SPECIFIED: DIMENSIONS ARE IN MILLIMETERS WEIGHT ARE IN KILOGRAMM				
	NAME	SIGNATURE	DATE	REVISION
DRAWN	M.Rebase		06.09.2021	
APPV'D				

PART NUMBER / DWG NO.:

K221

DESCRIPTION:

Swing construction EAGLE

READYMADE

Verklighet för drömmar

MATERIAL: metal		A4
WEIGHT:	SCALE: 1:40	SHEET 1 OF 8

safety area

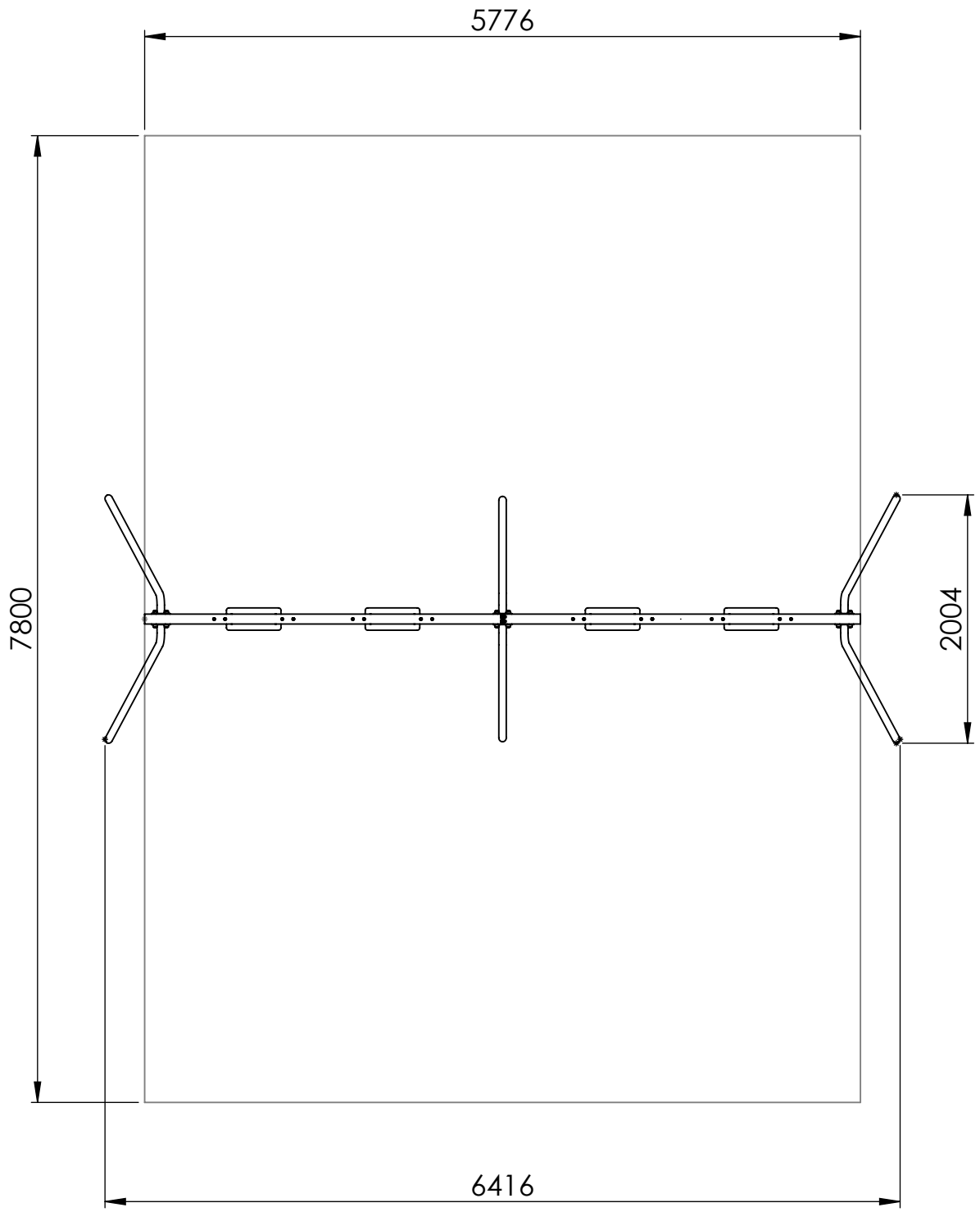

UNLESS OTHERWISE SPECIFIED: DIMENSIONS ARE IN MILLIMETERS WEIGHT ARE IN KILOGRAMM				
	NAME	SIGNATURE	DATE	REVISION
DRAWN	M.Rebase		06.09.2021	
APPV'D				

PART NUMBER / DWG NO.: K221

DESCRIPTION: Swing construction EAGLE

READYMADE

Verklighet för drömmar

MATERIAL: metal		A4
WEIGHT:	SCALE: 1:50	SHEET 2 OF 8

foundation

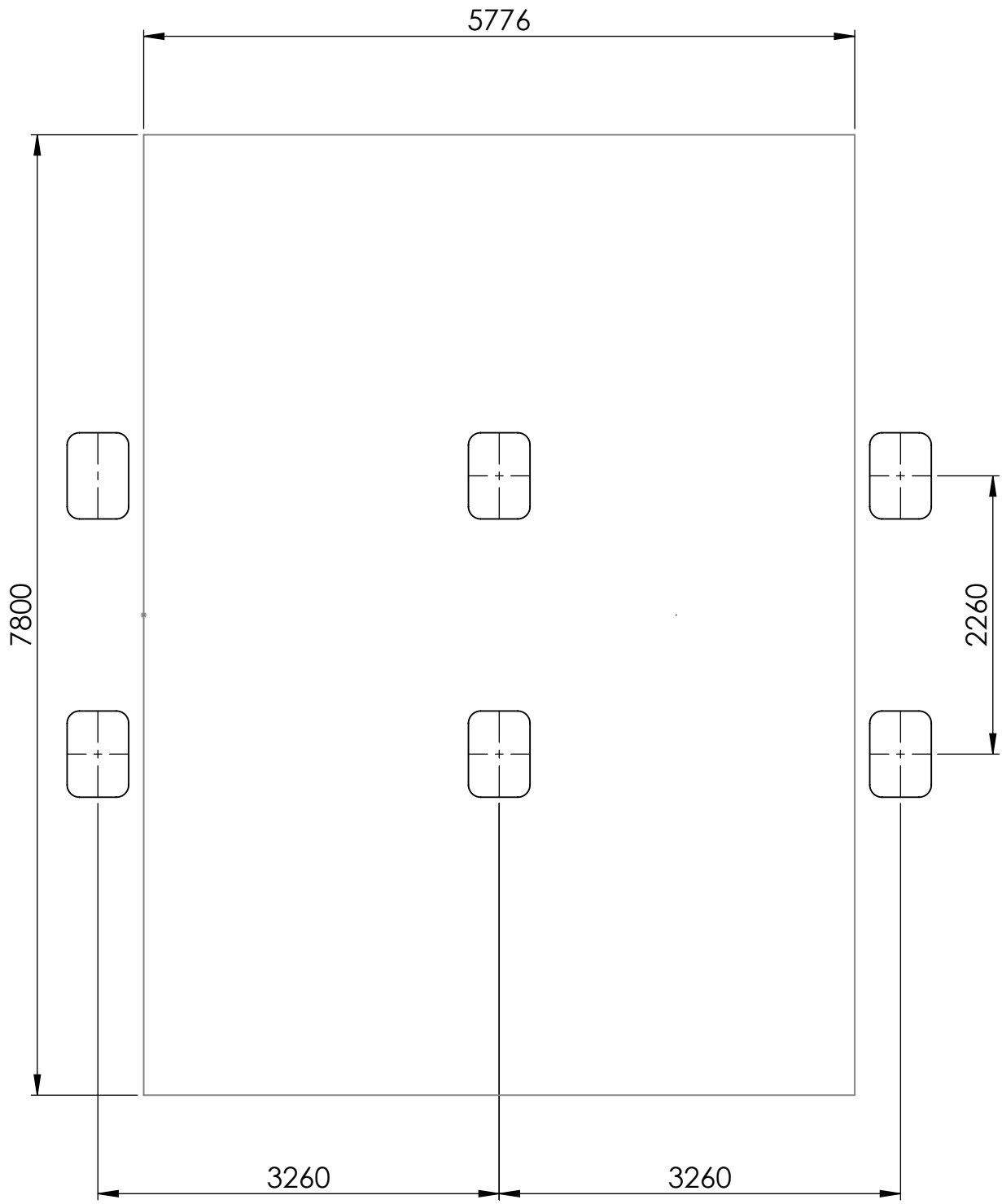

UNLESS OTHERWISE SPECIFIED: DIMENSIONS ARE IN MILLIMETERS WEIGHT ARE IN KILOGRAMM				
	NAME	SIGNATURE	DATE	REVISION
DRAWN	M.Rebase		06.09.2021	
APPV'D				

PART NUMBER / DWG NO.: K221

DESCRIPTION: Swing construction EAGLE

READYMADE

Verklighet för drömmar

MATERIAL: metal		A4
WEIGHT:	SCALE: 1:50	SHEET 3 OF 8

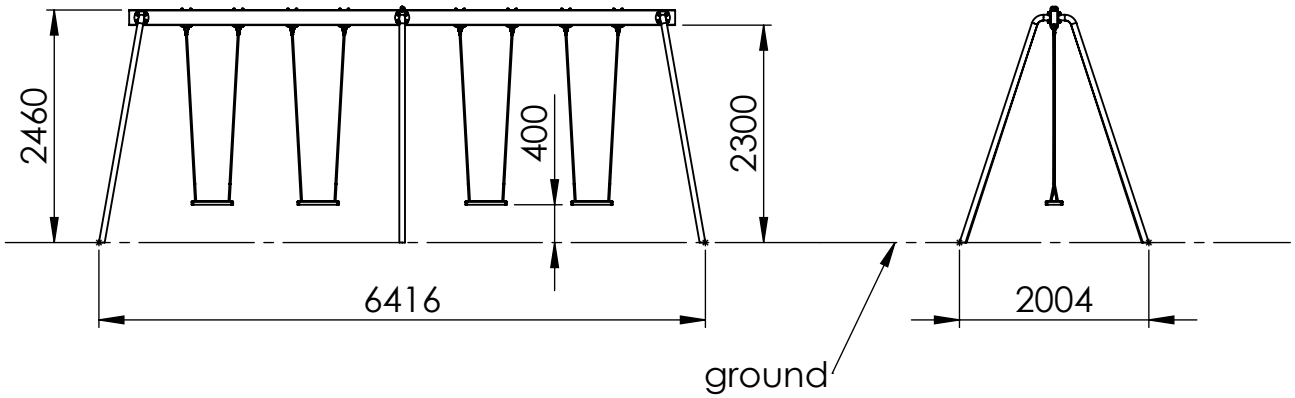

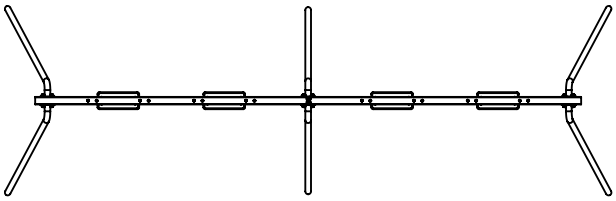

UNLESS OTHERWISE SPECIFIED: DIMENSIONS ARE IN MILLIMETERS WEIGHT ARE IN KILOGRAMM					PART NUMBER / DWG NO.: K221
	NAME	SIGNATURE	DATE	REVISION	
DRAWN	M.Rebase		06.09.2021		DESCRIPTION: Swing construction EAGLE
APPV'D					

READYMADE

Verklighet för drömmar

MATERIAL: metal		A4
WEIGHT:	SCALE: 1:80	SHEET 4 OF 8

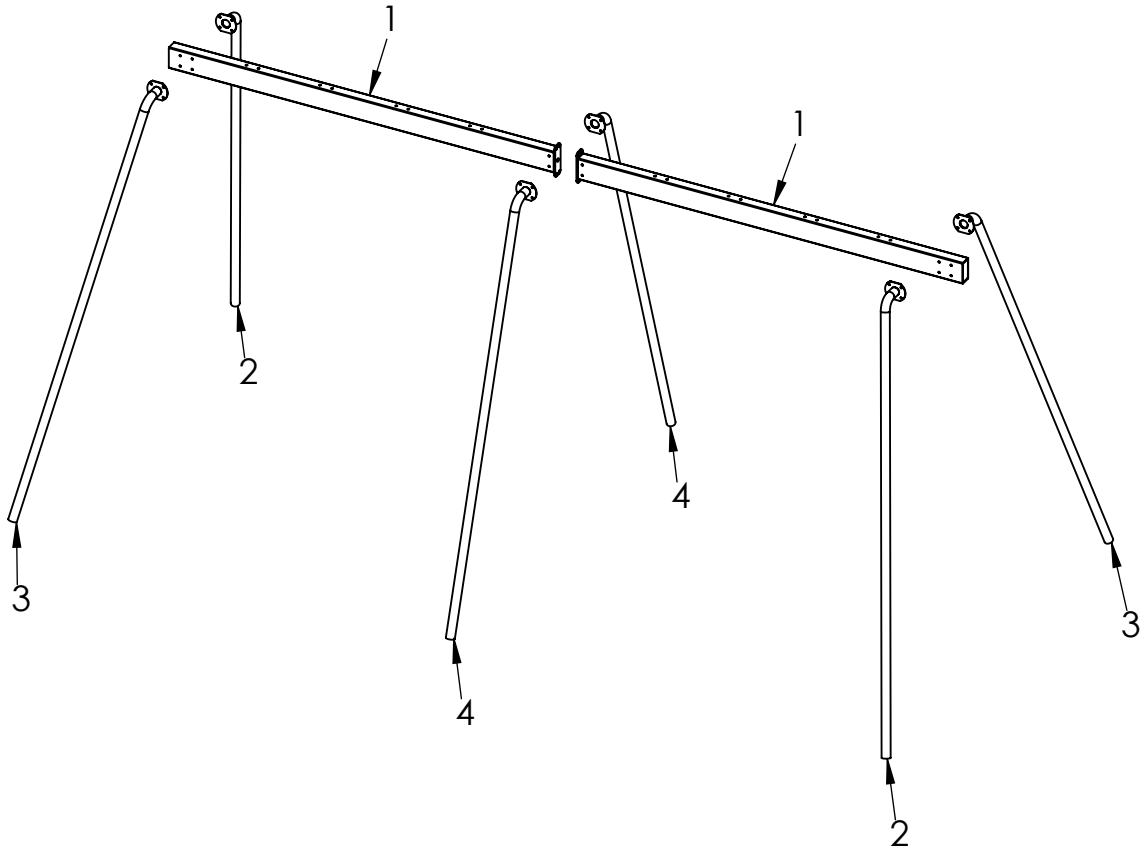

ITEM NO.	PART NUMBER	DESCRIPTION	QTY.
1	beam 80x160x2890	painted steel	2
2	leg_right	galvanized steel	2
3	leg_left	galvanized steel	2
4	leg_straight	galvanized steel	2

UNLESS OTHERWISE SPECIFIED:
DIMENSIONS ARE IN MILLIMETERS
WEIGHT ARE IN KILOGRAMM

	NAME	SIGNATURE	DATE	REVISION
DRAWN	M.Rebase		06.09.2021	
APPV'D				

PART NUMBER / DWG NO.: K221

DESCRIPTION: Swing construction EAGLE

READYMADE
Verklighet för drömmar

MATERIAL: metal

A4

WEIGHT:

SCALE: 1:50

SHEET 5 OF 8

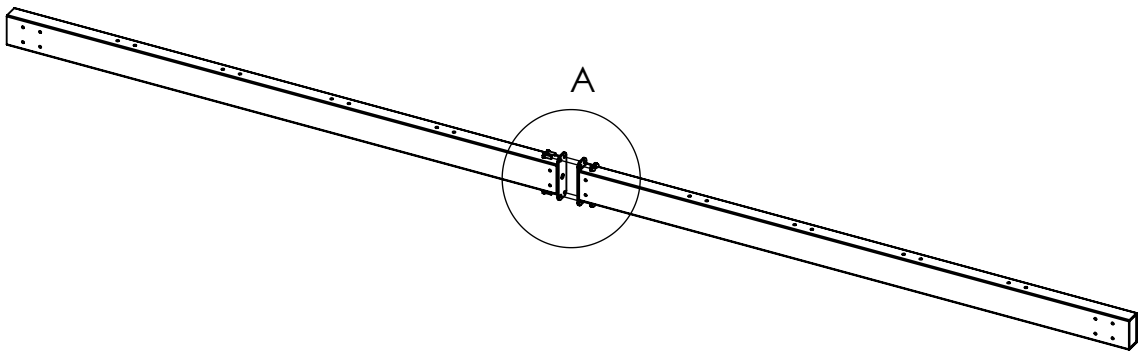

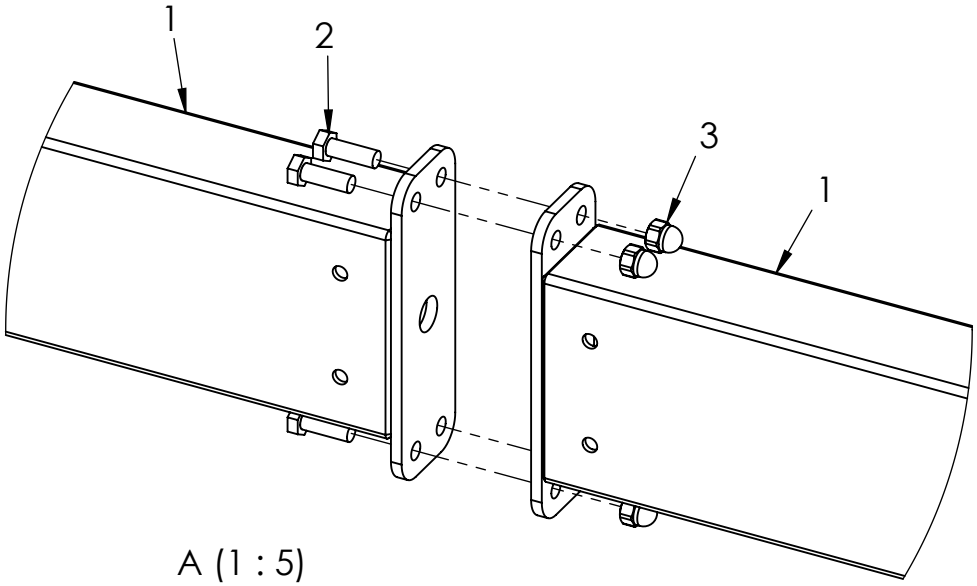

A (1 : 5)

ITEM NO.	PART NUMBER	DESCRIPTION
1	beam 80x160x2890	painted steel
2	bolt M12x35 DIN933	galvanized steel
3	domed cap nut M12 DIN986	galvanized steel

UNLESS OTHERWISE SPECIFIED:
DIMENSIONS ARE IN MILLIMETERS
WEIGHT ARE IN KILOGRAMM

	NAME	SIGNATURE	DATE	REVISION
DRAWN	M.Rebase		06.09.2021	
APPV'D				

PART NUMBER / DWG NO.: K221

DESCRIPTION: Swing construction EAGLE

READYMADE
Verklighet för drömmar

MATERIAL: metal

A4

WEIGHT:

SCALE: 1:35

SHEET 6 OF 8

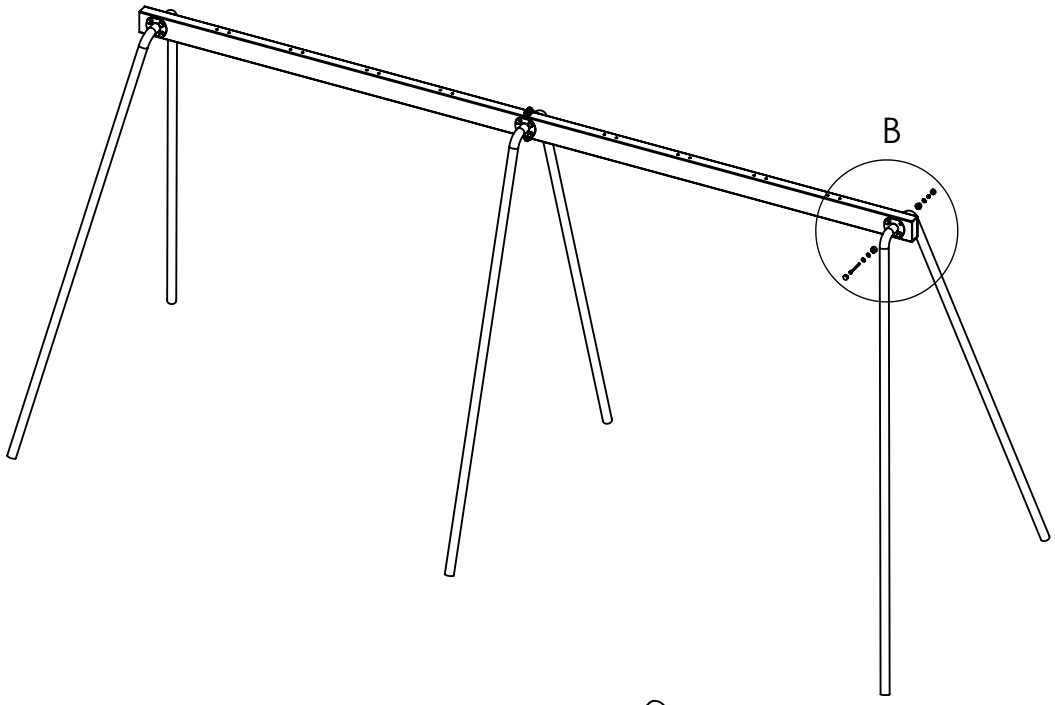

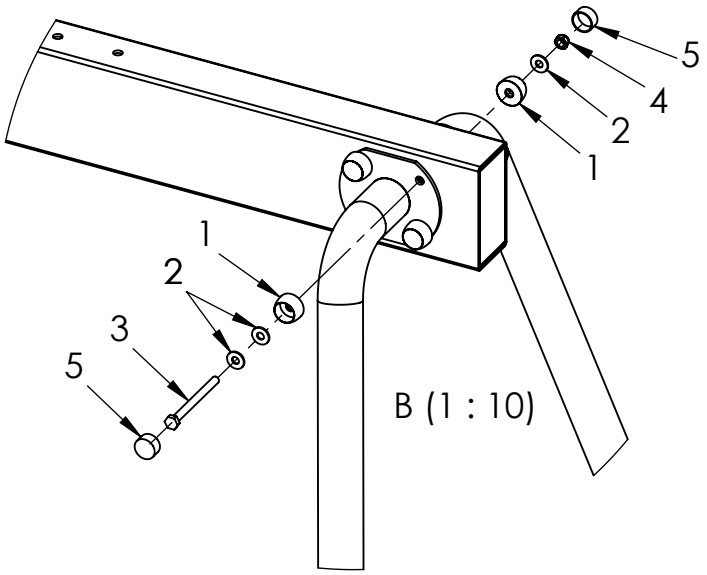

ITEM NO.	PART NUMBER	DESCRIPTION
1	nut cover M12	PE plastic
2	washer M10 DIN9054	stainless steel
3	bolt M10x120 DIN931	galvanized steel
4	nut M10 DIN985	stainless steel
5	nut cover cap M12	PE plastic

UNLESS OTHERWISE SPECIFIED:
DIMENSIONS ARE IN MILLIMETERS
WEIGHT ARE IN KILOGRAMM

	NAME	SIGNATURE	DATE	REVISION
DRAWN	M.Rebase		06.09.2021	
APPV'D				

PART NUMBER / DWG NO.: K221

DESCRIPTION: Swing construction EAGLE

READYMADE
Verklighet för drömmar

MATERIAL: metal

A4

WEIGHT:

SCALE: 1:50

SHEET 7 OF 8

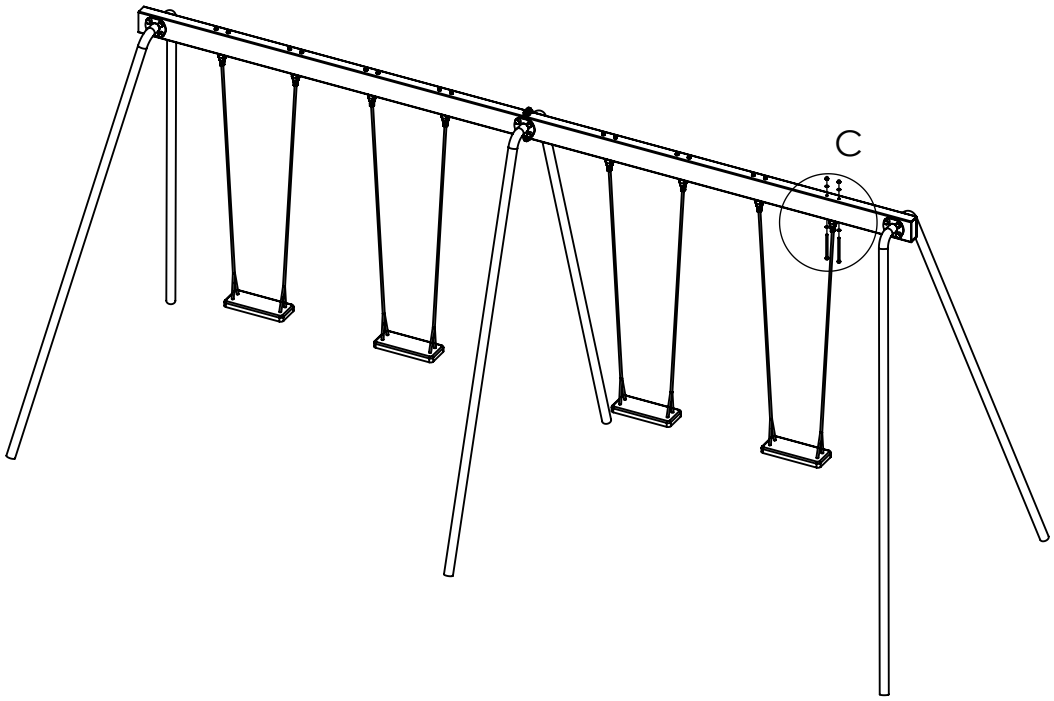

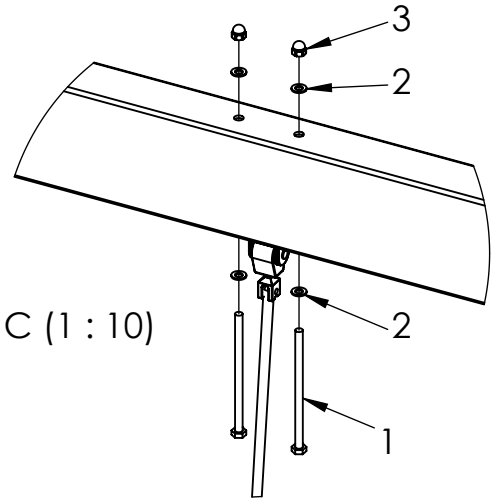

C (1 : 10)

ITEM NO.	PART NUMBER	DESCRIPTION
1	bolt M10x180 DIN931	galvanized steel
2	washer M10 DIN125	galvanized steel
3	domed cap nut M10 DIN986	galvanized steel

UNLESS OTHERWISE SPECIFIED:
DIMENSIONS ARE IN MILLIMETERS
WEIGHT ARE IN KILOGRAMM

	NAME	SIGNATURE	DATE	REVISION
DRAWN	M.Rebase		06.09.2021	
APPV'D				

PART NUMBER / DWG NO.: K221

DESCRIPTION: Swing construction EAGLE

READYMADE
Verklighet för drömmar

MATERIAL: metal

A4

WEIGHT:

SCALE: 1:50

SHEET 8 OF 8