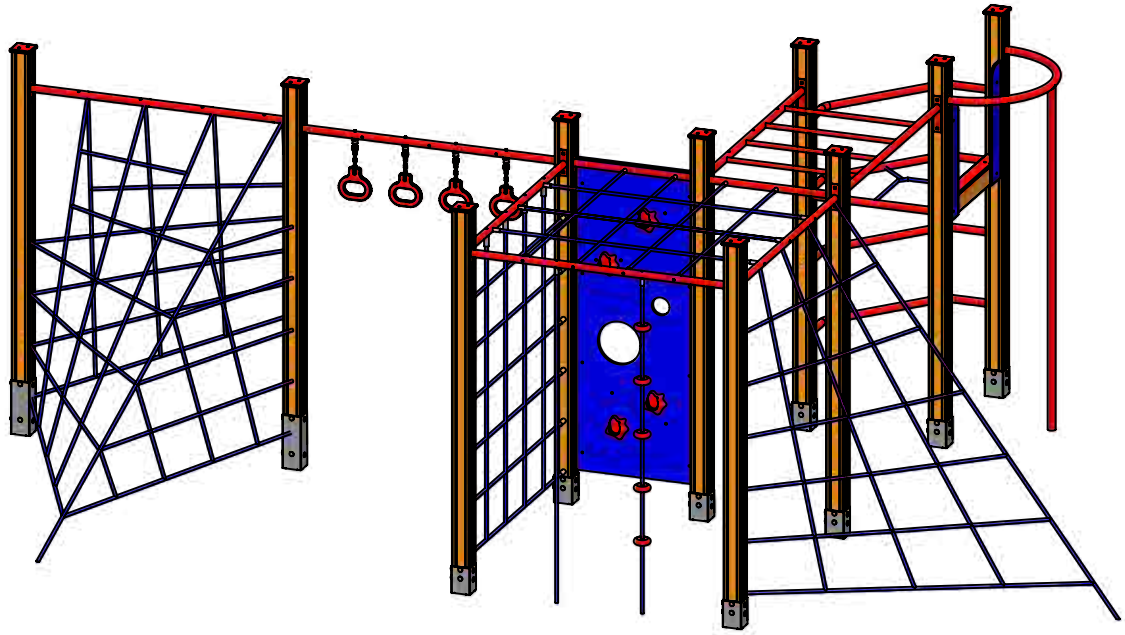

UNLESS OTHERWISE SPECIFIED: DIMENSIONS ARE IN MILLIMETERS WEIGHT ARE IN KILOGRAMM				
	NAME	SIGNATURE	DATE	REVISION
DRAWN	M.Rebase		03.10.2023	
APPV'D				

PART NUMBER / DWG NO.:

RS125L

DESCRIPTION:

Climbing Frame GIBBON L

READYMADE

Verklighet för drömmar

MATERIAL:		A4
WEIGHT:	SCALE: 1:40	SHEET 1 OF 26

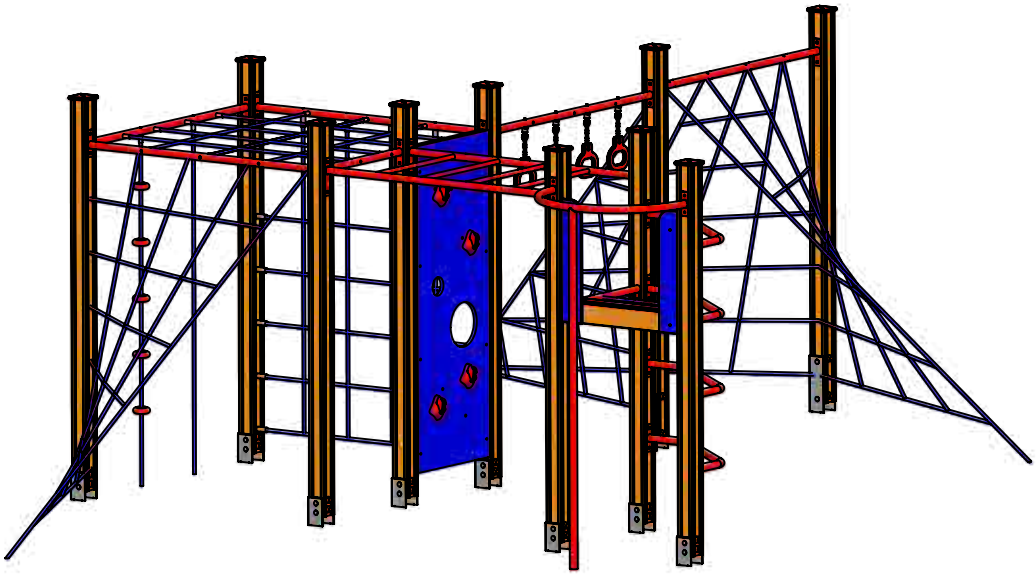

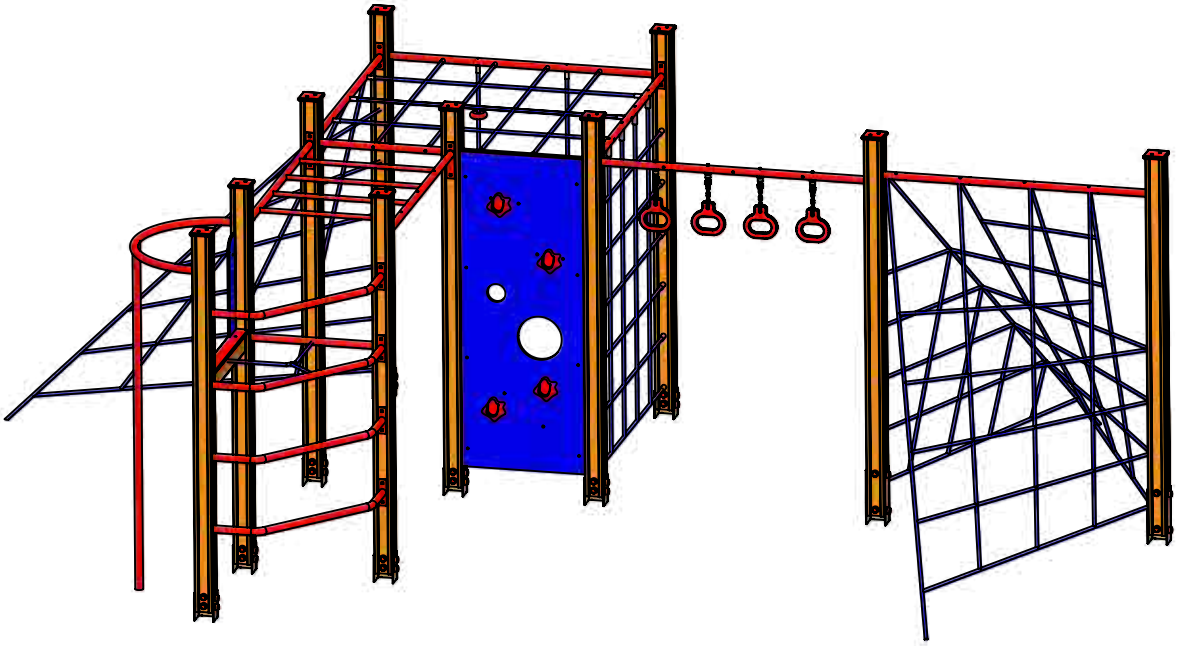

UNLESS OTHERWISE SPECIFIED:
DIMENSIONS ARE IN MILLIMETERS
WEIGHT ARE IN KILOGRAMM

	NAME	SIGNATURE	DATE	REVISION
DRAWN	M.Rebase		03.10.2023	
APPV'D				

PART NUMBER / DWG NO.:

RS125L

DESCRIPTION:

Climbing Frame GIBBON L

READYMADE

Verklighet för drömmar

MATERIAL:

A4

WEIGHT:

SCALE: 1:40

SHEET 2 OF 26

safety area

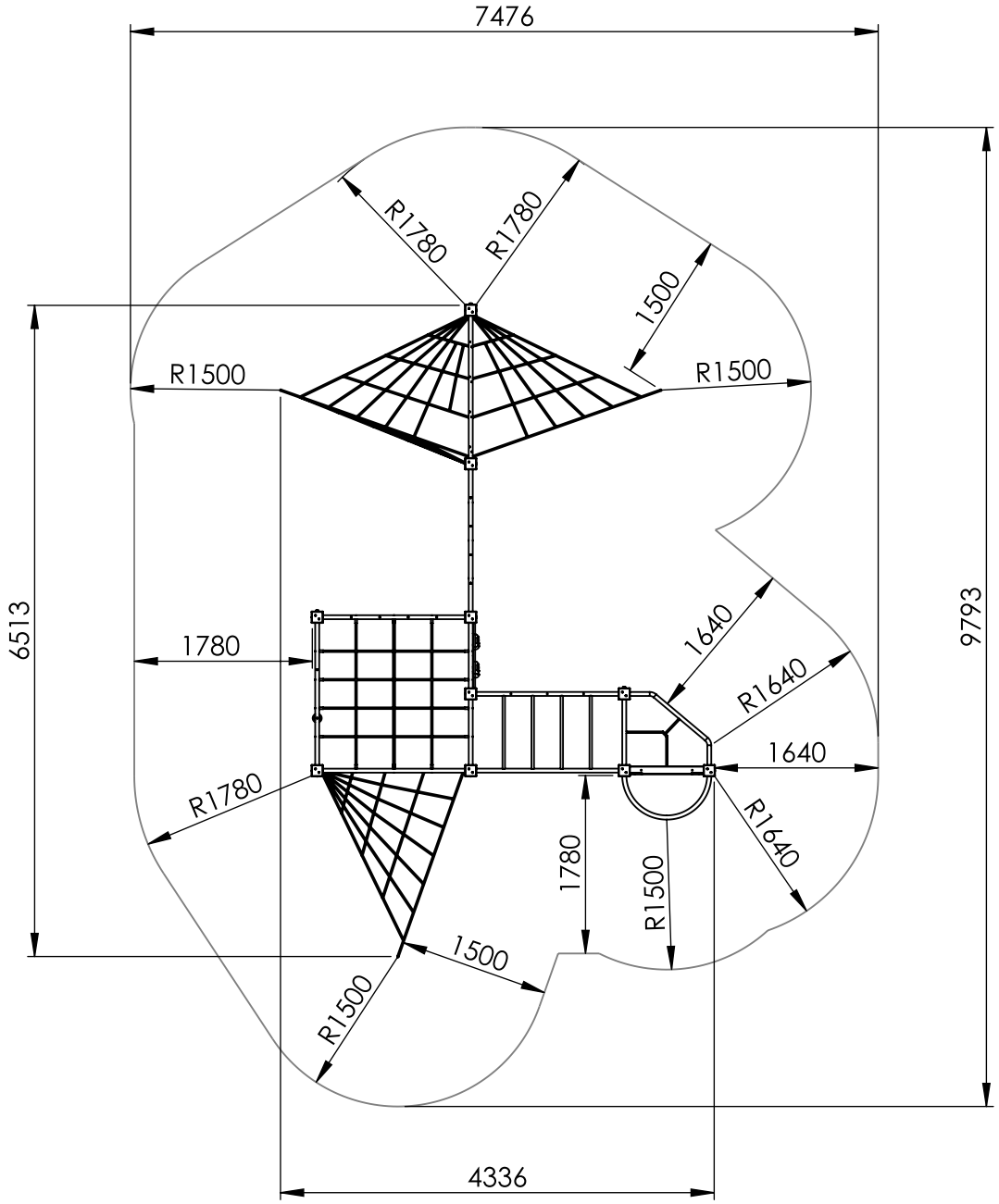

UNLESS OTHERWISE SPECIFIED: DIMENSIONS ARE IN MILLIMETERS WEIGHT ARE IN KILOGRAMM					PART NUMBER / DWG NO.: RS125L
	NAME	SIGNATURE	DATE	REVISION	
DRAWN	M.Rebase		03.10.2023		DESCRIPTION: Climbing Frame GIBBON L
APPV'D					

READYMADE

Verklighet för drömmar

MATERIAL:		A4
WEIGHT:	SCALE: 1:70	SHEET 3 OF 26

foundation

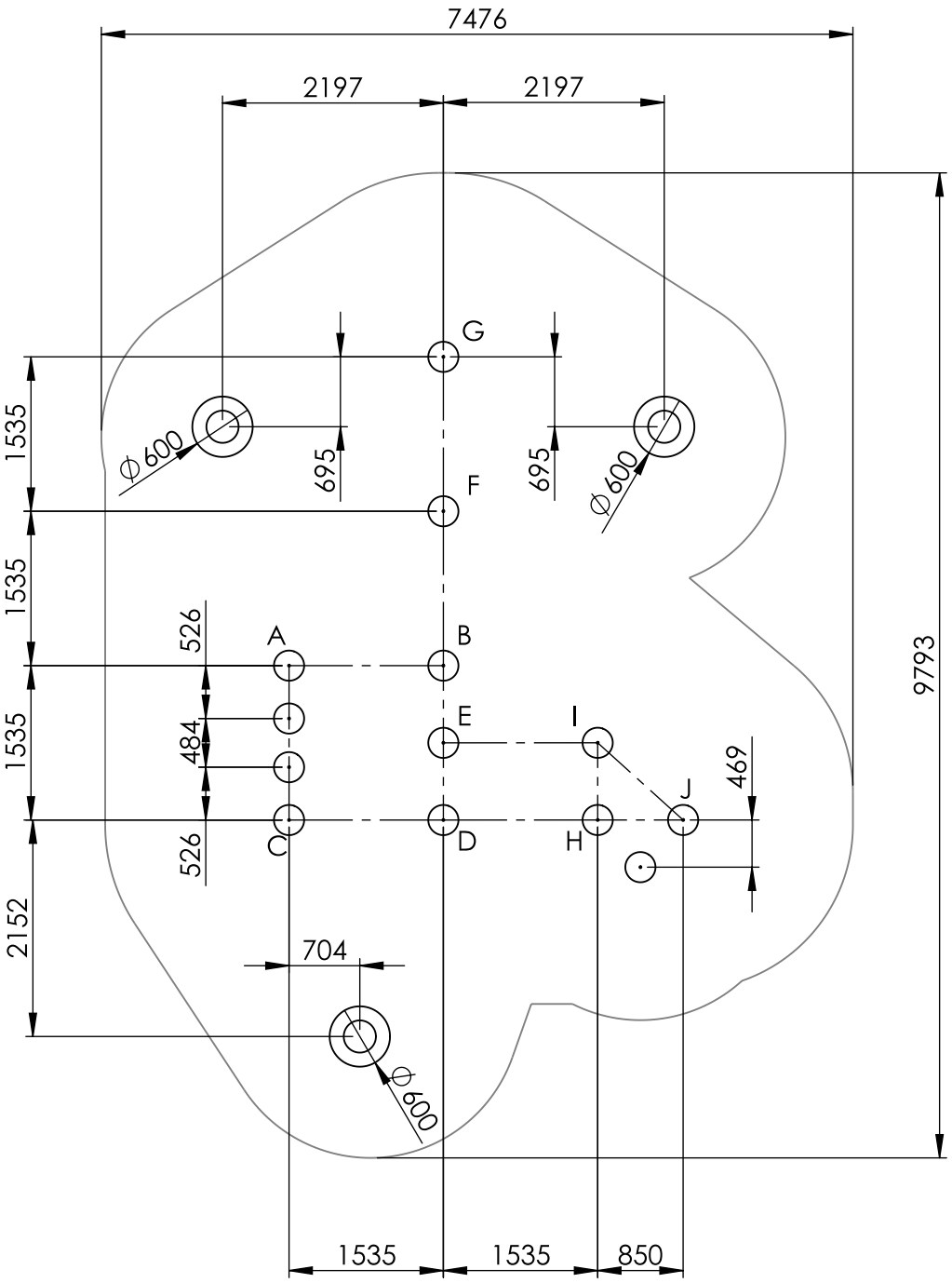

depth of foundatin 700mm

UNLESS OTHERWISE SPECIFIED: DIMENSIONS ARE IN MILLIMETERS WEIGHT ARE IN KILOGRAMM				
	NAME	SIGNATURE	DATE	REVISION
DRAWN	M.Rebase		03.10.2023	
APPV'D				

PART NUMBER / DWG NO.: RS125L

DESCRIPTION: Climbing Frame GIBBON L

READYMADE

Verklighet för drömmar

MATERIAL:

A4

WEIGHT:

SCALE: 1:70

SHEET 4 OF 26

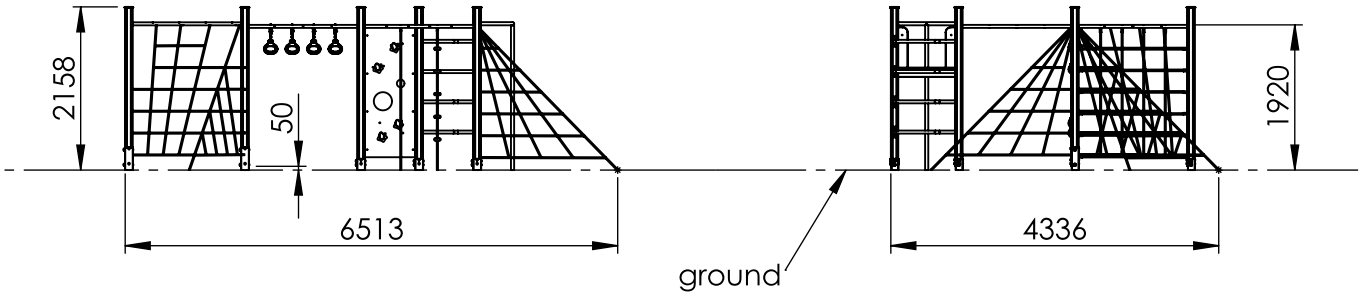

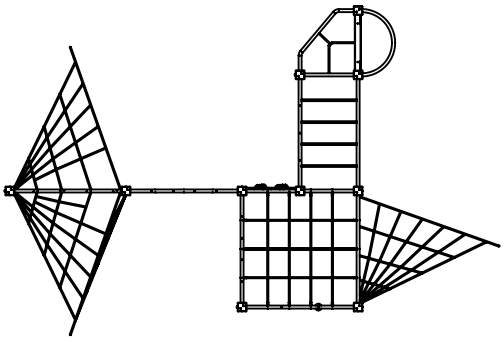

UNLESS OTHERWISE SPECIFIED: DIMENSIONS ARE IN MILLIMETERS WEIGHT ARE IN KILOGRAMM				
	NAME	SIGNATURE	DATE	REVISION
DRAWN	M.Rebase		03.10.2023	
APPV'D				

PART NUMBER / DWG NO.:

RS125L

DESCRIPTION:

Climbing Frame GIBBON L

READYMADE

Verklighet för drömmar

MATERIAL:		A4
WEIGHT:	SCALE: 1:100	SHEET 5 OF 26

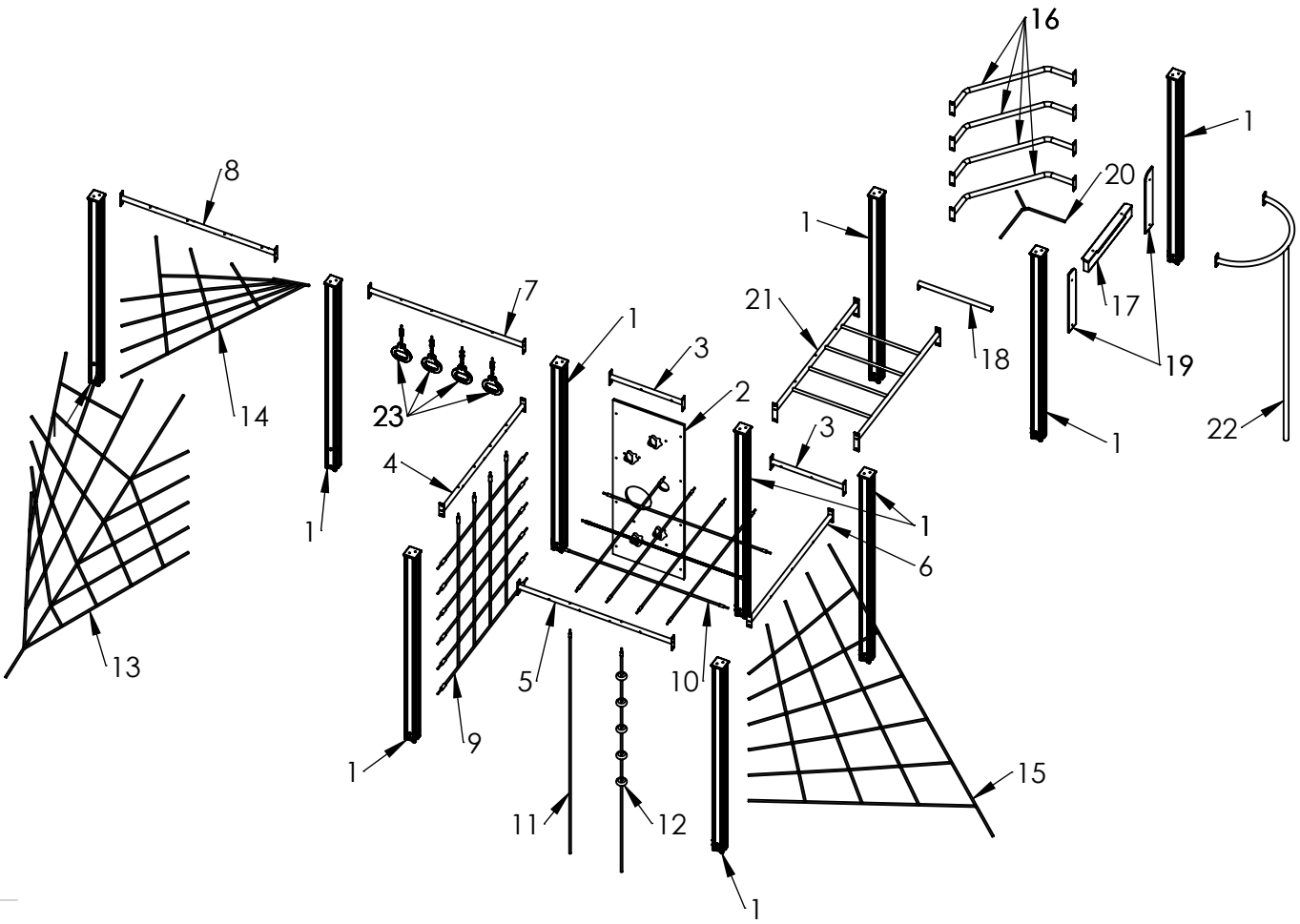

UNLESS OTHERWISE SPECIFIED: DIMENSIONS ARE IN MILLIMETERS WEIGHT ARE IN KILOGRAMM					PART NUMBER / DWG NO.: RS125L
	NAME	SIGNATURE	DATE	REVISION	
DRAWN	M.Rebase		03.10.2023		DESCRIPTION: Climbing Frame GIBBON L
APPV'D					

READYMADE

Verklighet för drömmar

MATERIAL:		A4
WEIGHT:	SCALE: 1:60	SHEET 6 OF 26

ITEM NO.	PART NUMBER	QTY.
1	post 98x98x2100	10
2	climbing wall 670x1750	1
3	beam ∅40x687	2
4	beam ∅40x1455 A-B	1
5	beam ∅40x1455 A-C	1
6	beam ∅40x1455 C-D	1
7	beam 40x1455 monkey	1
8	beam ∅40x1455	1
9	climbing net 1455x1705	1
10	climbing net 1495x1495	1
11	climbing rope	1
12	climbing rope with knots	1
13	climbing net 1	1
14	climbing net 2	1
15	climbing net 2050x2795	1
16	beam ∅40x1120	4
17	beam 45x110x770	1
18	guardrail ∅25x770	1
19	panel 850x126	2
20	climbing net 470x530	1
21	ladder_horizontal 812x1455	1
22	climbing pole	1
23	hanging rings	4

UNLESS OTHERWISE SPECIFIED:
DIMENSIONS ARE IN MILLIMETERS
WEIGHT ARE IN KILOGRAMM

	NAME	SIGNATURE	DATE	REVISION
DRAWN	M.Rebase		03.10.2023	
APPV'D				

PART NUMBER / DWG NO.: RS125L

DESCRIPTION: Climbing Frame GIBBON L

READYMADE
Verklighet för drömmar

MATERIAL:

A4

WEIGHT:

SCALE: 1:60

SHEET 7 OF 26

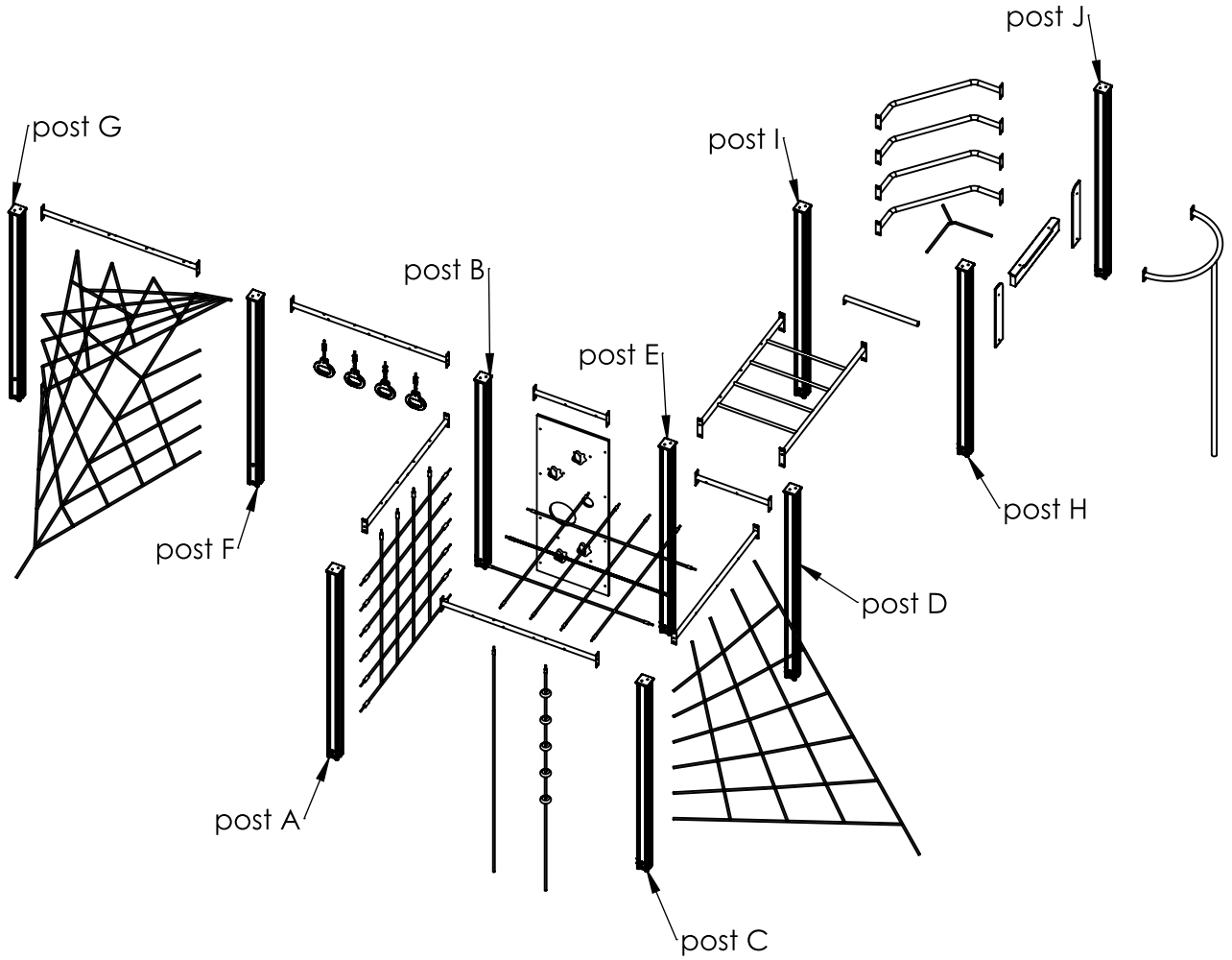

UNLESS OTHERWISE SPECIFIED: DIMENSIONS ARE IN MILLIMETERS WEIGHT ARE IN KILOGRAMM					PART NUMBER / DWG NO.: RS125L
	NAME	SIGNATURE	DATE	REVISION	
DRAWN	M.Rebase		03.10.2023		DESCRIPTION: Climbing Frame GIBBON L
APPV'D					

READYMADE

Verklighet för drömmar

MATERIAL:		A4
WEIGHT:	SCALE: 1:60	SHEET 8 OF 26

ground fixing direction

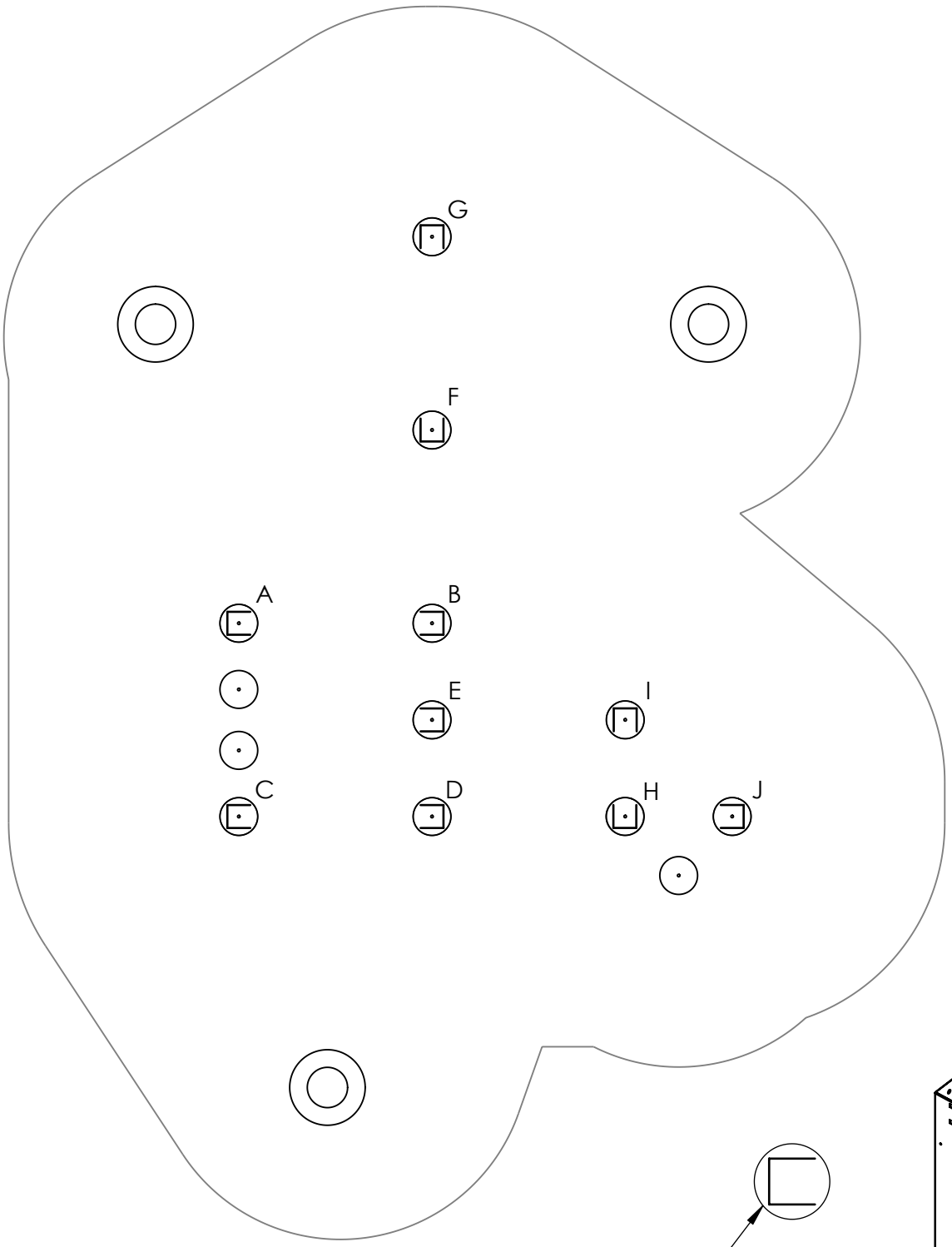

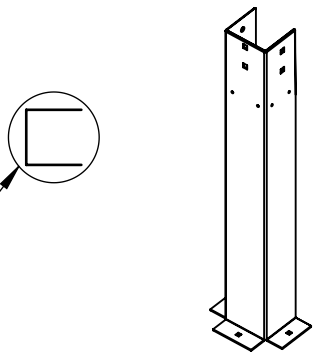

This shows which way goes ground fixing.
Ground fixing has to match with correct post.
Both are marked with same letter.

UNLESS OTHERWISE SPECIFIED: DIMENSIONS ARE IN MILLIMETERS WEIGHT ARE IN KILOGRAMM					PART NUMBER / DWG NO.: RS125L
	NAME	SIGNATURE	DATE	REVISION	
DRAWN	M.Rebase		03.10.2023		DESCRIPTION: Climbing Frame GIBBON L
APPV'D					

READYMADE
Verklighet för drömmar

MATERIAL:		A4
WEIGHT:	SCALE: 1:50	SHEET 9 OF 26

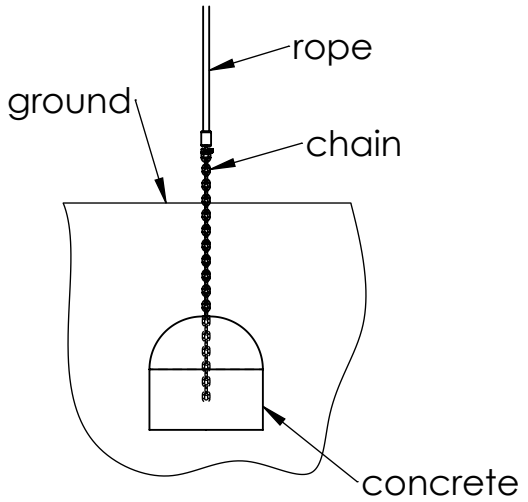

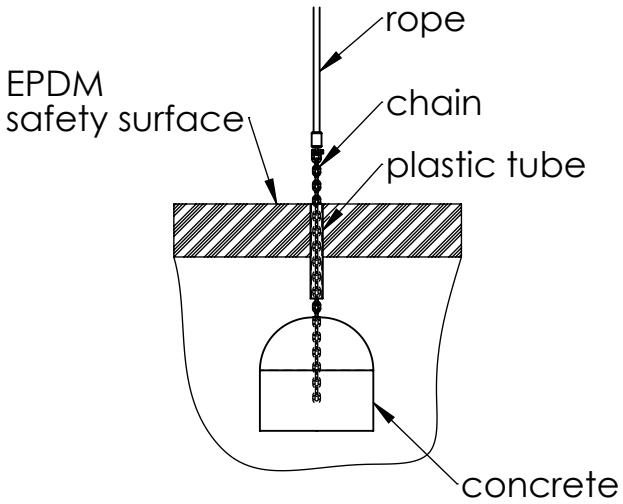

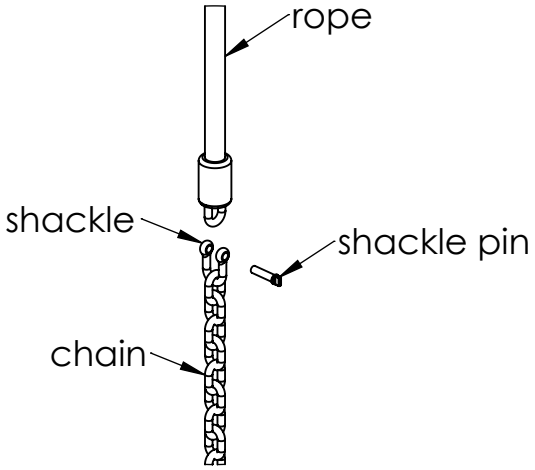

1.Hang and fix the chain in the right place and pour concrete.
2.In the case of EPDM, first put the chain through the plastic tube.
3.Tighten the rope and fasten it to the chain with a shackle
(you may have to cut the chain shorter).
3.Fill the area with sand or other suitable material
(in the case of EPDM, cut the plastic tube to the same level with the surface)

UNLESS OTHERWISE SPECIFIED: DIMENSIONS ARE IN MILLIMETERS WEIGHT ARE IN KILOGRAMM					PART NUMBER / DWG NO.: RS125L
	NAME	SIGNATURE	DATE	REVISION	
DRAWN	M.Rebase		03.10.2023		DESCRIPTION: Climbing Frame GIBBON L
APPV'D					

READYMADE
Verklighet för drömmar

MATERIAL:		A4
WEIGHT:	SCALE: 1:50	SHEET 10 OF 26

Post A, B, C, D, E, H, I, J

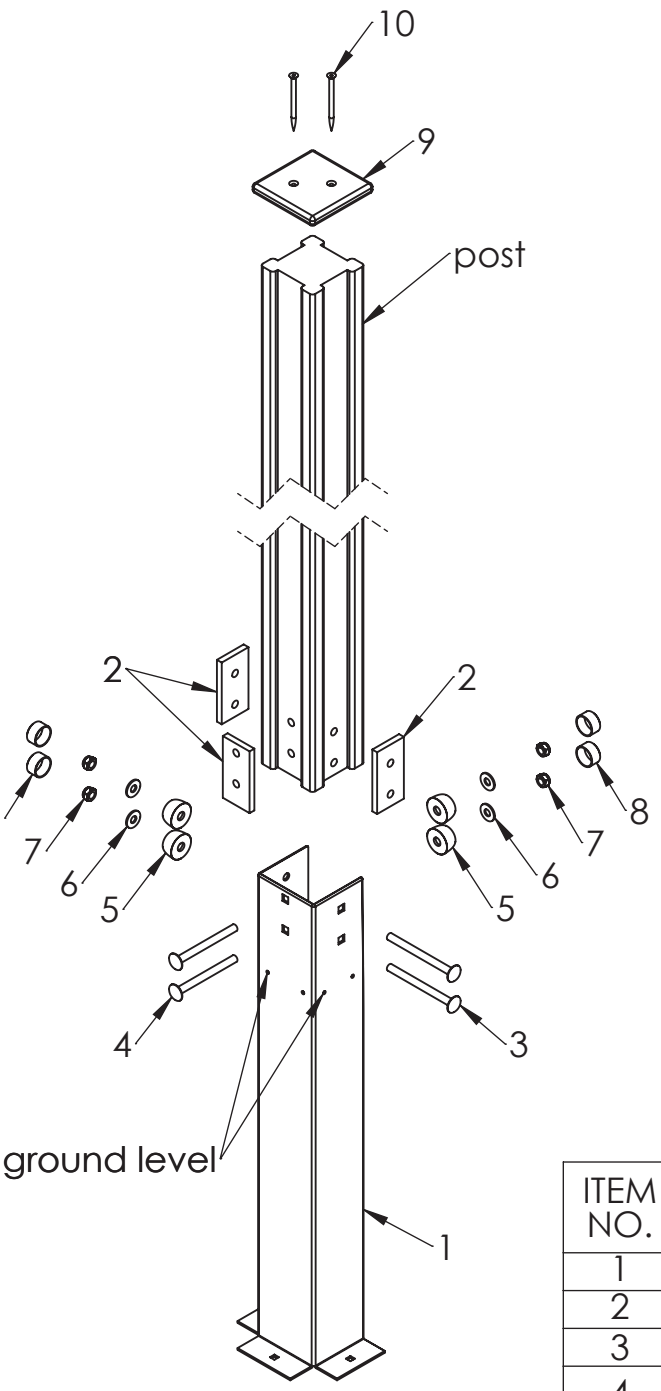

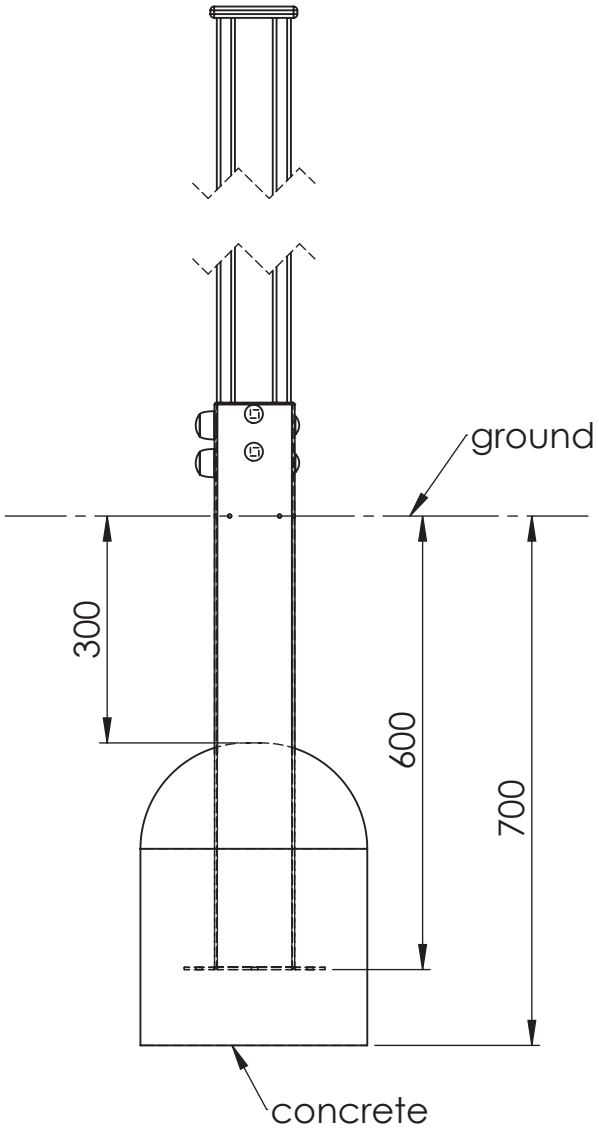

ITEM NO.	PART NUMBER
1	ground fixture L-750
2	plastic detail for ground fixture
3	bolt M10x120 DIN603
4	bolt M10x110 DIN603
5	nut cover M12
6	washer M10 DIN9054
7	nut M10 DIN985
8	nut cover cap M12
9	plastic cap 115x115
10	wood screw 6x90 for wooden post wood screw 6x90 for aluminium post

UNLESS OTHERWISE SPECIFIED:
DIMENSIONS ARE IN MILLIMETERS
WEIGHT ARE IN KILOGRAMM

	NAME	SIGNATURE	DATE	REVISION
DRAWN	M.Rebase		03.10.2023	
APPV'D				

PART NUMBER / DWG NO.: RS125L

DESCRIPTION: Climbing Frame GIBBON L

READYMADE
Verklighet för drömmar

MATERIAL:

A4

WEIGHT:

SCALE: 1:50

SHEET 11 OF 26

Post F, G

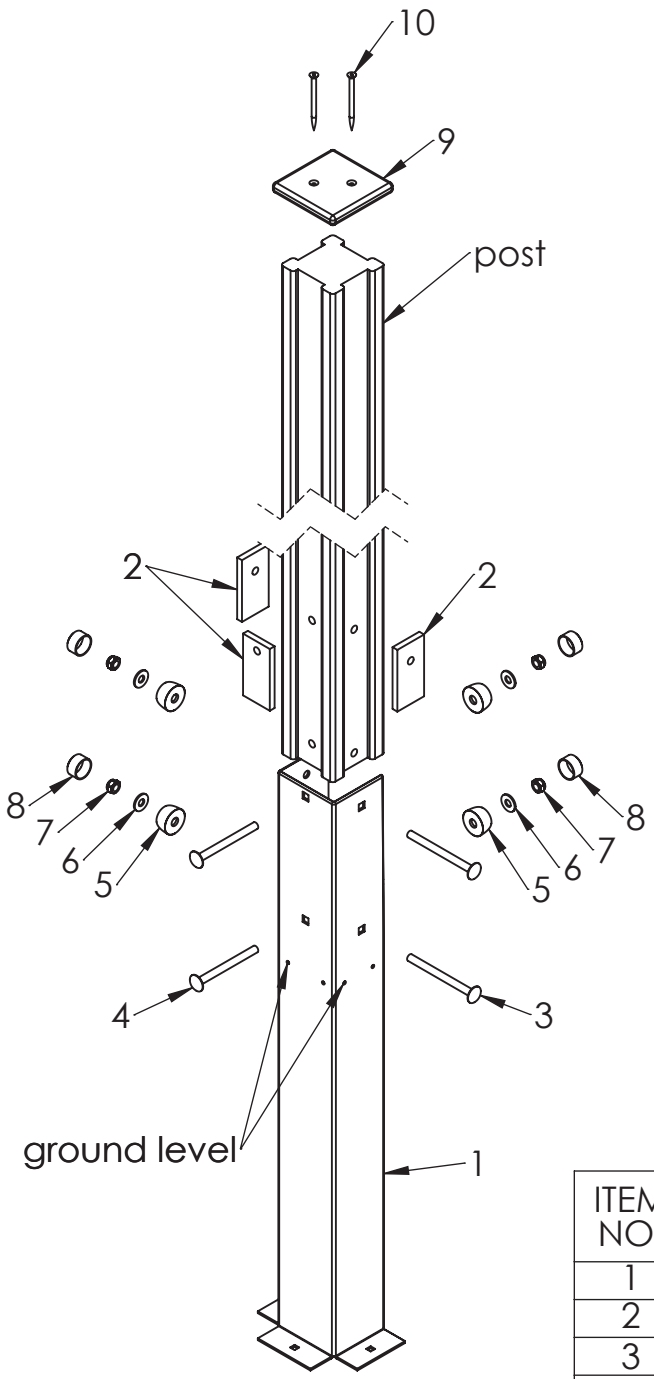

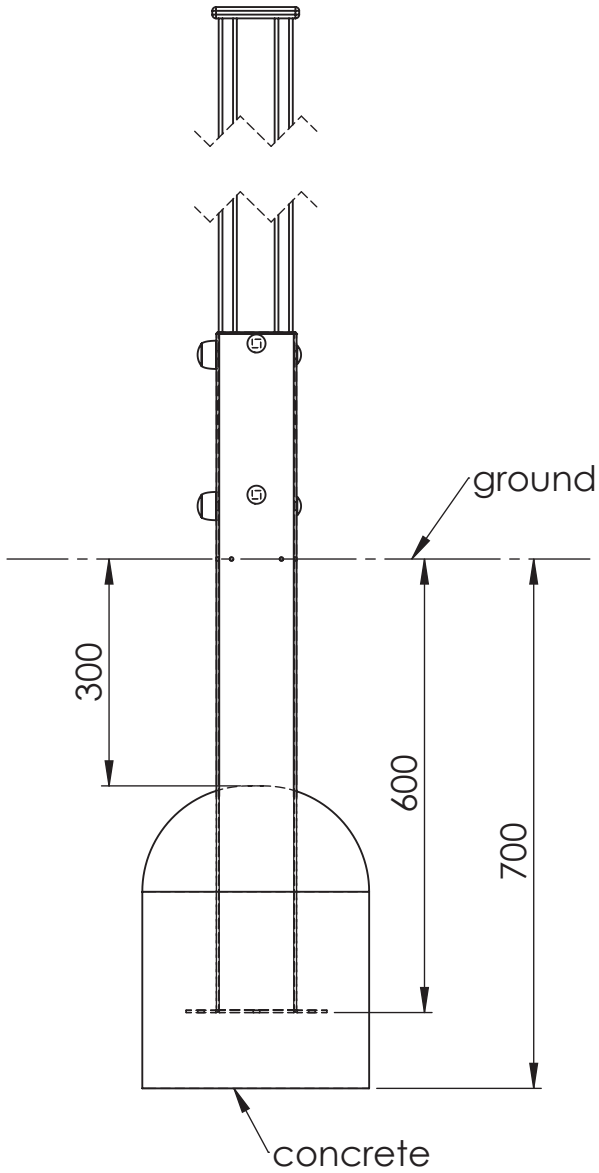

ITEM NO.	PART NUMBER
1	ground fixture L-900
2	plastic detail for ground fixture
3	bolt M10x120 DIN603
4	bolt M10x110 DIN603
5	nut cover M12
6	washer M10 DIN9054
7	nut M10 DIN985
8	nut cover cap M12
9	plastic cap 115x115
10	wood screw 6x90 for wooden post wood screw 6x90 for aluminium post

UNLESS OTHERWISE SPECIFIED:
DIMENSIONS ARE IN MILLIMETERS
WEIGHT ARE IN KILOGRAMM

	NAME	SIGNATURE	DATE	REVISION
DRAWN	M.Rebase		03.10.2023	
APPV'D				

PART NUMBER / DWG NO.:
RS125L

DESCRIPTION:
Climbing Frame GIBBON L

READYMADE
Verklighet för drömmar

MATERIAL:

A4

WEIGHT:

SCALE: 1:50

SHEET 12 OF 26

The tubes have to be at the same height

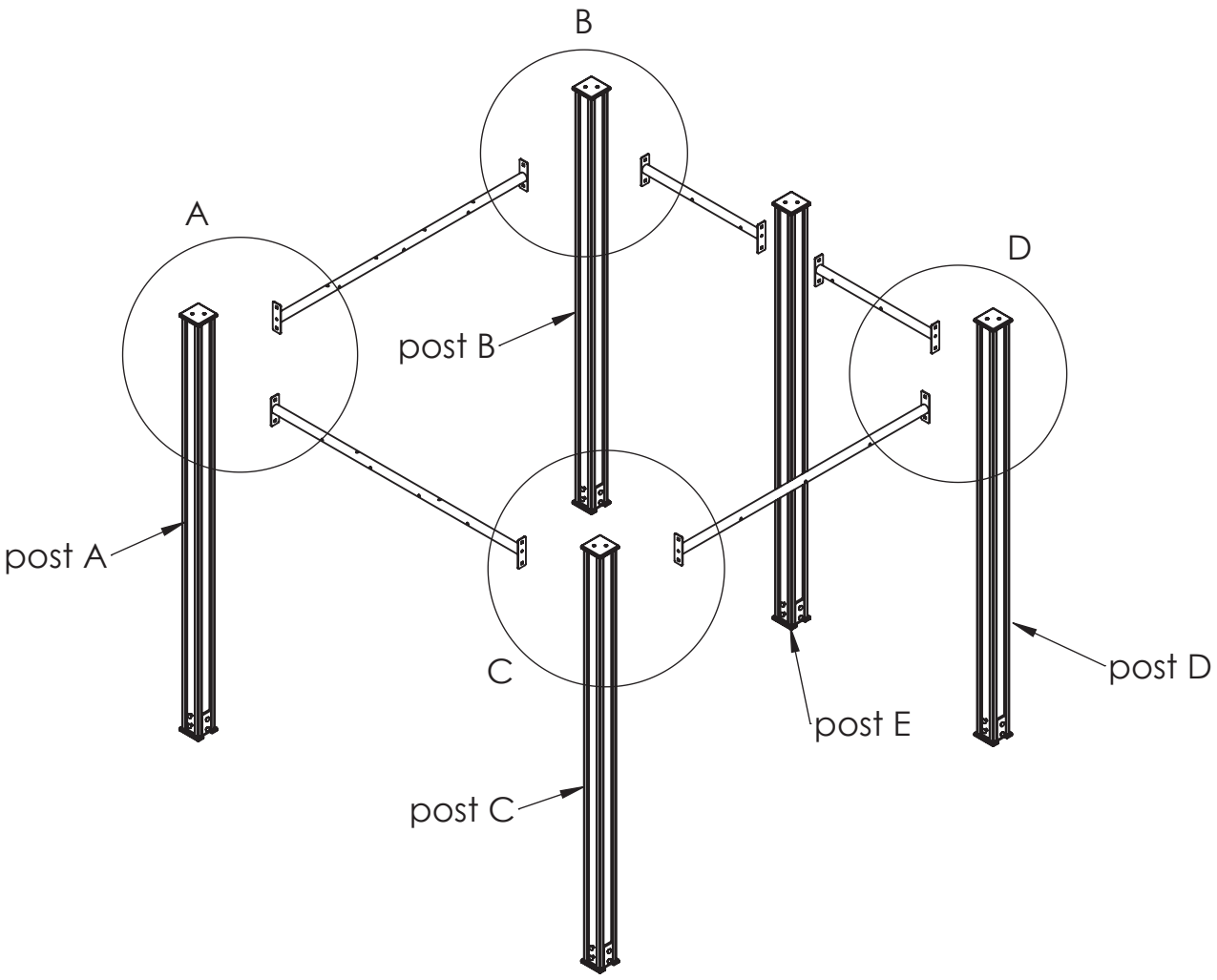

UNLESS OTHERWISE SPECIFIED: DIMENSIONS ARE IN MILLIMETERS WEIGHT ARE IN KILOGRAMM					PART NUMBER / DWG NO.: RS125L
	NAME	SIGNATURE	DATE	REVISION	
DRAWN	M.Rebase		03.10.2023		DESCRIPTION: Climbing Frame GIBBON L
APPV'D					

READYMADE

Verklighet för drömmar

MATERIAL:		A4
WEIGHT:	SCALE: 1:50	SHEET 13 OF 26

DETAIL A
SCALE 1 : 10

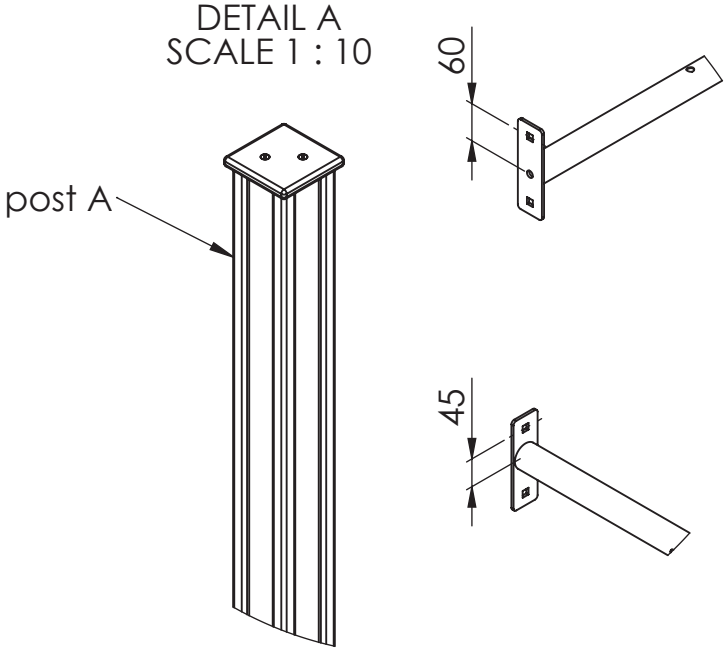

DETAIL B
SCALE 1 : 10

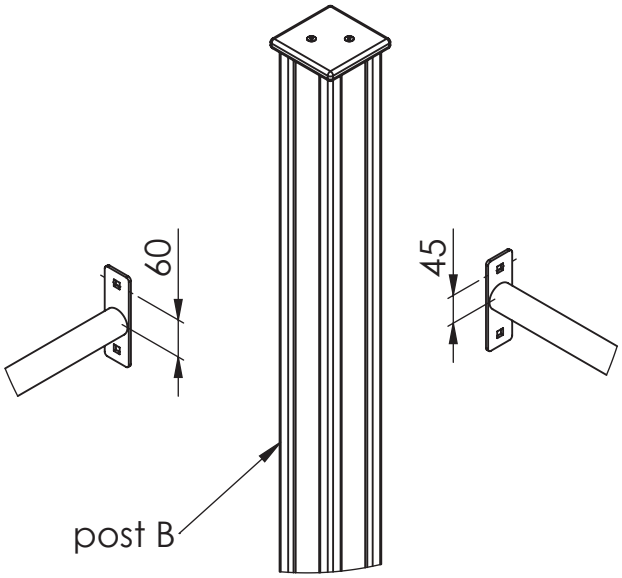

UNLESS OTHERWISE SPECIFIED:
DIMENSIONS ARE IN MILLIMETERS
WEIGHT ARE IN KILOGRAMM

	NAME	SIGNATURE	DATE	REVISION
DRAWN	M.Rebase		03.10.2023	
APPV'D				

PART NUMBER / DWG NO.:
RS125L

DESCRIPTION:
Climbing Frame GIBBON L

READYMADE
Verklighet för drömmar

MATERIAL:

A4

WEIGHT:

SCALE: 1:50

SHEET 14 OF 26

DETAIL C
SCALE 1 : 10

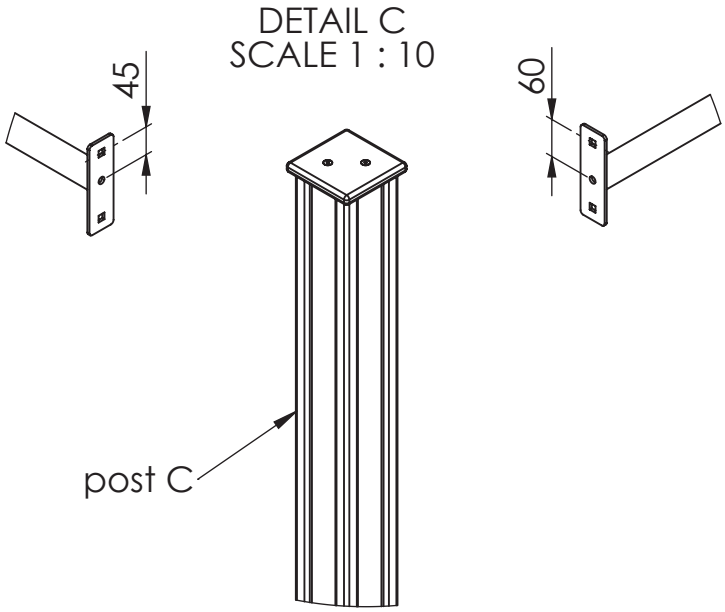

DETAIL D
SCALE 1 : 10

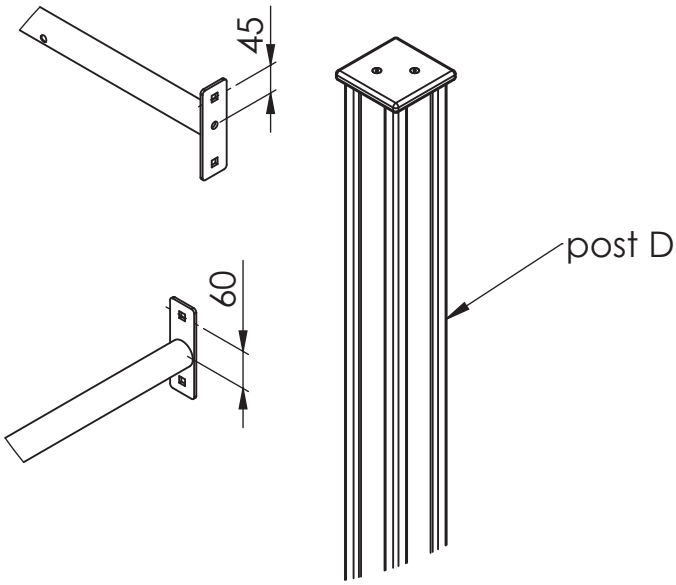

UNLESS OTHERWISE SPECIFIED:
DIMENSIONS ARE IN MILLIMETERS
WEIGHT ARE IN KILOGRAMM

	NAME	SIGNATURE	DATE	REVISION
DRAWN	M.Rebase		03.10.2023	
APPV'D				

PART NUMBER / DWG NO.: RS125L

DESCRIPTION: Climbing Frame GIBBON L

READYMADE
Verklighet för drömmar

MATERIAL:

A4

WEIGHT:

SCALE: 1:50

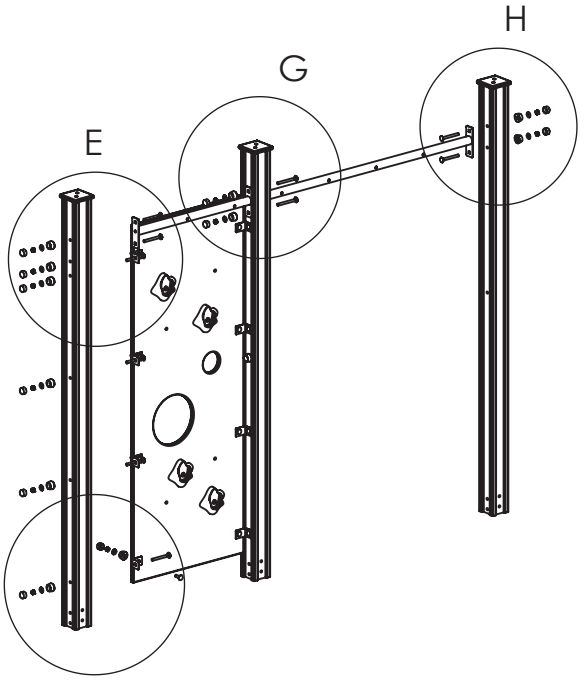

DETAIL H
SCALE 1 : 15

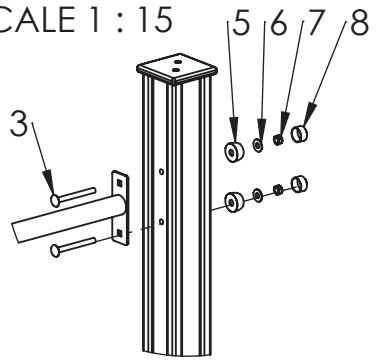

DETAIL G
SCALE 1 : 15

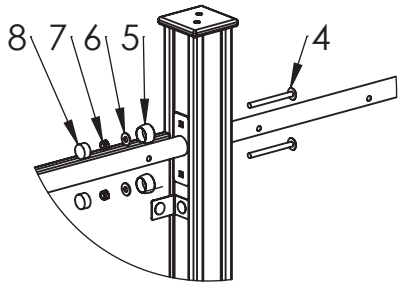

DETAIL E
SCALE 1 : 15

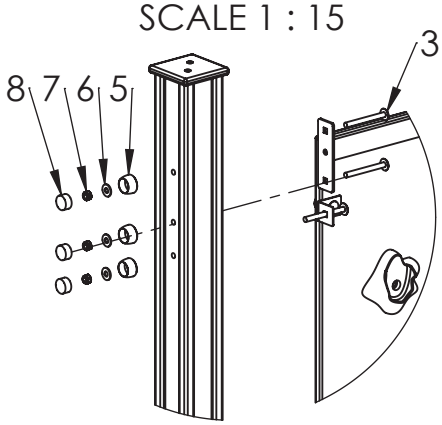

DETAIL F
SCALE 1 : 15

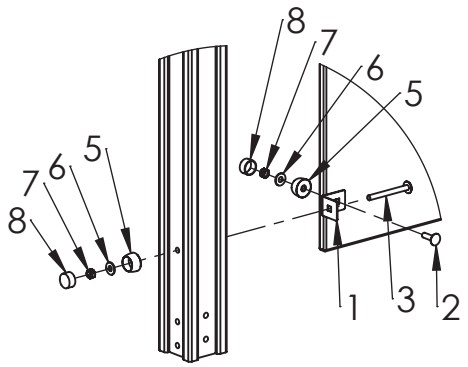

ITEM NO.	PART NUMBER
1	corner 48x60
2	bolt M10x35 DIN603
3	bolt M10x100 DIN603
4	bolt M10x110 DIN603
5	nut cover M12
6	washer M10 DIN9054
7	nut M10 DIN985
8	nut cover cap M12

UNLESS OTHERWISE SPECIFIED:
DIMENSIONS ARE IN MILLIMETERS
WEIGHT ARE IN KILOGRAMM

	NAME	SIGNATURE	DATE	REVISION
DRAWN	M.Rebase		03.10.2023	
APPV'D				

PART NUMBER / DWG NO.:
RS125L

DESCRIPTION:
Climbing Frame GIBBON L

READYMADE
Verklighet för drömmar

MATERIAL:

A4

WEIGHT:

SCALE: 1:50

SHEET 16 OF 26

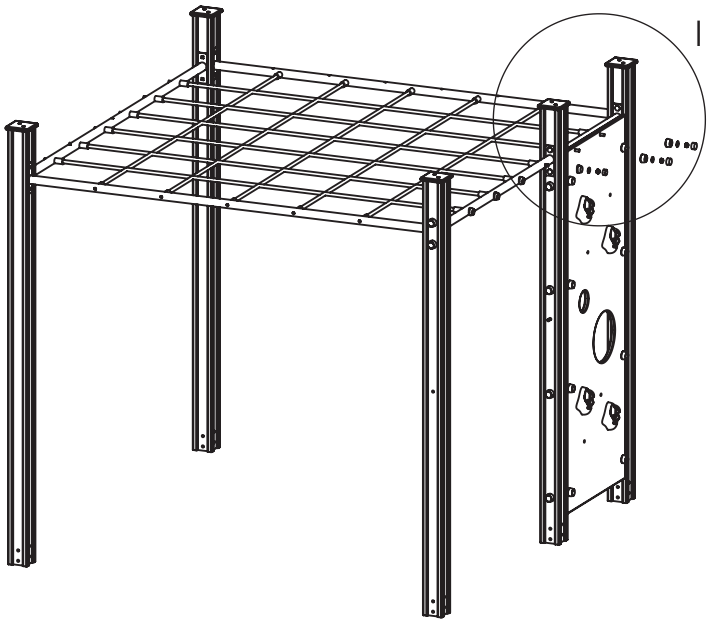

DETAIL I
SCALE 1 : 10

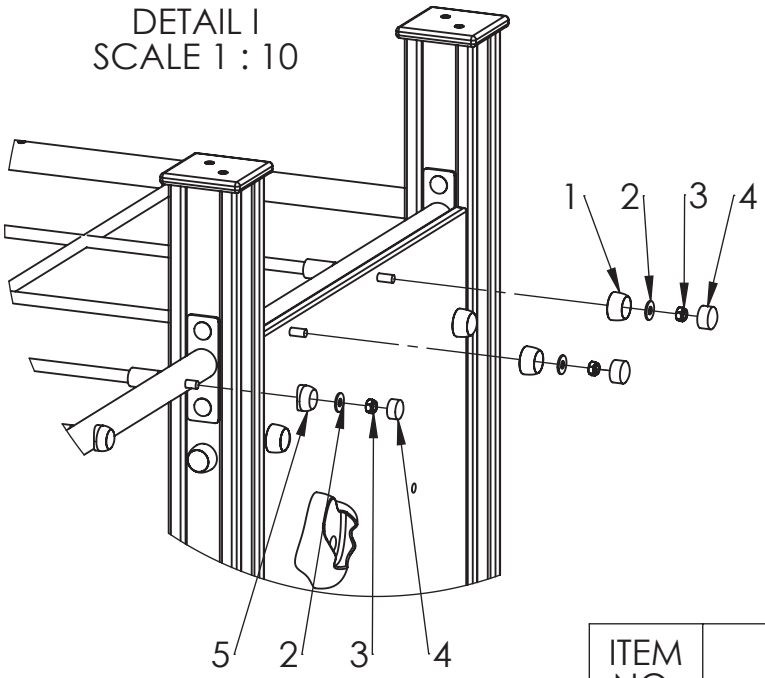

ITEM NO.	PART NUMBER
1	nut cover M12
2	washer M10 DIN9054
3	nut M10 DIN985
4	nut cover cap M12
5	nut cover M12 for beam

UNLESS OTHERWISE SPECIFIED:
DIMENSIONS ARE IN MILLIMETERS
WEIGHT ARE IN KILOGRAMM

	NAME	SIGNATURE	DATE	REVISION
DRAWN	M.Rebase		03.10.2023	
APPV'D				

PART NUMBER / DWG NO.: RS125L

DESCRIPTION: Climbing Frame GIBBON L

READYMADE
Verklighet för drömmar

MATERIAL:

A4

WEIGHT:

SCALE: 1:50

SHEET 17 OF 26

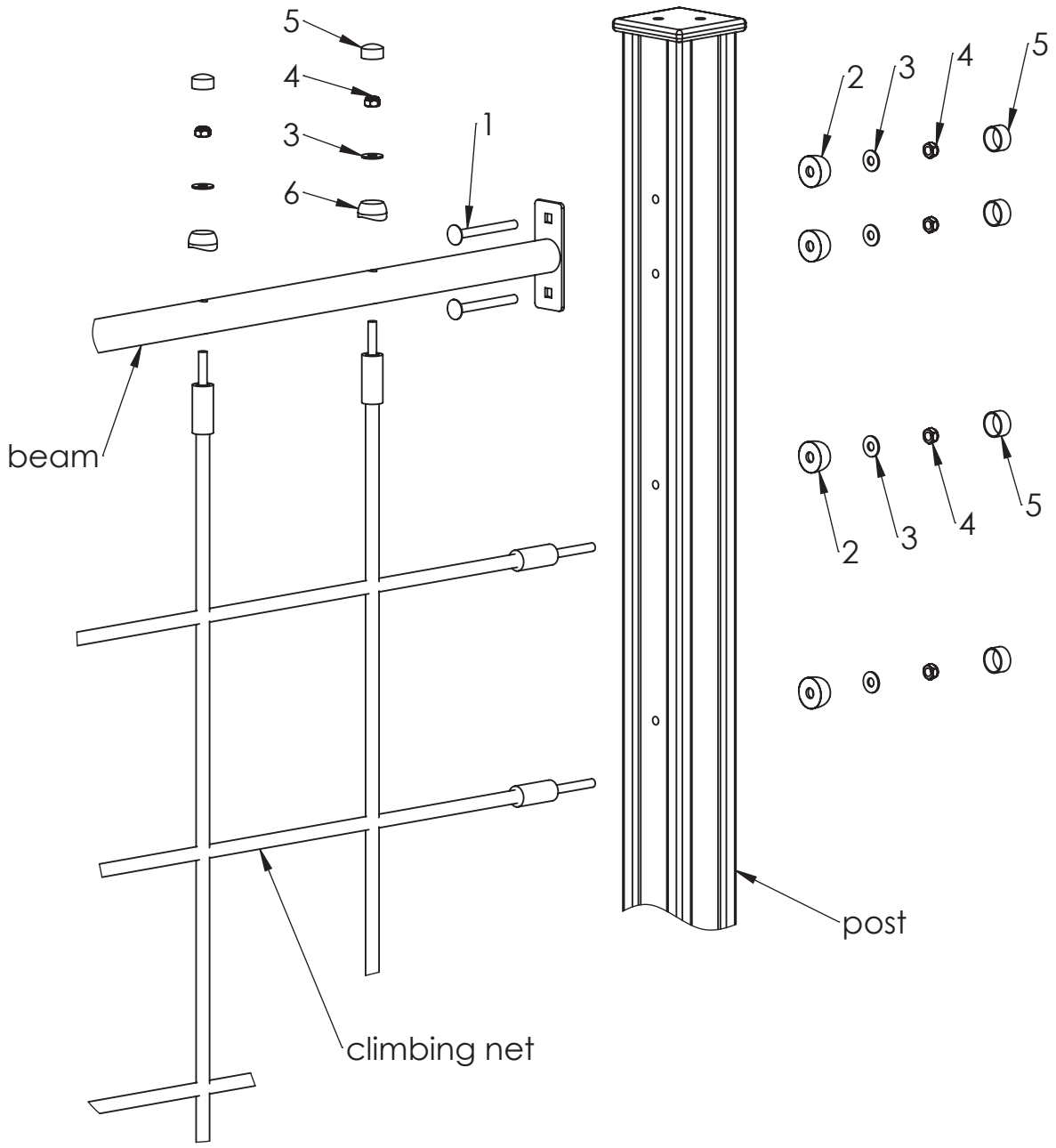

ITEM NO.	PART NUMBER
1	bolt M10x100 DIN603
2	nut cover M12
3	washer M10 DIN9054
4	nut M10 DIN985
5	nut cover cap M12
6	nut cover M12 for beam

UNLESS OTHERWISE SPECIFIED:
DIMENSIONS ARE IN MILLIMETERS
WEIGHT ARE IN KILOGRAMM

	NAME	SIGNATURE	DATE	REVISION
DRAWN	M.Rebase		03.10.2023	
APPV'D				

PART NUMBER / DWG NO.:
RS125L

DESCRIPTION:
Climbing Frame GIBBON L

READYMADE
Verklighet för drömmar

MATERIAL:

A4

WEIGHT:

SCALE: 1:50

SHEET 18 OF 26

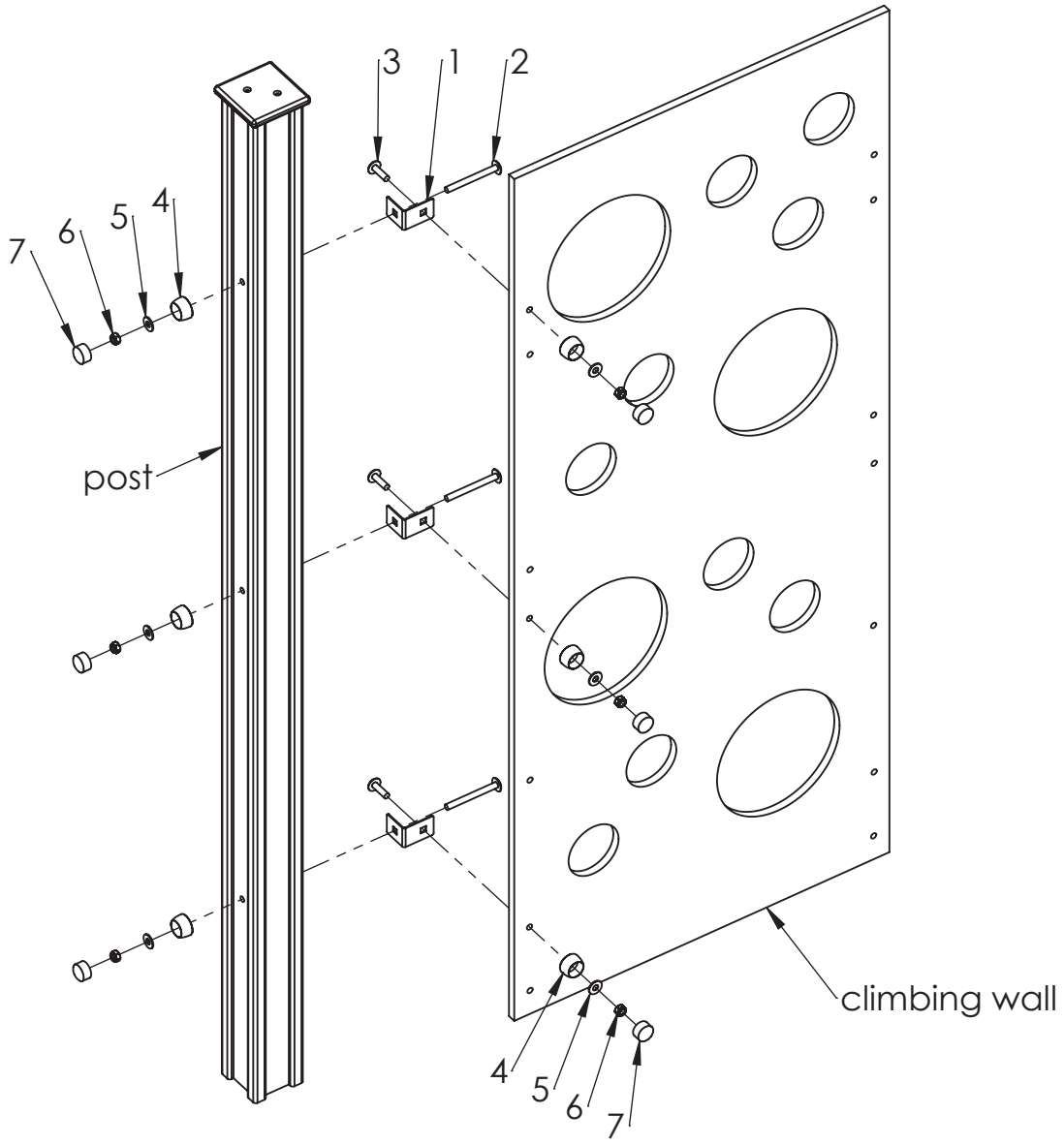

ITEM NO.	PART NUMBER
1	corner 48x60
2	bolt M10x100 DIN603
3	bolt M10x35 DIN603
4	nut cover M12
5	washer M10 DIN9054
6	nut M10 DIN985
7	nut cover cap M12

UNLESS OTHERWISE SPECIFIED:
DIMENSIONS ARE IN MILLIMETERS
WEIGHT ARE IN KILOGRAMM

	NAME	SIGNATURE	DATE	REVISION
DRAWN	M.Rebase		03.10.2023	
APPV'D				

PART NUMBER / DWG NO.:
RS125L

DESCRIPTION:
Climbing Frame GIBBON L

READYMADE
Verklighet för drömmar

MATERIAL:

A4

WEIGHT:

SCALE: 1:50

SHEET 19 OF 26

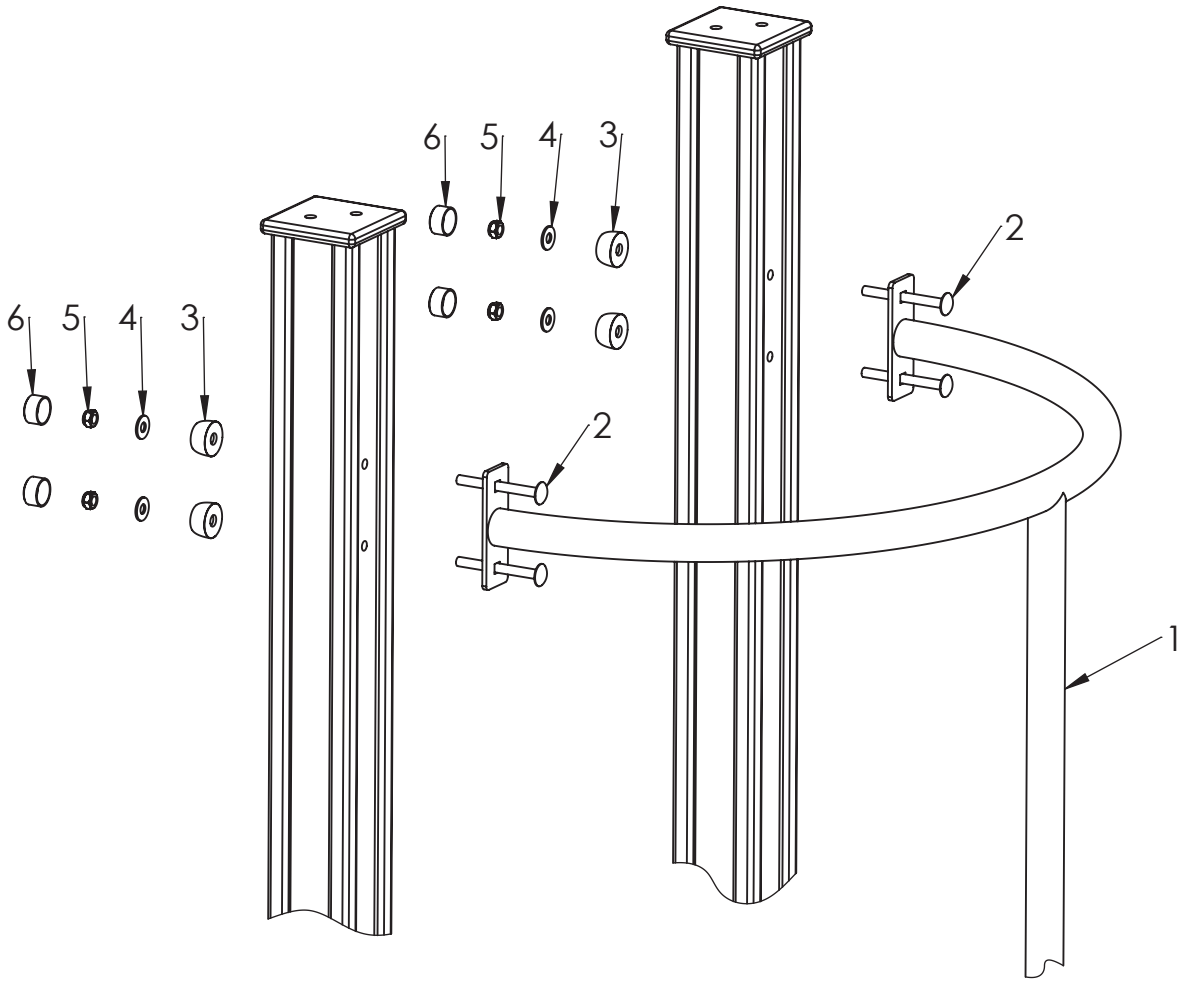

ITEM NO.	PART NUMBER
1	climbing pole
2	bolt M10x100 DIN603
3	nut cover M12
4	washer M10 DIN9054
5	nut M10 DIN985
6	nut cover cap M12

UNLESS OTHERWISE SPECIFIED:
DIMENSIONS ARE IN MILLIMETERS
WEIGHT ARE IN KILOGRAMM

	NAME	SIGNATURE	DATE	REVISION
DRAWN	M.Rebase		03.10.2023	
APPV'D				

PART NUMBER / DWG NO.:
RS125L

DESCRIPTION:
Climbing Frame GIBBON L

READYMADE
Verklighet för drömmar

MATERIAL:

A4

WEIGHT:

SCALE: 1:50

SHEET 20 OF 26

DETAIL A
SCALE 1 : 5

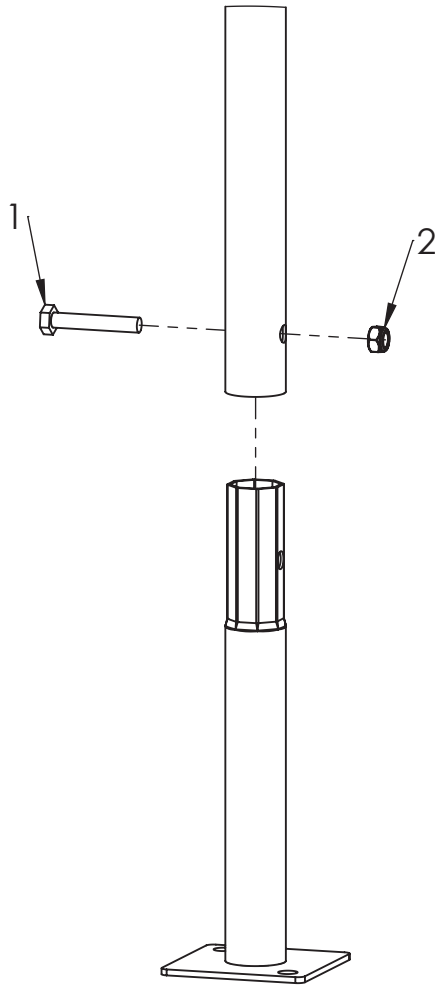

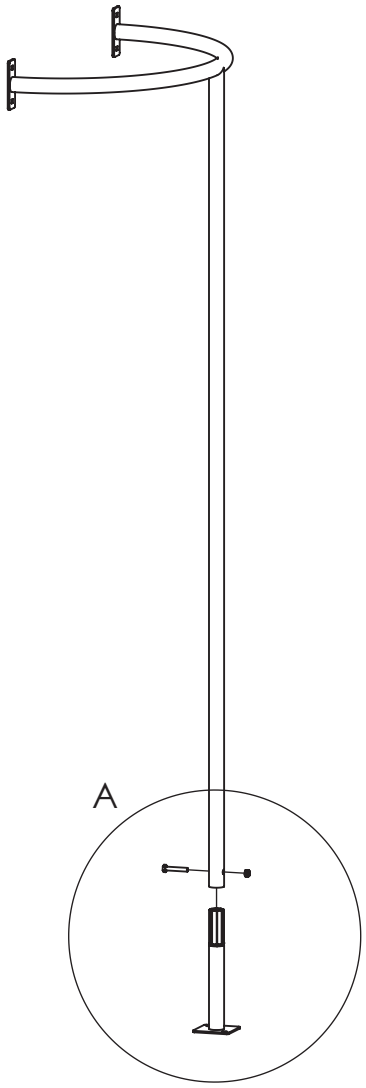

ITEM NO.	PART NUMBER
1	bolt M10x60 DIN931
2	nut M10 DIN985

UNLESS OTHERWISE SPECIFIED:
DIMENSIONS ARE IN MILLIMETERS
WEIGHT ARE IN KILOGRAMM

	NAME	SIGNATURE	DATE	REVISION
DRAWN	M.Rebase		03.10.2023	
APPV'D				

PART NUMBER / DWG NO.:
RS125L

DESCRIPTION:
Climbing Frame GIBBON L

READYMADE
Verklighet för drömmar

MATERIAL:

A4

WEIGHT:

SCALE: 1:50

SHEET 21 OF 26

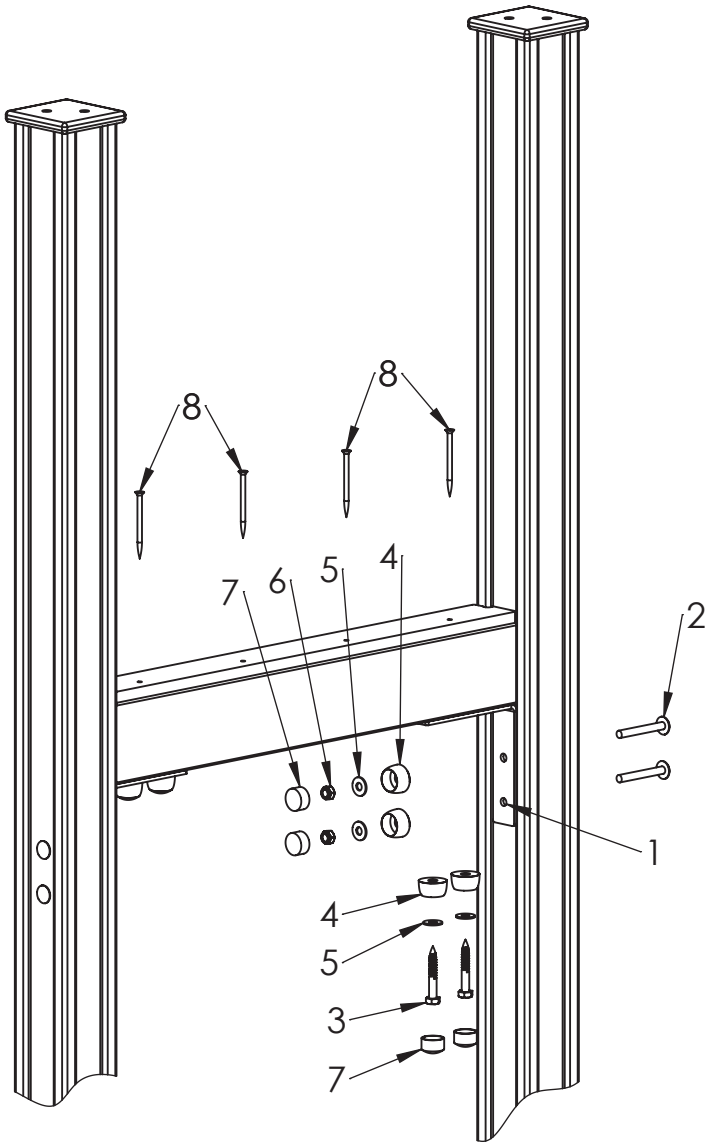

ITEM NO.	PART NUMBER
1	corner 165x165x45
2	bolt DIN603 M10x80
3	wood screw DIN571 10x70
4	nut cover M12
5	washer M10 DIN9054
6	nut M10 DIN985
7	nut cover cap M12
8	wood screw 6 x 90

UNLESS OTHERWISE SPECIFIED:
DIMENSIONS ARE IN MILLIMETERS
WEIGHT ARE IN KILOGRAMM

	NAME	SIGNATURE	DATE	REVISION
DRAWN	M.Rebase		03.10.2023	
APPV'D				

PART NUMBER / DWG NO.:
RS125L

DESCRIPTION:
Climbing Frame GIBBON L

READYMADE
Verklighet för drömmar

MATERIAL:

A4

WEIGHT:

SCALE: 1:50

SHEET 22 OF 26

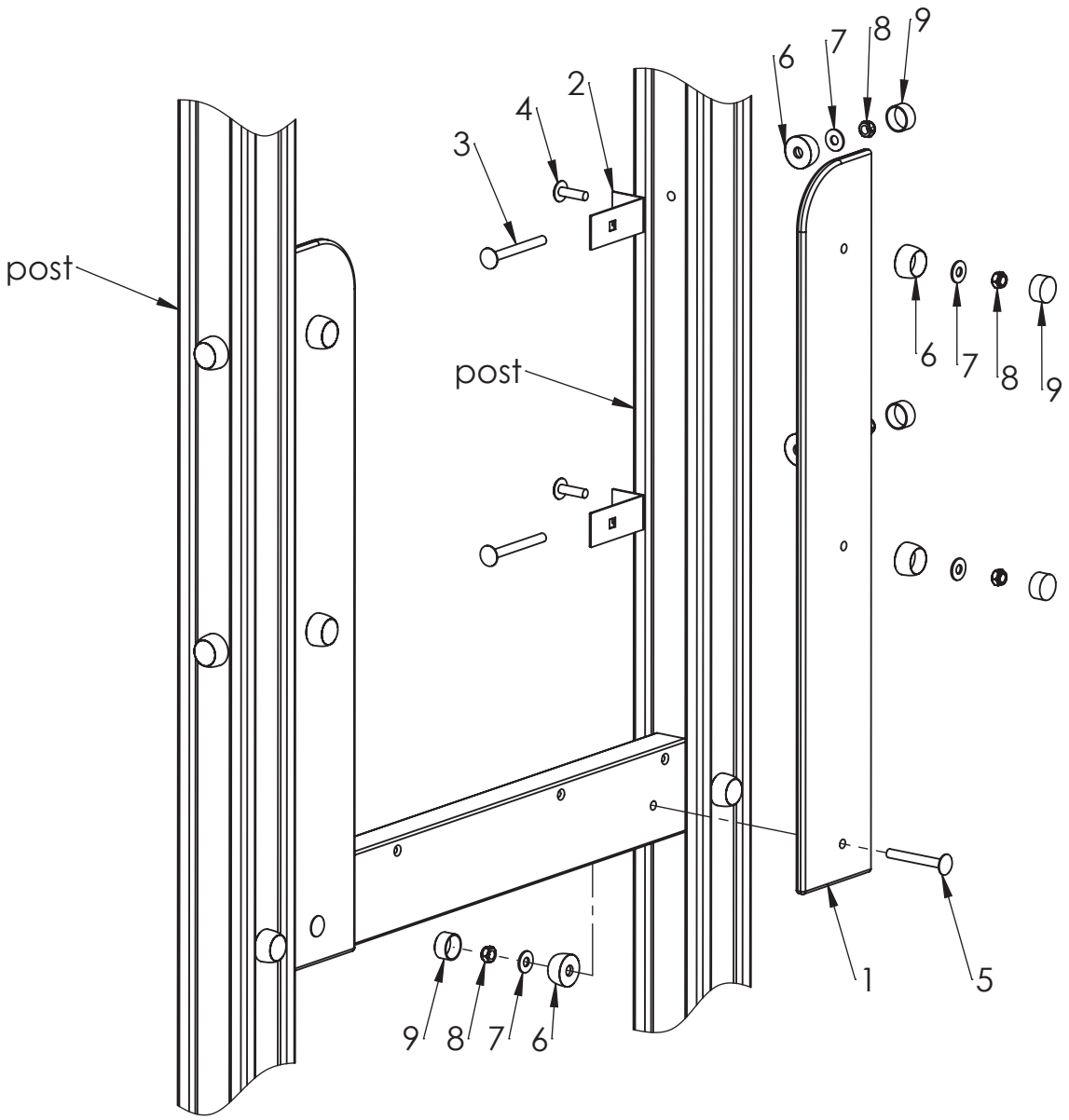

ITEM NO.	PART NUMBER
1	panel 850x126
2	slide side panel fixing 40x100
3	bolt M10x100 DIN603
4	bolt M10x35 DIN603
5	bolt M10x80 DIN603
6	nut cover M12
7	washer M10 DIN9054
8	nut M10 DIN985
9	nut cover cap M12

UNLESS OTHERWISE SPECIFIED:
DIMENSIONS ARE IN MILLIMETERS
WEIGHT ARE IN KILOGRAMM

	NAME	SIGNATURE	DATE	REVISION
DRAWN	M.Rebase		03.10.2023	
APPV'D				

PART NUMBER / DWG NO.:
RS125L

DESCRIPTION:
Climbing Frame GIBBON L

READYMADE
Verklighet för drömmar

MATERIAL:

A4

WEIGHT:

SCALE: 1:50

SHEET 23 OF 26

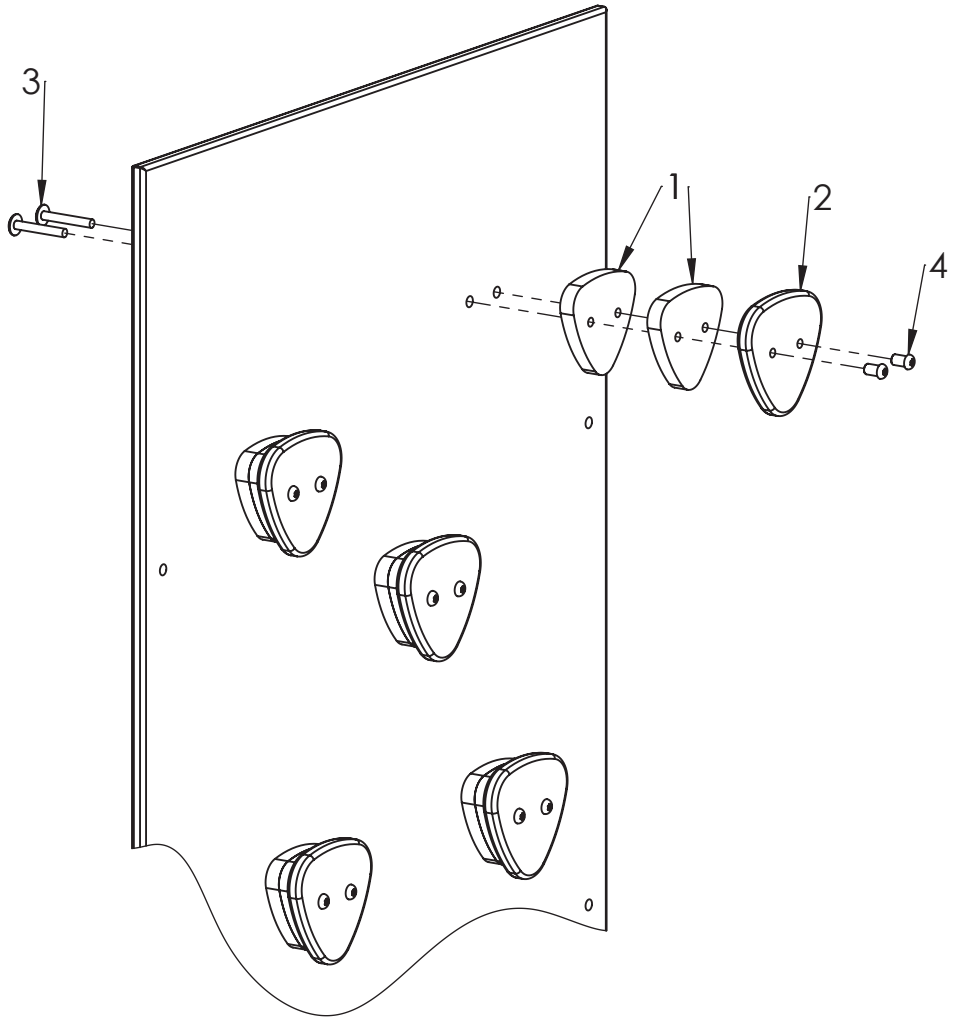

ITEM NO.	PART NUMBER
1	climbing grip base
2	climbing grip
3	bolt M8x55 DIN603
4	metal screw M8x16 DIN7380

UNLESS OTHERWISE SPECIFIED:
DIMENSIONS ARE IN MILLIMETERS
WEIGHT ARE IN KILOGRAMM

	NAME	SIGNATURE	DATE	REVISION
DRAWN	M.Rebase		03.10.2023	
APPV'D				

PART NUMBER / DWG NO.: RS125L

DESCRIPTION: Climbing Frame GIBBON L

READYMADE
Verklighet för drömmar

MATERIAL:

A4

WEIGHT:

SCALE: 1:50

SHEET 24 OF 26

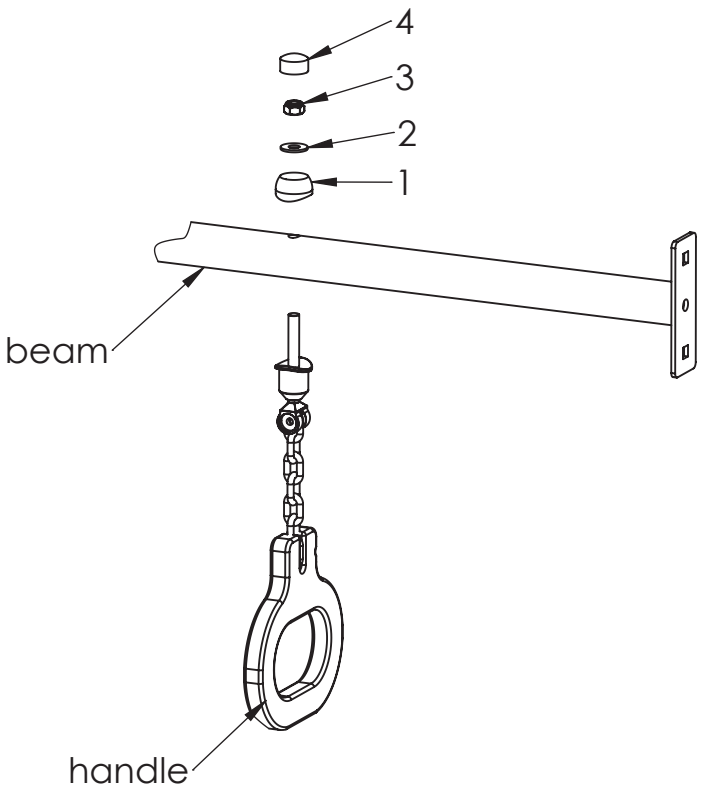

ITEM NO.	PART NUMBER
1	nut cover M12 for beam
2	washer M10 DIN9054
3	nut M10 DIN985
4	nut cover cap M12

UNLESS OTHERWISE SPECIFIED:
DIMENSIONS ARE IN MILLIMETERS
WEIGHT ARE IN KILOGRAMM

	NAME	SIGNATURE	DATE	REVISION
DRAWN	M.Rebase		03.10.2023	
APPV'D				

PART NUMBER / DWG NO.: RS125L

DESCRIPTION: Climbing Frame GIBBON L

READYMADE
Verklighet för drömmar

MATERIAL:

A4

WEIGHT:

SCALE: 1:50

SHEET 25 OF 26

Use of thread adhesive

Thread adhesive is nessesery to use in places where nut or bolt without lock is used.

For instance:

1) Bridges (with 3 or 8 steps)
2) OCTO series (Pin Trx nut)
3) All PP covered steel wire connections

Use of thread adhesive: add small drop of thread adhesive to the end of the bolt or nut thread.

UNLESS OTHERWISE SPECIFIED: DIMENSIONS ARE IN MILLIMETERS WEIGHT ARE IN KILOGRAMM					PART NUMBER / DWG NO.: RS125L
	NAME	SIGNATURE	DATE	REVISION	
DRAWN	M.Rebase		03.10.2023		DESCRIPTION: Climbing Frame GIBBON L
APPV'D					

READYMADE

Verklighet för drömmar

MATERIAL:		A4
WEIGHT:	SCALE: 1:50	SHEET 26 OF 26

attaching chain to concrete

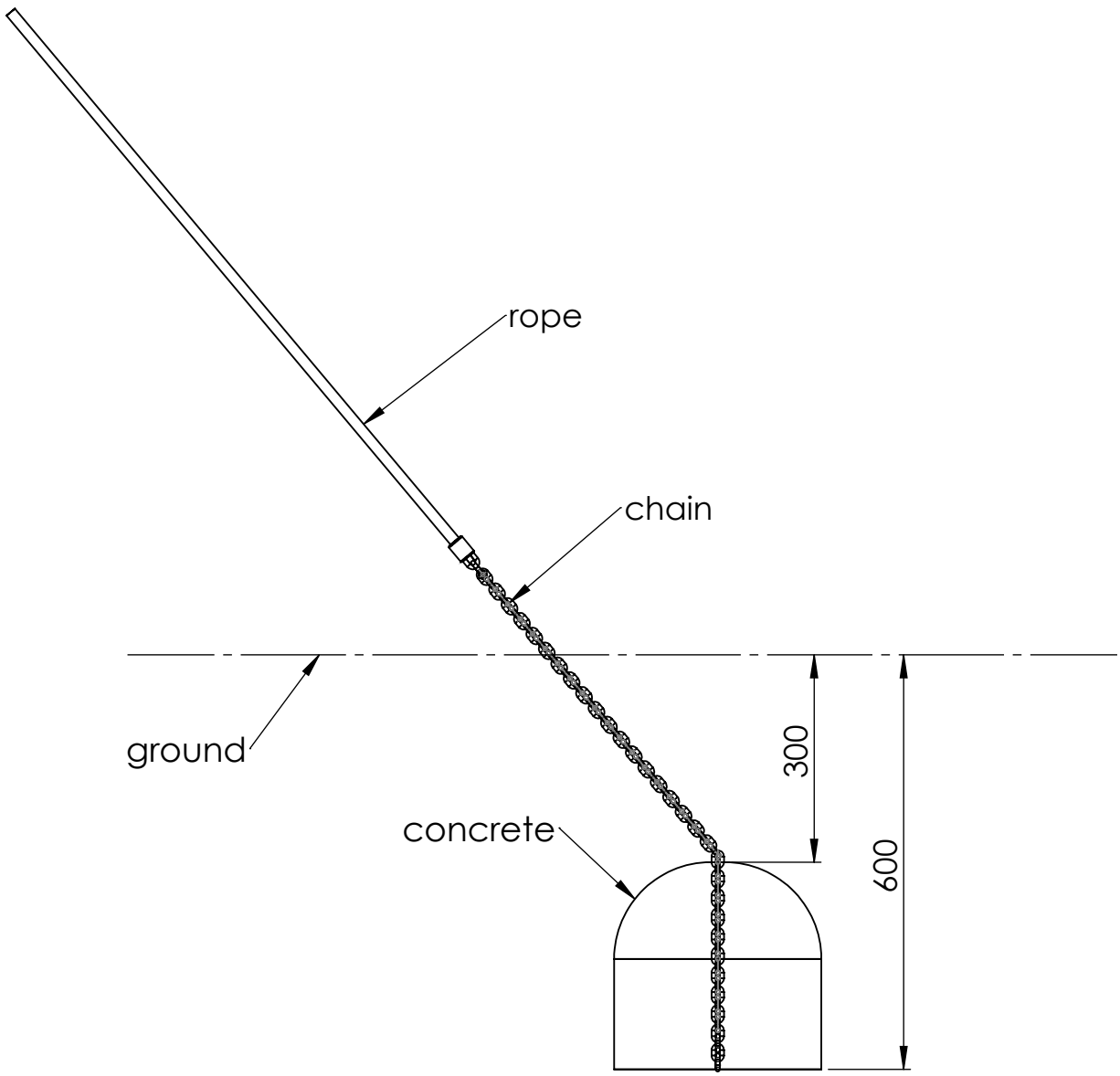

UNLESS OTHERWISE SPECIFIED: DIMENSIONS ARE IN MILLIMETERS WEIGHT ARE IN KILOGRAMM					PART NUMBER / DWG NO.: RS125L
	NAME	SIGNATURE	DATE	REVISION	
DRAWN	M.Rebase		03.10.2023		DESCRIPTION: Climbing Frame GIBBON L
APPV'D					

READYMADE

Verklighet för drömmar

MATERIAL:		A4
WEIGHT:	SCALE: 1:50	

chain tensioning option

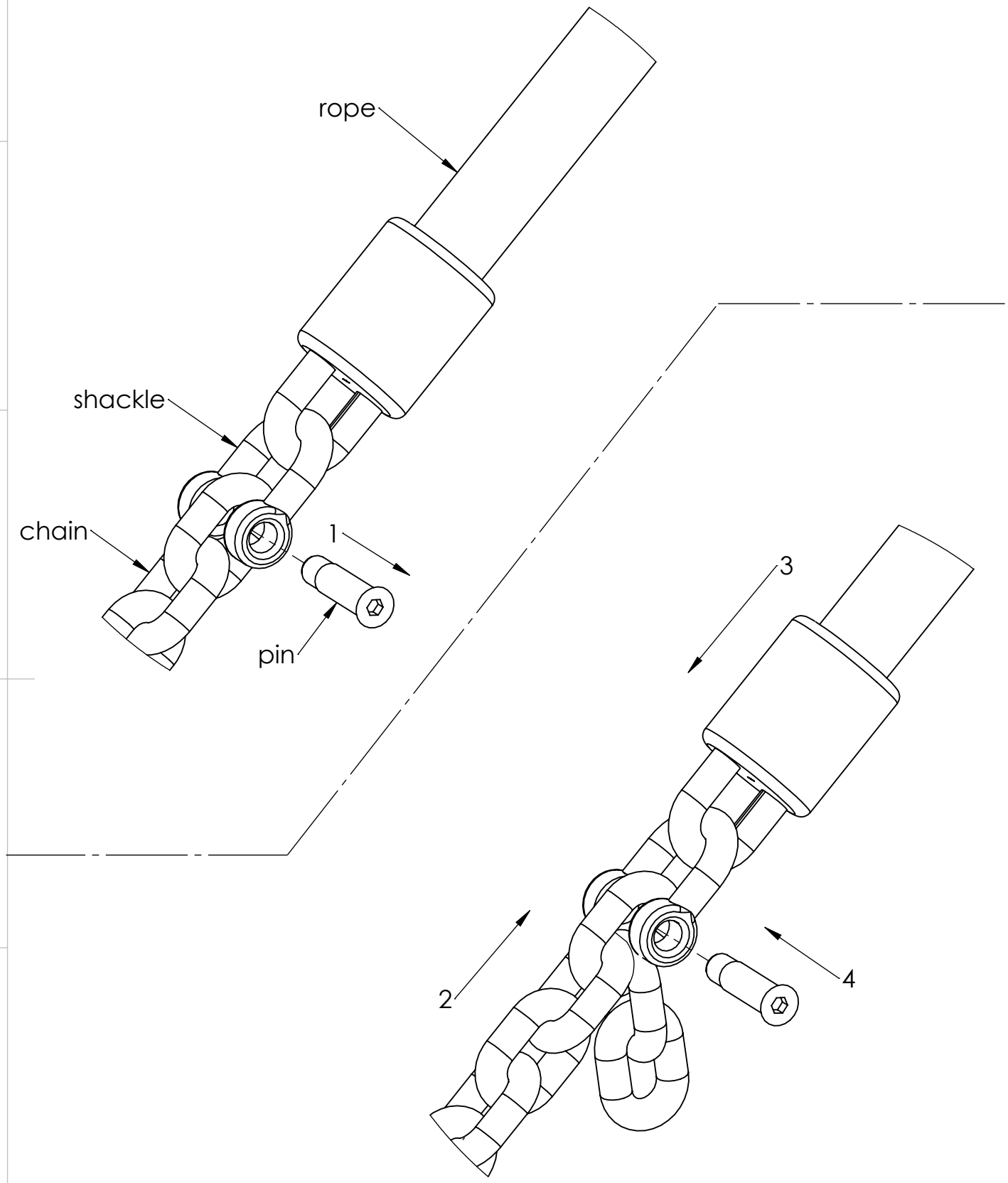

UNLESS OTHERWISE SPECIFIED: DIMENSIONS ARE IN MILLIMETERS WEIGHT ARE IN KILOGRAMM					PART NUMBER / DWG NO.: RS125L
	NAME	SIGNATURE	DATE	REVISION	
DRAWN	M.Rebase		03.10.2023		DESCRIPTION: Climbing Frame GIBBON L
APPV'D					

READYMADE

Verklighet för drömmar

MATERIAL:		A4
WEIGHT:	SCALE: 1:50	