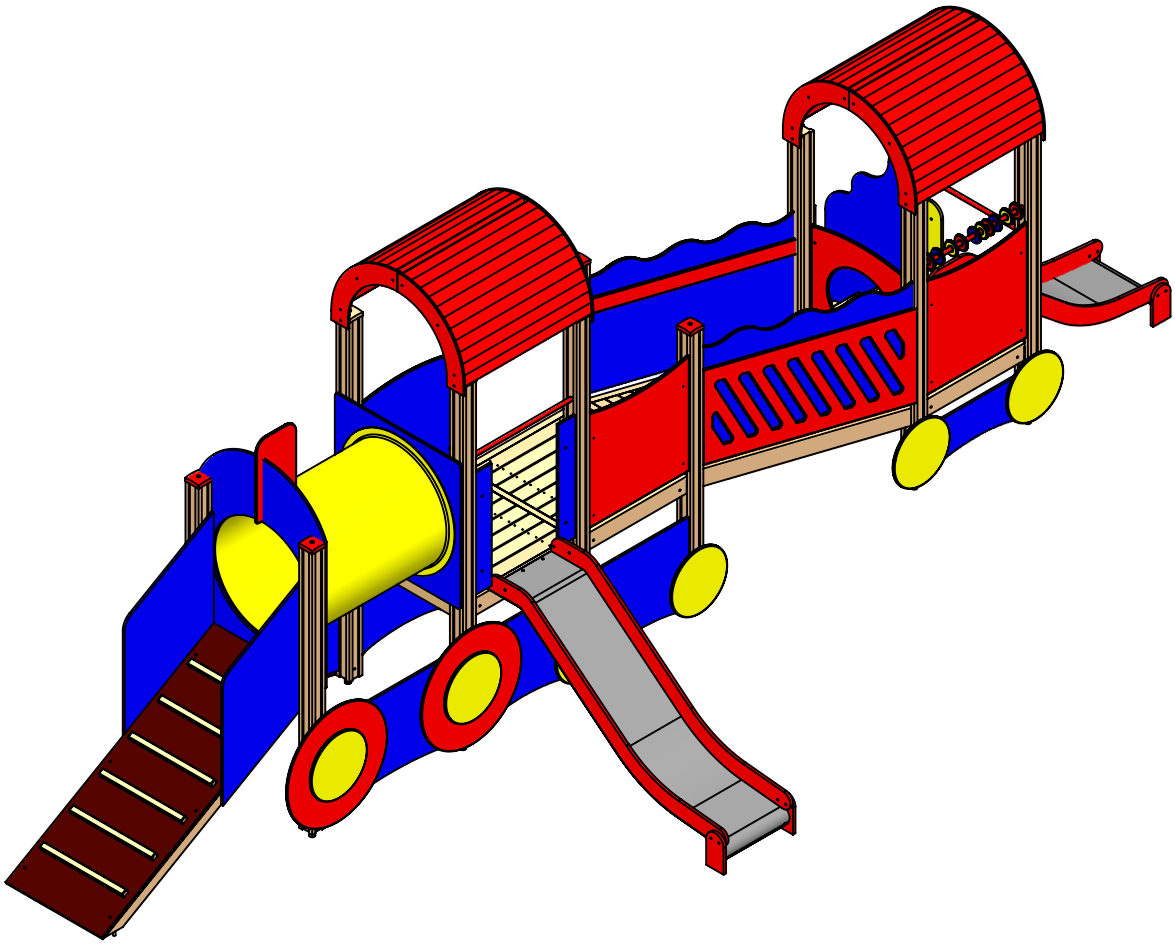

UNLESS OTHERWISE SPECIFIED:
DIMENSIONS ARE IN MILLIMETERS
WEIGHT ARE IN KILOGRAMM

	NAME	SIGNATURE	DATE	REVISION
DRAWN	M.Rebase		15.08.2012	
APPV'D				

PART NUMBER / DWG NO.:
MM103

DESCRIPTION:
Playtrain GALAXY EXPRESS

READYMADE
Verklighet för drömmar

MATERIAL:
wood, metal, plastic

A4

WEIGHT:

SCALE: 1:40

SHEET 1 OF 7

safety area

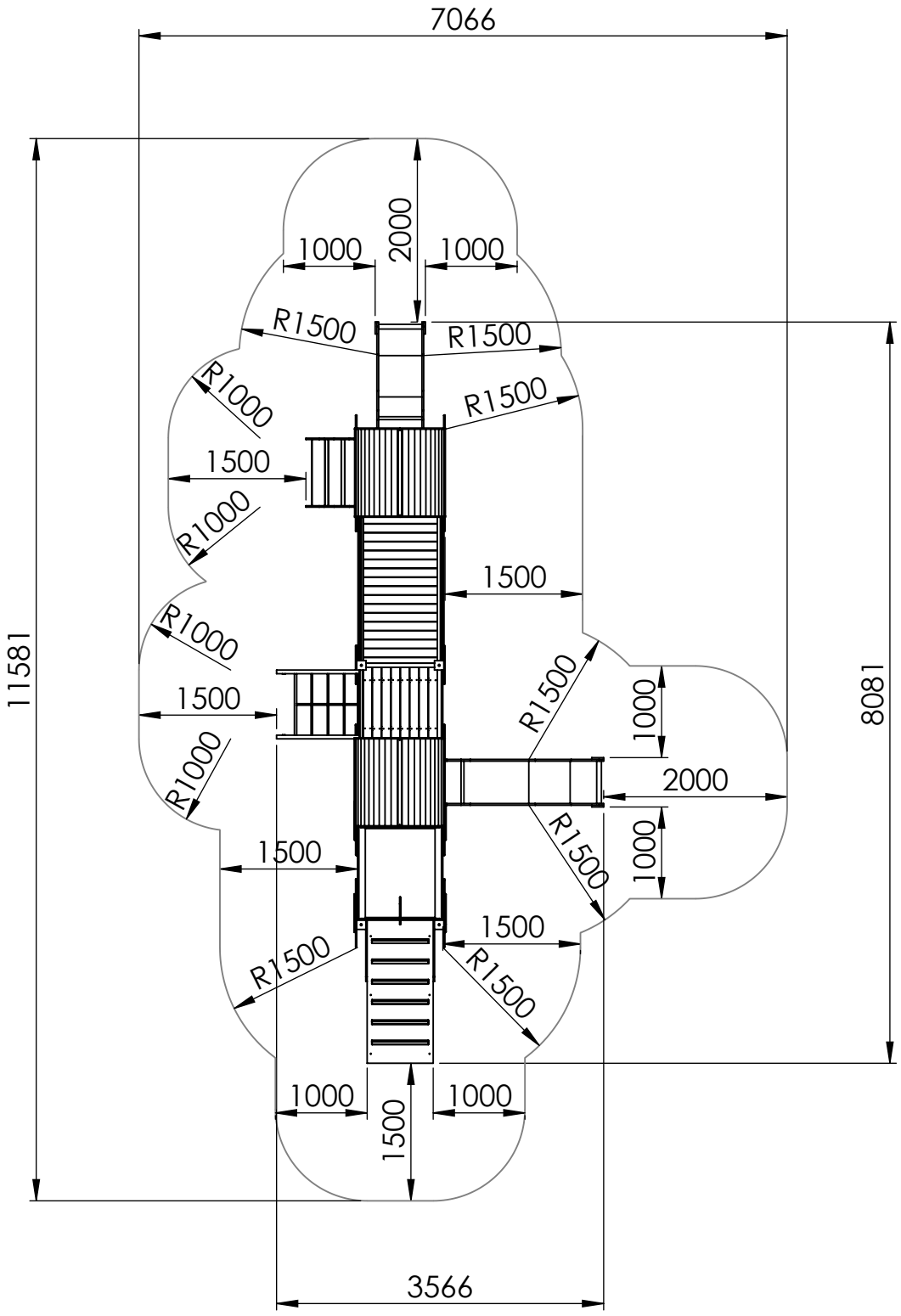

UNLESS OTHERWISE SPECIFIED: DIMENSIONS ARE IN MILLIMETERS WEIGHT ARE IN KILOGRAMM				
	NAME	SIGNATURE	DATE	REVISION
DRAWN	M.Rebase		15.08.2012	
APPV'D				

PART NUMBER / DWG NO.:
MM103

DESCRIPTION:
Playtrain GALAXY EXPRESS

READYMADE
Verklighet för drömmar

MATERIAL:		
wood, metal, plastic		A4
WEIGHT:	SCALE: 1:70	SHEET 2 OF 7

foundation

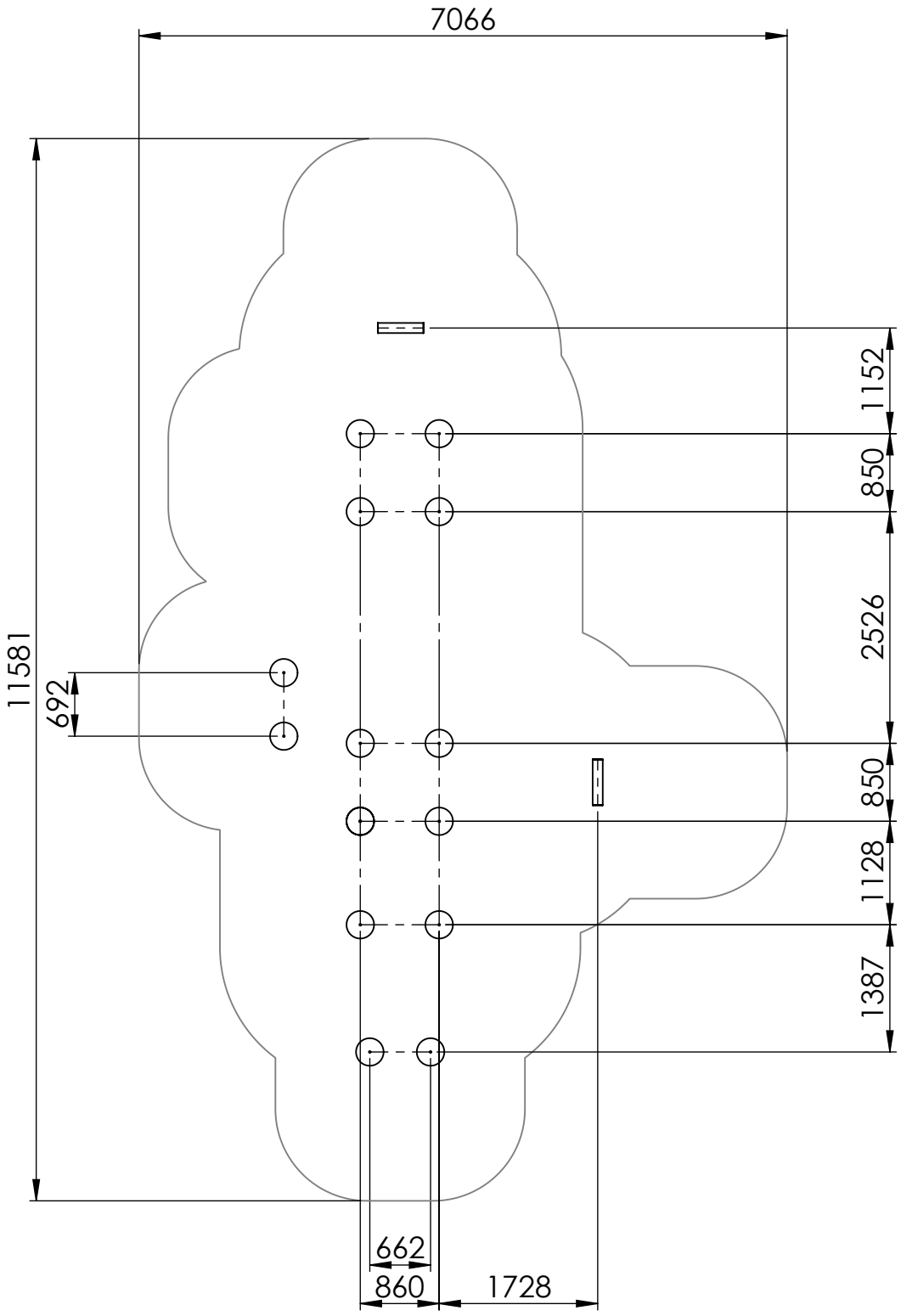

UNLESS OTHERWISE SPECIFIED: DIMENSIONS ARE IN MILLIMETERS WEIGHT ARE IN KILOGRAMM				
	NAME	SIGNATURE	DATE	REVISION
DRAWN	M.Rebase		15.08.2012	
APPV'D				

PART NUMBER / DWG NO.:
MM103

DESCRIPTION:
Playtrain GALAXY EXPRESS

READYMADE
Verklighet för drömmar

MATERIAL: wood, metal, plastic		A4
WEIGHT:	SCALE: 1:70	SHEET 3 OF 7

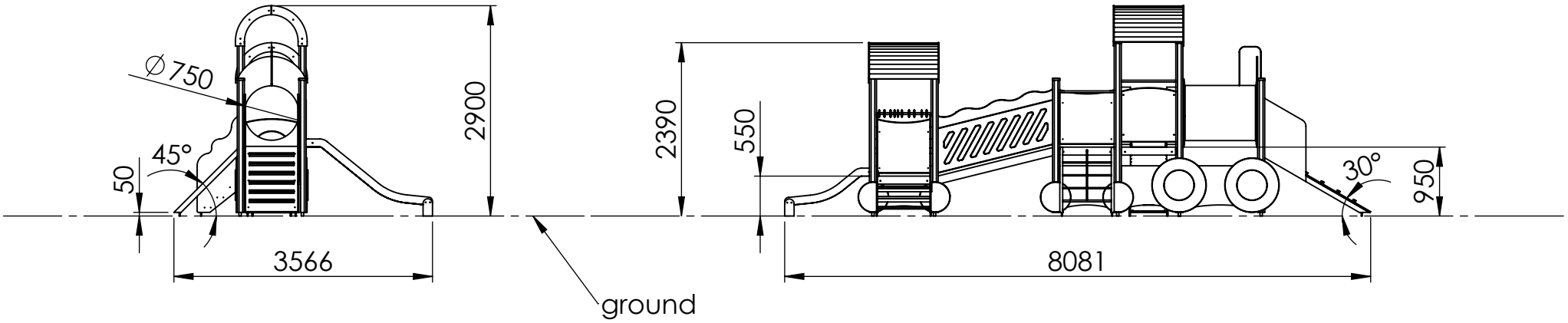

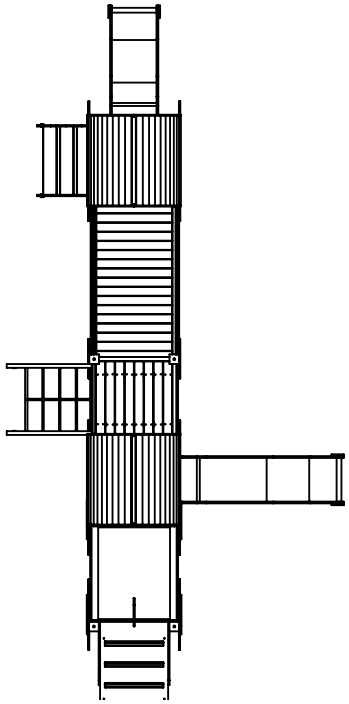

READYMADE

Verklighet för drömmar

UNLESS OTHERWISE SPECIFIED: DIMENSIONS ARE IN MILLIMETERS WEIGHT ARE IN KILOGRAMM				
	NAME	SIGNATURE	DATE	REVISION
DRAWN	M.Rebase		15.08.2012	
APPV'D				

)Ü Tiptiptap OÜ
Veetorni 9,
Jüri alevik, Rae vald,
75301 Harjumaa

PART NUMBER / DWG NO.: MM103

DESCRIPTION: Playtrain GALAXY EXPRESS

MATERIAL: wood, metal, plastic

A4

WEIGHT:

SCALE: 1:80

SHEET 4 OF 7

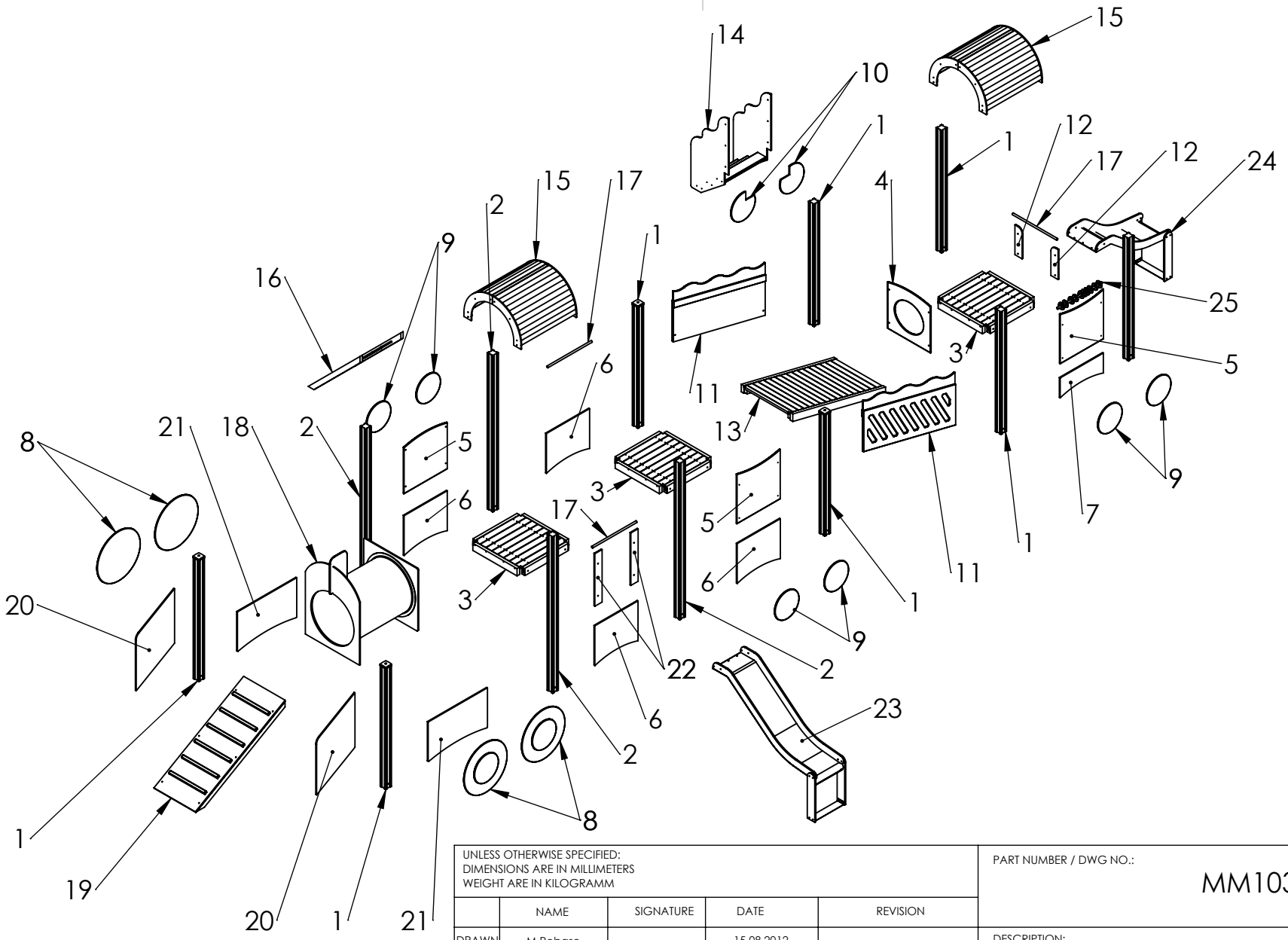

UNLESS OTHERWISE SPECIFIED: DIMENSIONS ARE IN MILLIMETERS WEIGHT ARE IN KILOGRAMM				
	NAME	SIGNATURE	DATE	REVISION
DRAWN	M.Rebase		15.08.2012	
APPV'D				

PART NUMBER / DWG NO.: MM103

DESCRIPTION: Playtrain GALAXY EXPRESS

MATERIAL: wood, metal, plastic

A4

WEIGHT:

SCALE: 1:70

SHEET 5 OF 7

READYMADE

Verklighet för drömmar

Tiptiptap OÜ
Veetorni 9,
Jüri alevik, Rae vald,
75301 Harjumaa

ITEM NO.	PART NUMBER	DESCRIPTION	QTY.
1	post 98x98x1840	laminated wood	8
2	post 98x98x2350	laminated wood	4
3	Platform	laminated wood	3
4	panel 750x750 with hole	plywood	1
5	panel 750x750	plywood	3
6	panel 750x600	plywood	4
7	panel 750x300	plywood	1
8	wheel d_750	plywood	4
9	wheel d_420	plywood	10
10	wheel d_420 with cut in	plywood	2
11	brigde panel 750x1594	plywood	2
12	panel 125x450	plywood	2
13	brigde L-1594	laminated wood	1
14	stairs	laminated wood	1
15	roof	plywood, PE plastic	2
16	inclined climbing net h.950	wood, PP covered steel wire	1
17	guardrail d.25x770	painted galvanized steel	3
18	tube d_760x1000 with panels	PE plastic	1
19	ramp h_950	wood, plywood	1
20	side panel 770x820	plywood	2
21	panel 1030x600	plywood	2
22	panel 125x790	plywood	2
23	slide h_950	PE plastic, stainless steel	1
24	slide h_550	PE plastic, stainless steel	1
25	counting rings	PE plastic, painted steel	1

UNLESS OTHERWISE SPECIFIED:
DIMENSIONS ARE IN MILLIMETERS
WEIGHT ARE IN KILOGRAMM

	NAME	SIGNATURE	DATE	REVISION
DRAWN	M.Rebase		15.08.2012	
APP'V'D				

PART NUMBER / DWG NO.:
MM103

DESCRIPTION:
Playtrain GALAXY EXPRESS

READYMADE
Verklighet för drömmar

MATERIAL: wood, metal, plastic | A4

WEIGHT: | SCALE: 1:70 | SHEET 6 OF 7

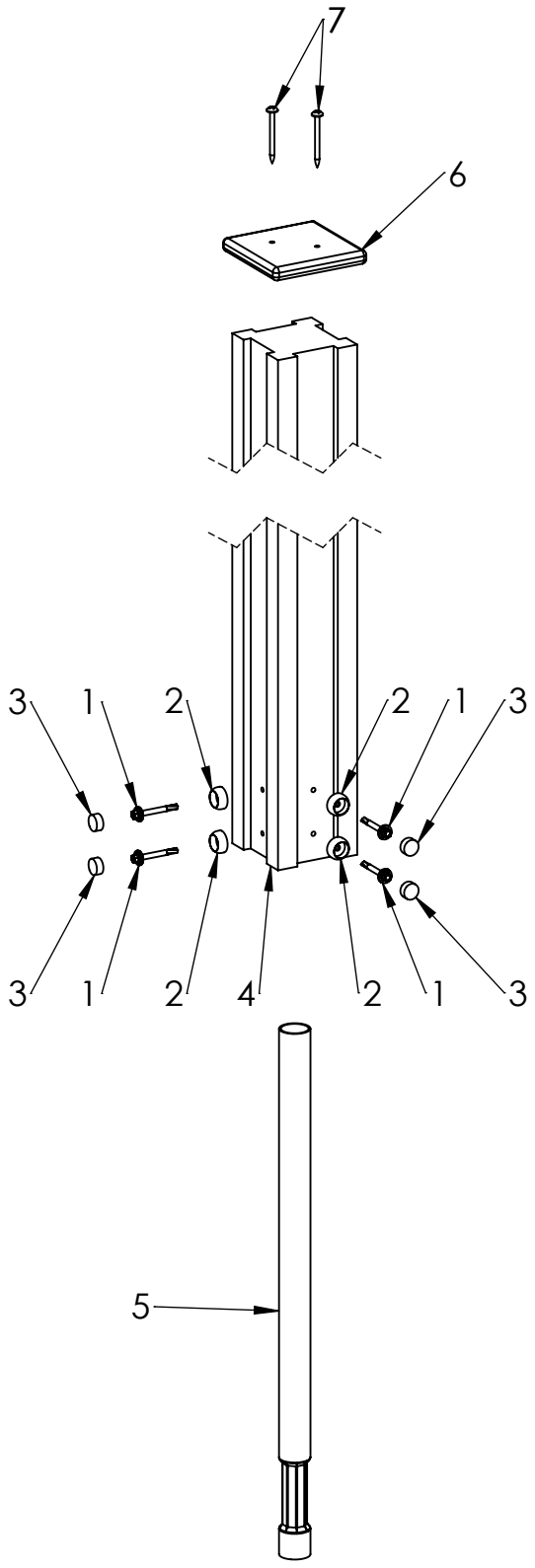

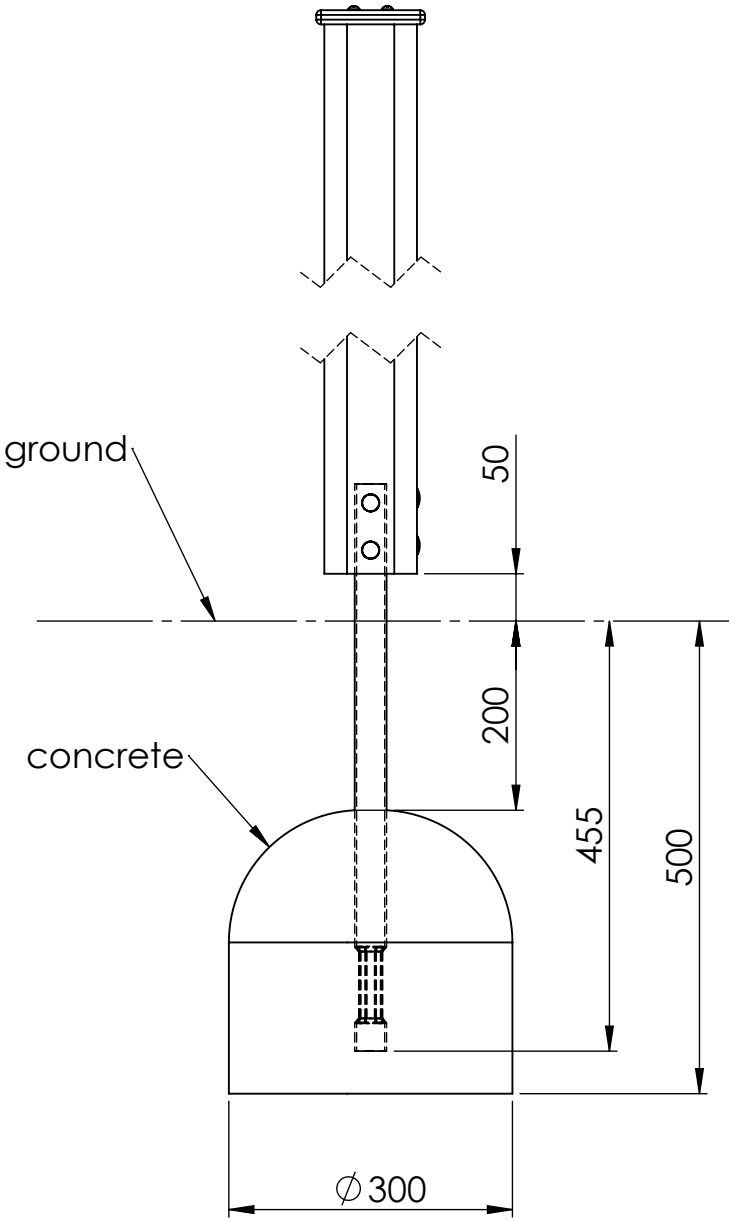

ITEM NO.	PART NUMBER
1	screw DIN7504K 5,5x50
2	nut cover M6
3	nut cover cap M6
4	post 98x98
5	metal ground fixing L_600
6	plastic cap 115x115
7	screw DIN7996 6x60

UNLESS OTHERWISE SPECIFIED:
DIMENSIONS ARE IN MILLIMETERS
WEIGHT ARE IN KILOGRAMM

	NAME	SIGNATURE	DATE	REVISION
DRAWN	M.Rebase		15.08.2012	
APPV'D				

PART NUMBER / DWG NO.:
MM103

DESCRIPTION:
Playtrain GALAXY EXPRESS
connecting metal ground fixing to post

READYMADE
Verklighet för drömmar

MATERIAL: wood, metal, plastic | A4

WEIGHT: | SCALE: 1:8 | SHEET 7 OF 7