Vortex Pergola™ 3300 Model

VXPTS3300140224

Vortex™ Pergolas

Vortex Pergola™ 3300 Model

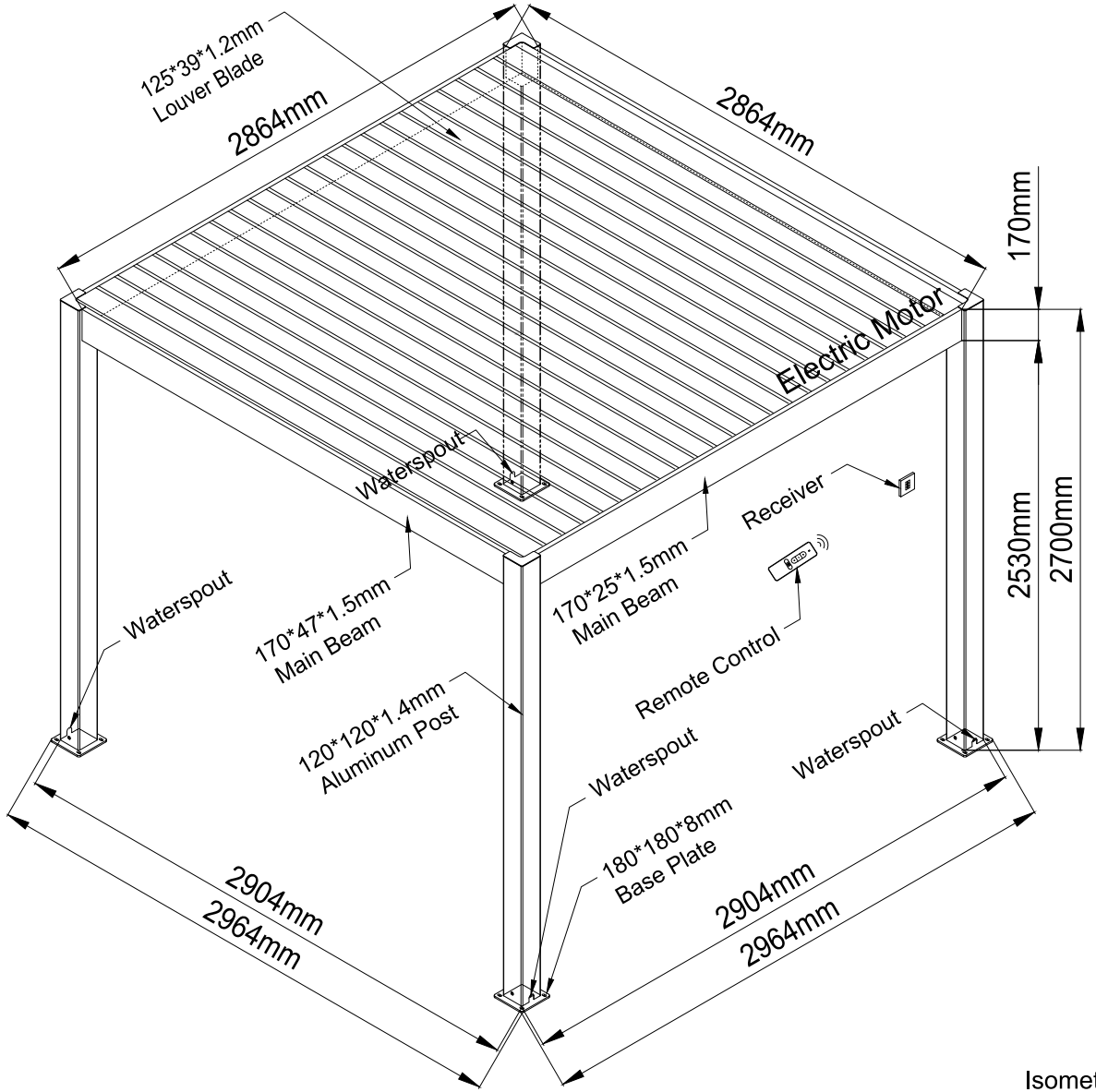

Isometric View

Title: 3300
Louvre Operation: Motor x 1
Control Method: Remote and Post Mount
Colour: Traffic White RAL 9016 Anthracite Grey RAL 7016
Lighting: LED Strip
Power Requirements: 10 Amp circuit
Material: Powder Coated Aluminium
Recommended Foundation: Concrete* * Check with your local council

This pergola is intended as a semi-permanent structure - Please contact your local council for semi-permanent structure approval requirements.

Vortex Pergola™ 3300 Model

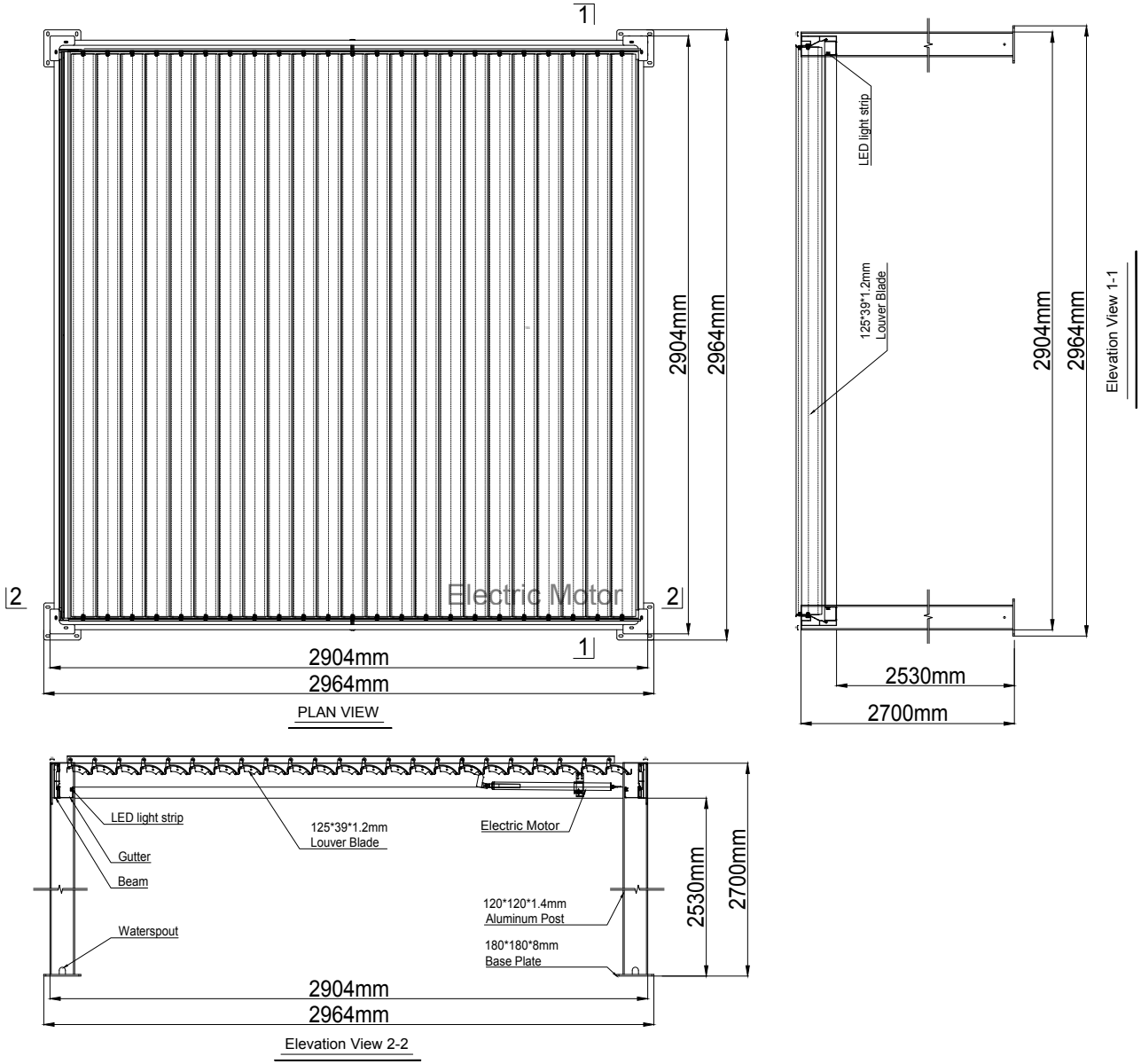

Title: 3300
Louvre Operation: Motor x 1
Control Method: Remote and Post Mount
Colour: Traffic White RAL 9016 Anthracite Grey RAL 7016
Lighting: LED Strip
Power Requirements: 10 Amp circuit
Material: Powder Coated Aluminium
Recommended Foundation: Concrete* * Check with your local council

This pergola is intended as a semi-permanent structure - Please contact your local council for semi-permanent structure approval requirements.

Vortex Pergola™ 3300 Model

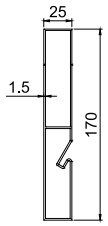

Beam1

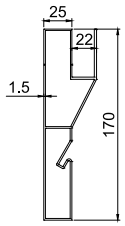

Beam2

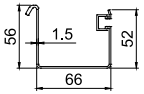

Gutter

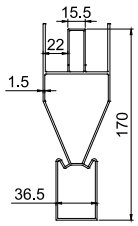

Middle Beam

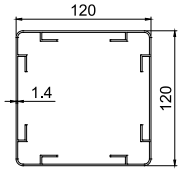

Post

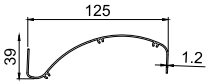

Louver Blade

Control Rod

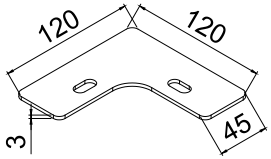

Post Top Cover

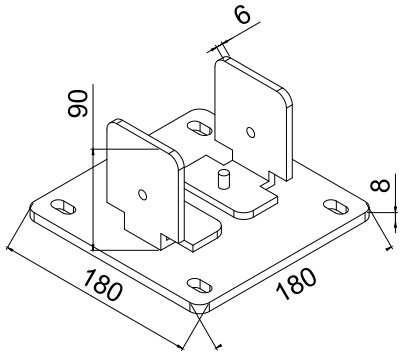

Base Plate

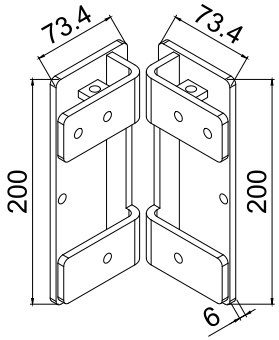

Post + Beam Connector

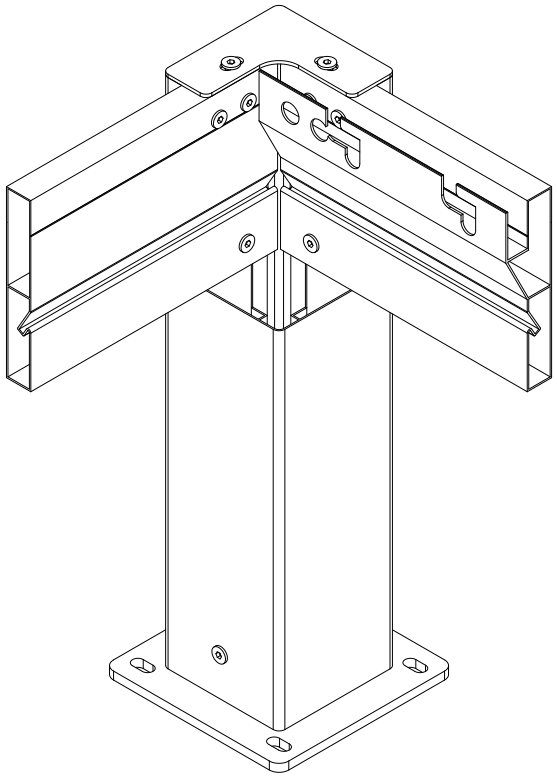

Vortex Pergola™ 3300 Model

Packaging Info. (Pergolas manufactured after Nov 2023)

Crated - All cartons are delivered in one crate.

Crate Dimensions (mm)			Crate Total weight incl package (kgs)	Internal Carton Dimensions (mm)				Carton weight (kgs)	Description
Width	Length	Height		Width	Length	Height	Carton Qty		
690	2970	775	225	320	2940	200	1	43	Main Beam/Gutters/Control rods
				360	2920	320	1	31	Louvre Blade (Contains Driving Blade)
				360	2920	320	1	34	Louvre Blade
				370	2950	260	1	48	Post/Motor/Accessories
Optional Pergola Privacy Blinds Packaging				220	2790	140	1	31.7	Guided Zip Track Blind

The included anchors are for the standard concrete foundation design detailed in this document and certified by independent Engineers. Any other foundation type, including a wood deck, will require you to seek advice from an Engineer, which will stipulate the fasteners that are required.

Vortex Pergola™ 3300 Model

Crate Packaging FAQs

How will the Pergola crate be removed from the delivery truck?
The crate will be removed from the delivery truck using a HiAb crane to safely lift the large crate off the truck.

Will the delivery team place the Pergola crate in my backyard?
The delivery team will transport the crate to the kerbside or driveway as long as it can be safely reached using the HiAb crane.

Where will the delivery team place the Pergola crate?
The delivery team will safely place the crate at the roadside or your driveway using a HiAb crane.

Will the delivery team remove the Pergola packaging?
We do not offer a packaging disposal service and you will be responsible for removing any packaging material.

How do I dispose of the Pergola packaging?
To dispose of the packaging, we suggest breaking it down into smaller parts and loading them onto a Ute or into a trailer. Alternatively, you can consider hiring a service to pick up the packaging from your location.

What size of vehicle do I need if I want to pick up the pergola myself?
The size of the vehicle you would need for a self pick-up will depend on the crate packaging, dimensions, and weight of the pergola. Vortex™ Pergolas come in various sizes, so it is important to know the specific dimensions of the one you want to pick up. Once you have the dimensions, you can then determine the appropriate size of the vehicle, such as a pick-up truck or a larger van, that can accommodate the pergola without any overhang or safety concerns. Please refer to the packaging page earlier in this document for weights and dimensions.

Vortex Pergola™ 3300 Model

Packaging Info.

Delivered in individual cartons

Standard Dimension (meters)			Packing Box Size (mm)			Total Package/ Set	N.W (kgs)	G.W (kgs)	Total N.W (kgs)	Total G.W (kgs)	Description
Width	Length	Height	Width	Length	Height						
3	3	2.7	330	2980	210	4	42	47	206	230	Main Beam/Gutter/Control Rod
			322	2956	290		58	65			Louvre Blade (Contains Driving Blade)
			322	2956	290		58	65			Louvre Blade
			330	2950	280		48	53			Post/Motor/Accessories
Optional Pergola Privacy Blinds Packaging											
	3	2.7	170	2825	220	1	21	25	21	25	Guided Zip Track Blind

The included anchors are for the standard concrete foundation design detailed in this document and certified by independent Engineers. Any other foundation type, including a wood deck, will require you to seek advice from an Engineer, which will stipulate the fasteners that are required.

Optional Pergola Privacy Blinds

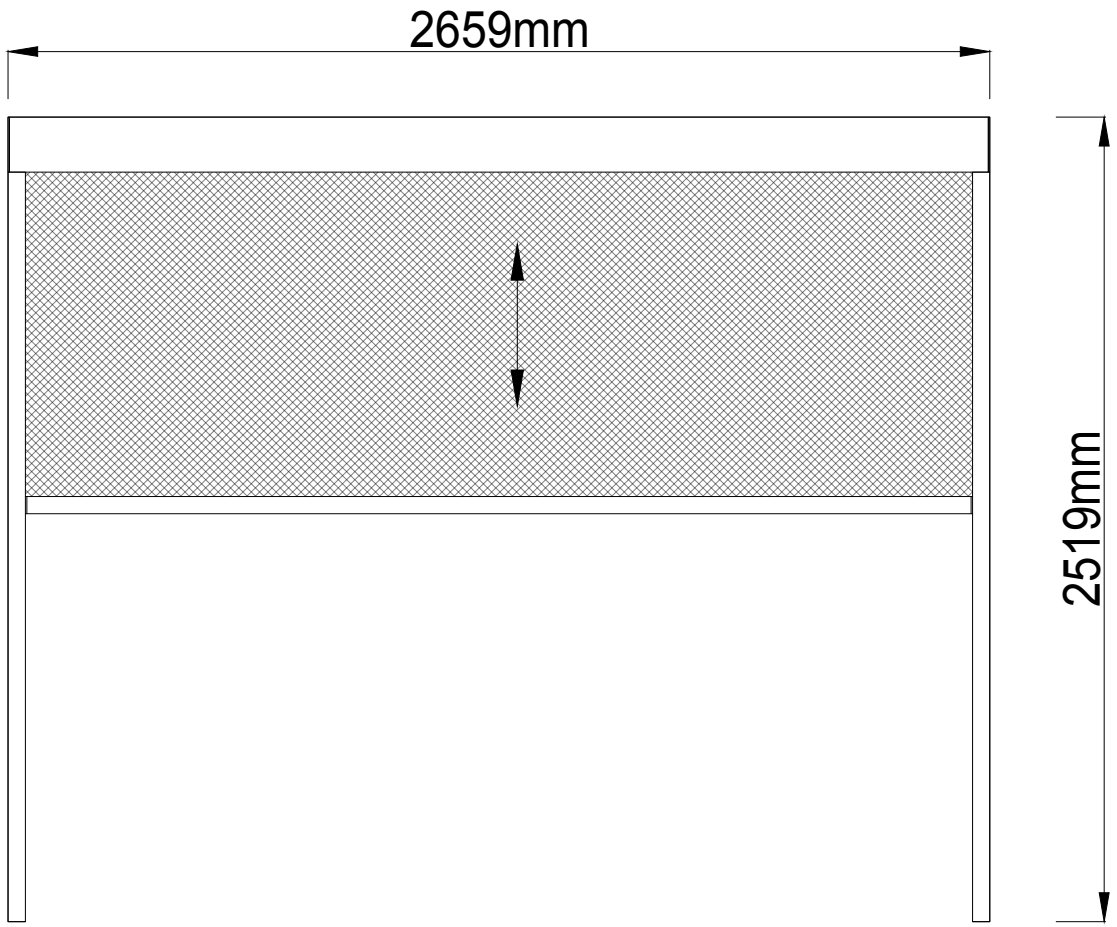

Side screen facade view

NOTICE

Equipotential Bonding Compliance Obligation

This product is subject to Equipotential Bonding compliance in accordance with the Australian and New Zealand Standards (AS/NZS 3000: 2018 Electrical Installations) otherwise known as the Wiring Rules. If this product is installed within arms reach of a body of water including spa, swim spa or pool, then Equipotential Bonding MUST be performed by a licensed electrical person prior to the product being used. This is a mandatory requirement. As the purchaser of this product, you are responsible for ensuring compliance with this requirement at your own expense.

Vortex Pergola™ 3300 Model

Drainage around your pergola

In most cases, you will need to install drainage around your pergola or gazebo if the roof is fully closed or can be closed. We always recommend checking local council regulations before you purchase or install a pergola.

- Your council may require you to install drainage around a pergola with fully closing louvres to catch the rainwater that flows across the louvres and down through the posts.

- Your council may also require water to be redirected to the household stormwater system, such as the downpipe system from your house.

Depending on your local regulations, you may not be allowed to let the water come out of the water spouts at the bottom of the pergola posts and onto the ground without drainage to catch and redirect it to the household stormwater system.

If you are installing your spa on an existing or new pad, you should consult with a building certifier before any installation to determine the requirements.

Vortex Pergola 3300 Model

Frequently Asked Questions

This section is designed to provide a simplified overview of current regulations in reference to Vortex Pergolas™. It is not state specific and therefore is not a complete guide.

We advise you to seek independent advice for your individual site requirements.

Do I need council consent to install a pergola?
This depends on the state you live in and the value of your complete project. Please contact your local council for the complete details.

Can I install my pergola onto a deck?
Yes, however, the engineering that has been done is based on a concrete footing. If you wish to put the pergola on a deck, you must have the foundation certified by an engineer.

Do I need engineering for my pergola?
Spa World provides engineering documents on the following pages. The engineering is based on standard concrete foundations. Any variation from the standard foundation will require re-engineered certification.

Do I need an Electrician for the installation of my pergola?
Yes, a licenced electrician is require to hardwire the electrical supply to the motorised pergola. The cable can be hidden by running it through the posts for a tidy finish.

How Many motors are on the Vortex pergolas?
3300 = 1
3400 = 2
4600 = 2

How far do the louvres open?
Roughly 90°

Do Vortex Pergolas have a wind rating/classification?
Yes, you can find that on the following pages.

How long does it take to install a pergola?
Each installation will vary based on many factors including, location, foundations, workers availability and experience etc. As a guide, a pergola can take 4-6 hours with 3 people.

What grade of aluminium is used in the Vortex Pergolas?
6063-T5. (Detailed information available in the following pages)

Are the pergolas available in a lower height model?
Unfortunately, we cannot provide custom sizes.

Am I able to attach the pergola to an existing structure, such as a house?
We recommend that you discuss this option with your builder/ engineer.

Can we have changing colours in the LED Lighting?
Unfortunately, we are unable to offer this at this stage.

Do the Louvres automatically close when it rains?
The louvres do not automatically close when it rains.

Does Spa World offer an installation service for Pergolas?
Unfortunately, Spa World is unable to offer an installation service. Please talk with your sales consultant and they can provide installation contractor options.

How do I get the pergola from the curbside delivery point to the final location?
We suggested to unpackaged the individual cartons and transport them to the final place. Note, the weight of each carton from this sheet. Use the correct number of people and safe lifting practices.

Vortex Pergola™ 3300 Model

Installlation Video

Please follow the URL or scan the below QR code with your smart device camera to access the installation video.

https://www.qrs.ly/pfcwvr3

Please note that the instruction assembly steps detailed in the video may be slightly different from the manual, however, either is fine to use.

Vortex Pergolas™ Limited Warranty

Vortex Leisure Pty Ltd owns the Vortex Pergolas™ brand

15-year structural warranty

Vortex Leisure Pty Ltd warrants the structural integrity of the pergola frame against defects in workmanship and materials for 15 years subject to the limitations, conditions and exclusions expressed in this warranty.

5-year powder coat warranty

Vortex Leisure Pty Ltd warrants the powder coat for a period of 5 year from the date of delivery. Fading and peeling may naturally occur over time and will not be covered under warranty. Damage caused to the powder coat due to improper use or handling not be covered under warranty. Disposal of any component replaced under warranty will be the owners responsibility.

2-year lighting warranty

Vortex Leisure Pty Ltd warrants against any defects in the LED lighting supplied by Vortex Leisure Pty Ltd for a period of 2 year from date of delivery. This warranty does not cover damage to the lights caused by incorrect use.

3-year motor warranty

Vortex Leisure Pty Ltd warrants the motor against defects in materials and workmanship for a period of 3 year from date of delivery. This warranty does not cover damage to the motor caused by incorrect use or installation.

1-year electronic components warranty

Vortex Leisure Pty Ltd warrants electronic control systems against defects in materials and workmanship for a period of 1 year from date of delivery.

1-year louvre roof warranty

Vortex Leisure Pty Ltd warrants the louvre roof and its components against defects in materials and workmanship for a period of 1 year from date of delivery. Fading and weathering of the surface may occur naturally over time, and are not considered defects.

1-year pergola blinds tracks, structure and mechanism warranty

Vortex Leisure Pty Ltd warrants the pergola blinds tracks, structure and mechanism against defects in materials and workmanship for a period of 1 year from date of delivery. The blinds must remain retracted when not in use. High winds can damage the blinds and this damage will not be covered under warranty. Fading and weathering of the surface will occur naturally over time, and are not considered defects and will not be covered under warranty.

3-year pergola blinds fabric warranty

Vortex Leisure Pty Ltd warrants against any defects in the fabric for a period of 3 years from the date of delivery. Fading and weathering of the surface will occur naturally over time, and are not considered defects and will not be covered under warranty. The blinds must remain retracted when not in use. High winds can damage the blinds and this damage will not be covered under warranty. Fading and weathering of the surface will occur naturally over time, and are not considered defects and will not be covered under warranty.

Warranty coverage

Warranty coverage begins at the delivery date. Vortex Leisure Pty Ltd only extends this warranty to the original purchaser and only if the pergola has been purchased through an authorised Vortex Leisure Pty Ltd reseller. Written notice of the defect and proof of purchase must be provided to Vortex Leisure Pty Ltd or it's nominated representative within 14 days of the defect occurring. If the pergola is required to be returned to Vortex Leisure Pty Ltd for rectification all freight costs shall be pre-paid by the customer. Repair or replacement of any defective product is at the sole discretion of Vortex Leisure Pty Ltd. To action warranty service contact the authorised Vortex Leisure Pty Ltd reseller you purchased from. If you are unable to obtain satisfactory service from your reseller written notification must be provided to Vortex Leisure Pty Ltd within 14 days of the defect occurring.

Pergola Installation

We recommend that the pergola is installed by qualified builder.

Electrical connection

Any required electrical work must be carried out by a licensed electrician. Vortex Leisure Pty Ltd reserve the right to ask for proof that the pergola has been installed by a qualified electrician.

Warranty exclusions

1. Damage resulting from improper maintenance.
2. Damage caused to the pergola by improper use and natural fading from sunlight.
3. Acts of God including but not limited to weather events.
4. Damage cause by corrosion
5. Issues arising from incorrect installation including the Pergola being built on an uneven/unlevel surface.
6. Damage caused by incorrect electrical installation, brownouts, voltage spikes or operating pergola out of +/- 10% of voltage range.
7. Commercial use reduces all warranties to maximum 6 months.
8. Damage caused by relocation of the pergola from its original installed location.
9. Damage caused by third party carriers.
10. Drain or gutter leakage.
11. Remote batteries are excluded from the warranty.
12. Any rust on ground attachment anchors.

Limitations

This warranty is the only warranty offered by Vortex Leisure Pty Ltd and excludes any other implied or oral undertakings. Except as described above, this warranty does not cover defects or damage due to normal wear and tear, improper installation, alteration without Vortex Leisure Pty Ltd prior written consent, accident, acts of God, misuse, abuse, commercial or industrial use, use of an accessory not approved by Vortex Leisure Pty Ltd, failure to follow Vortex Pergolas™ or Owner's Manual, or repairs made or attempted by anyone other than an authorised representative of Vortex Leisure Pty Ltd. Vortex Leisure Pty Ltd or its agents will not be liable for any incidental or consequential loss or injury. Vortex Leisure Pty Ltd will not be liable for costs associated with but not limited to building alterations, removal costs, delivery costs or labour costs associated with the replacement or repair of pergola and parts.

Vortex™ Pergolas

Vortex™ Pergolas

Vortex Pergola™ 3300 Model

Certificate of Compliance

BARRASON'S ENGINEERS
Structural and Civil Consultants

Building Act 1993
Section 238(1)(a)
Building Regulations 2018
Regulation 126

CERTIFICATE OF COMPLIANCE FOR PROPOSED BUILDING WORK

This certificate is issued to

TBA

This certificate is issued in relation to the proposed building work at:

N/A – the Vortex 3300 Aluminium Pergola

Nature of proposed building work

Construction of a *new building/*extension/*alteration/*change of use/*demolition/*removal/*re-erection of a building

Building classification as per NCC 2019

Part of building: 3x3 m Aluminium Gazebo BCA Classification: 10a

Prescribed class of building work for which this certificate is issued:

Design or part of the design of building work relating to *Structural matter*

Documents setting out the design that is certified by this certificate

Document no.	Document date	Type of document	No of Pages	Prepared by
2010071	19/11/20	Structural Assessment Report	14	Barrason's Engineers
GE2032JO	10/07/20	Drawings (isometric view, elevation view, connections)	3	AlunoTec

The design certified by this certificate complies with the following provisions of Building Act 1993, Building Regulations 2018 or National Construction Code Volume 2

Act, Regulation or NCC	Section, Regulation, Part, Performance Requirement or other provision
NCC 2019 Volume 2	Part 3.2, 3.4 & 3.11 of the NCC Vol2-2019 including relevant Australian Standards: AS1170.0, AS/NZ1170.1-2002, AS/NZ1170.2-2011, AS1664.1, AS4100, AS4055, AS4673

I prepared the design, or part of the design, set out in the documents listed above.

I certify that the design set out in the documents listed above complies with the provisions set out above.

I believe that I hold the required skills, experience and knowledge to issue this certificate and can demonstrate this if requested to do so.

Engineer:

Name: Andrew Barraclough
email: admin@barrasons.com.au
Business licensing authority registration number:

Registrations: FIEAUST, CPEng, NER, RBP
Qualifications: BEng MEng PhD
PE0000600
RPEQ 22822

Signed:

Date of issue of certificate: 01/03/2022

BARRASON'S ENGINEERS
Structural and Civil Consultants

19 November 2020

Reference: 2010071

Attention: Tony Jones, SPA WORLD

Dear Tony,

Re: Structural Assessment of 3x3 Aluminium Gazebo from AlunoTec

This report is a structural assessment of the **3x3** metre aluminium gazebo manufactured by AlunoTec and is intended solely for the use by Spa World Australia.

The structural frame of the gazebo will be stable when built on a residential site classed up to the following residential wind categories: **N4** and **C2**.
Ultimate Limit State wind speed: **61 m/s**
Serviceability Limit State wind speed: **39 m/s**

The design is in accordance with the following standards: AS1170.0, AS1170.1, AS1664.1, AS4055.1.

Design Assumptions and Limitations

- This design assumes that the louvres and any attached side screen will be open on days of strong wind.
- It is assumed any attached side screen will be removed by the wind before the wind load is strong enough to destabilise the structure.
- A conservative simplified profile of the beam elements has been designed
- The aluminium louvres are non-structural and have not been assessed in this design
- It is assumed that a swim spa sits beneath the gazebo and that no goods or materials will be stored under the gazebo that block more than 50% of the cross-section exposed to the wind.
- This design has not considered snow loads - if constructing in areas exposed to snow contact this office for further guidance.

The computations for the gazebo follow.

Structural Member Properties

Cross-section profiles of structural members are contained in Drawing 3 provided by AlunoTec.

Material properties

The members are constructed from Grade 6063-T5 Aluminium of below properties:

Property	Fty	Ftu	Fcy	Fsu	Fsy	Fbu	Fby	E
Strength (MPa)	110	152	110	90	62	317	179	70,000

Calculated Structural Properties

Column:

120 x 120 x 1.4 mm RHS length 2700 mm

Lb (mm)	2700
A (mm^2)	653
Ixx (mm^4)	1516418
Iyy (mm^4)	1516418
J (mm^4)	2335512
rx	48.18955
ry	48.18955
ct=cc (mm)	60
Zcx (mm^3)	25273.63
Zcy (mm^3)	25273.63
ʎ	1.55536
S1	0.53954
S2	1.253361
Øcc	0.79775
kt	1
kc	1.12
b (mm)	120
t (mm)	1.4
h (mm)	120

Simplified Beam:

170 x 25 x 1.5 mm RHS length 3000 mm

Lb (mm)	4000
A (mm^2)	609.0015
Ixx (mm^4)	1696741
Iyy (mm^4)	74500.5
J (mm^4)	245019.7
rx	52.78355
ry	11.06039
ct=cc (mm)	85
Zcx (mm^3)	19961.66
Zcy (mm^3)	5960.04
ʎ	
S1	
S2	
Øcc	
kt	1
kc	1.12
b (mm)	25
t (mm)	1.5
h (mm)	170

Calculated Buckling Constants for Temper 5 Designation

Columns

Bc	119.264
Dc	0.492
Cc	99.330

Bp	134.288
Dp	0.588
Cp	93.608

Bt	132.002
Dt	3.624
Ct	*

Bbr	194.517
Dbr	1.256
Cbr	103.260

Btb	198.003
Dtb	10.371
Ctb	95.687

Bs	75.864
Ds	0.250
Cs	124.542

k1 (flat plate compression)	0.35
k2 (flate plate compression)	2.27

k1 (flat plate bending)	0.50
k2 (flat plate bending)	2.04

Simplified Beam

Bc	119.264
Dc	0.492
Cc	99.330

Bp	134.288
Dp	0.588
Cp	93.608

Bt	132.002
Dt	3.624
Ct	*

Bbr	194.517
Dbr	1.256
Cbr	103.260

Btb	198.003
Dtb	10.371
Ctb	95.687

Bs	75.864
Ds	0.250
Cs	124.542

k1 (flat plate compression)	0.35
k2 (flate plate compression)	2.27

k1 (flat plate bending)	0.50
k2 (flat plate bending)	2.04

Design Loads

G + Q

Dead load: **self-weight**
Live load: **0.32 kPa**

Wind Loads

Residential Wind Speed Category in accordance with AS4055.1
Ultimate Limit State Wind Speed: **61 m/s**
Serviceability Limit State Wind Speed: **39 m/s**

Wind Load on Monoslope Free Roof with 0° pitch

Roof height	2700 mm
Roof depth	3000 mm
h/d ratio	0.9
Roof area	9 m^2
C_{pw} – uplift	-0.3
C_{pl} – uplift	-0.4
C_{pw} – down	0.4
C_{pl} – down	0
K_a	1
K_l	1
K_p	1
C_{fig} critical case	-0.4
ρ_{air}	1.2 kg/m^3
C_{dyn}	1
Critical Uplift Pressure ULS	**-0.893 kPa**
Critical Uplift Pressure SLS	**-0.365 kPa**

Wind Load on Side Beams

C_{pe}	0.8
ULS Wind pressure	**1.786 kPa**
SLS Wind pressure	**0.730 kPa**

Wind Load on Columns

l	2700
b	120
l/b	22.5
K_{ar}	0.85
K_i	1
$bV_{des\Theta}$ ULS	7.32
$bV_{des\Theta}$ SLS	4.68
C_d ULS – conservative	1.2
C_d SLS – conservative	1.2
Cfig ULS	1.02
Cfig SLS	1.02
ULS Wind pressure	**2.277 kPa**
SLS Wind pressure	**0.931 kPa**

Modelled Load Combinations

Case 1 – ULS: 1.35G
Case 2 – ULS: 1.2G + 1.5Q
Case 3 – ULS: 1.2G + W_u
Case 4 – ULS: W_u – 0.9G
Case 5 – SLS: 1G
Case 6 – SLS: W_s - G

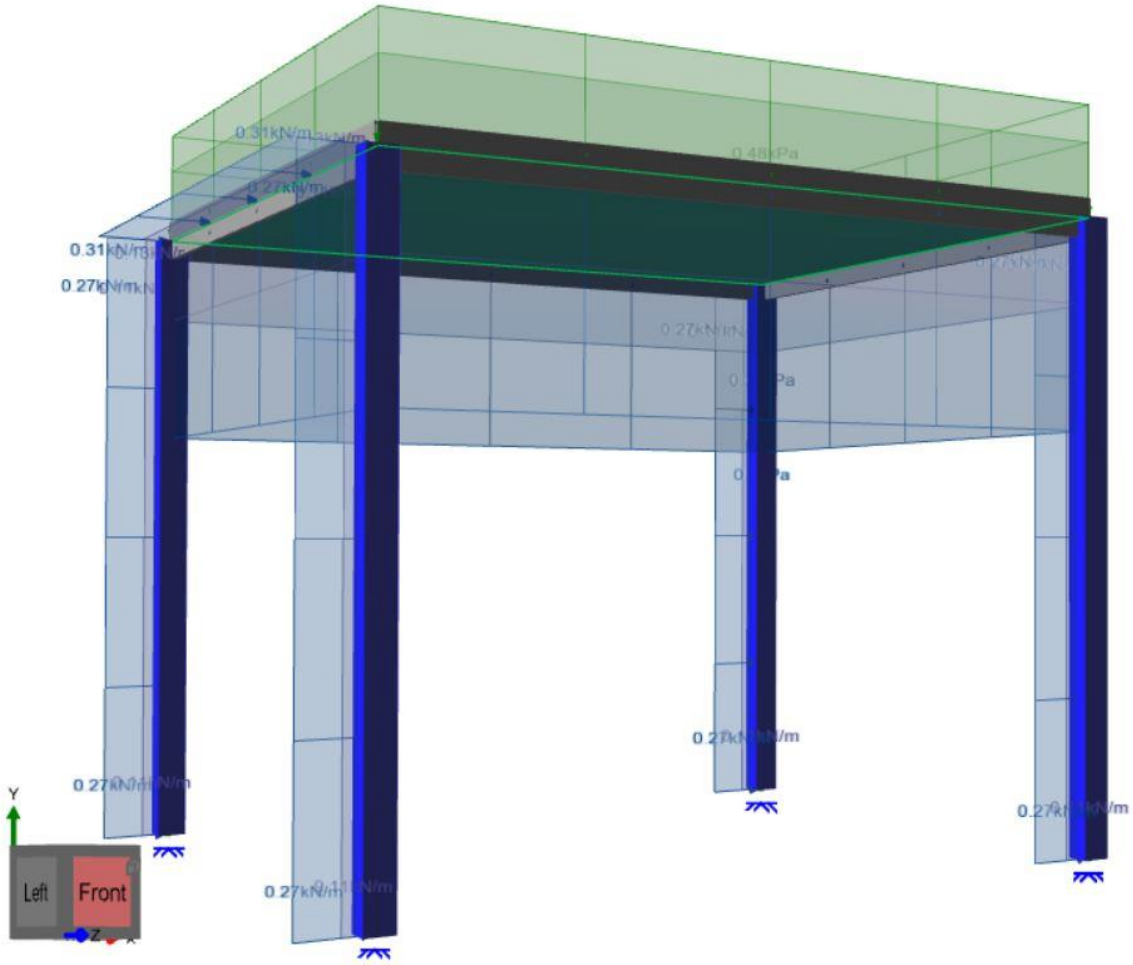

Figure 1 - Load cases applied to the Structure

Modelled Results

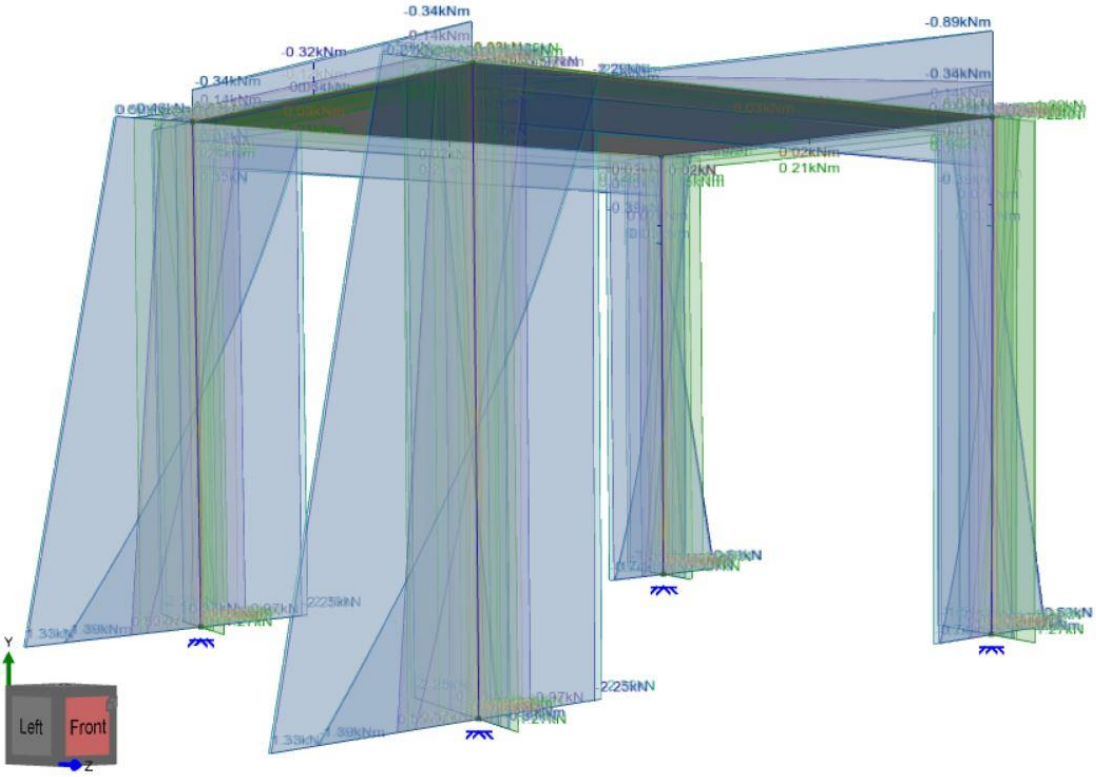

Figure 2 - Reaction Forces & Moments

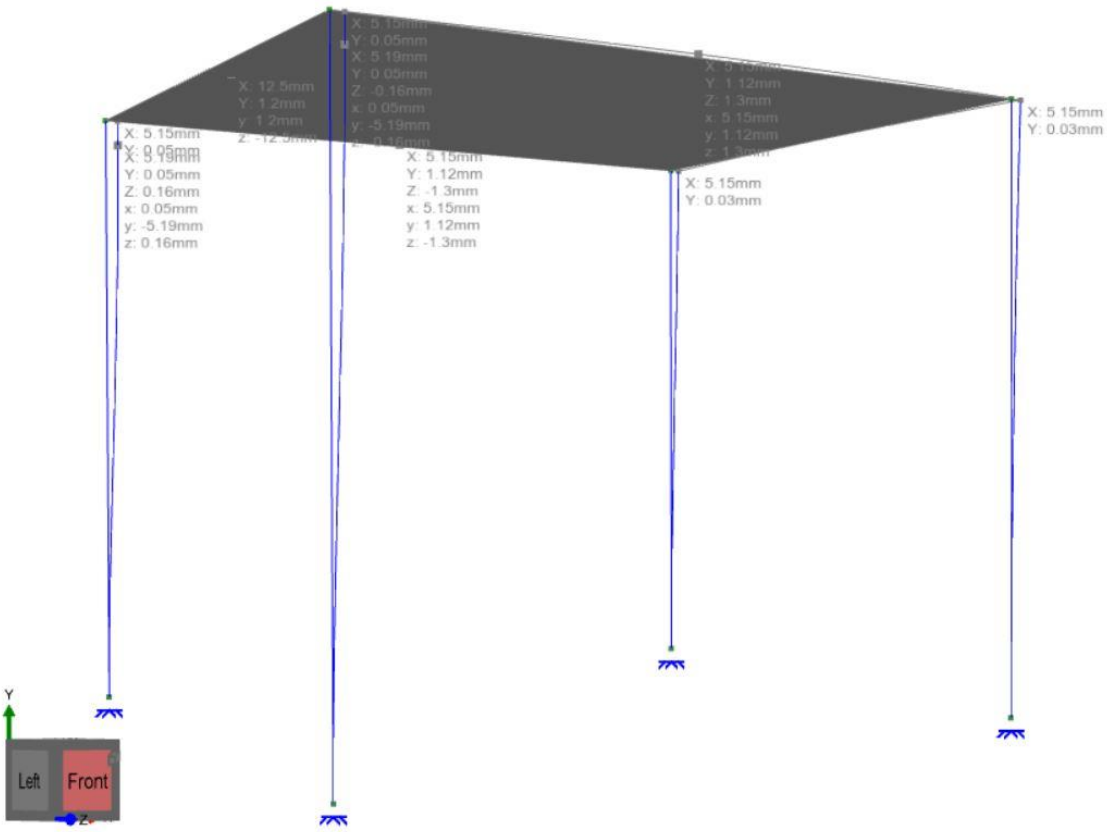

Figure 3 - Displacement Results

Calculated Design Stresses

Beams

Gross cross-sectional area	A_g	609.0015	mm^2
In-plane elastic section modulus	Z_{cx}	19961.659	mm^3
Out-of-plane elastic section modulus	Z_{cy}	5960.04	mm^3
Axial load compression	P_c	0	kN
Axial load tension	P_t	0	kN
In-plane Moment	M_x	0.89	kNm
Out-of-plane moment	M_y	0.05	kNm
Shear force	V	0.39	kN
Stress axial compression	$\mathbf{f_{a.c}}$	**0**	**MPa**
Stress axial tension	$\mathbf{f_{a.t}}$	**0**	**MPa**
Stress from in-plane bending	$\mathbf{f_{bx}}$	**44.585473**	**MPa**
Stress from out-of-plane bending	$\mathbf{f_{by}}$	**8.3892054**	**MPa**
Stress from shear force	$\mathbf{f_s}$	**0.6403925**	**MPa**

Columns

Gross cross-sectional area	A_g	653	mm^2
In-plane elastic section modulus	Z_{cx}	25273.633	mm^3
Out-of-plane elastic section modulus	Z_{cy}	25273.633	mm^3
Axial load compression	P_c	1.27	kN
Axial load tension	P_t	2.25	kN
In-plane Moment	M_x	1.39	kNm
Out-of-plane moment	M_y	0.39	kNm
Shear force	V	1.33	kN
Stress axial compression	$\mathbf{f_{a.c}}$	**1.9448698**	**MPa**
Stress axial tension	$\mathbf{f_{a.t}}$	**3.4456355**	**MPa**
Stress from in-plane bending	$\mathbf{f_{bx}}$	**54.998028**	**MPa**
Stress from out-of-plane bending	$\mathbf{f_{by}}$	**15.431101**	**MPa**
Stress from shear force	$\mathbf{f_s}$	**2.0367534**	**MPa**

Deflection Results

Beam

Modelled Deflection	L/250	Result
1.12 Y-axis, 12.5 X-axis	16	Pass

Column

Modelled Deflection	L/500	Result
5.15	5.4	Pass

Calculated Factored Limit Stresses

Overview

Beams

Stress Type	Clause	ØFL (MPa)
Tension in beams – rectangular tubes	3.4.3	104.50
Bearing – bolts in slotted holes	3.4.7	113.37
Compression in columns	3.4.8	35.39
Compression in columns components	3.4.10.1	93.30
Compression in beams – in-plane rectangular tube	3.4.15	92.25
Compression in beams – out-of-plane rectangular tube	3.4.15	90.48
Compression in beam components – uniform compression	3.4.17	93.30
Compression in beam components – own plane bending	3.4.22	85.71

Columns

Stress Type	Clause	ØFL (MPa)
Tension in beams – rectangular tubes	3.4.3	104.50
Bearing – bolts in slotted holes	3.4.7	113.37
Compression in columns	3.4.8	36.27
Compression in columns components	3.4.10.1	44.17
Compression in beams – in-plane rectangular tube	3.4.15	95.67
Compression in beams – out-of-plane rectangular tube	3.4.15	95.67
Compression in beam components – uniform compression	3.4.17	44.17
Compression in beam components – own plane bending	3.4.22	105.47

Tension Capacity

Beam

Factored Limit Stress ($Ø_{FL}$)	Yield	Ultimate
ϕ	0.950	0.900
Kt		1.00
Factored tension stress in beams (MPa)	**104.5**	136.8

f_a/F_a (tension)	**0**	

Column

Factored Limit Stress ($Ø_{FL}$)	Yield	Ultimate
ϕ	0.950	0.900
Kt		1.000
Factored tension stress in beams (MPa)	**104.5**	136.8

f_a/F_a (tension)	**0.0329726**	

Factored Bearing Stress on Bolts in Slotted Holes

Factored Limit Stress ($Ø_{FL}$)	Yield	Ultimate
Factored bearing stress bolts in holes (MPa)	**113.36667**	**149.69444**

Uniform Compression Capacity

Beam

Axial Compression of member

k (effective length factor)	2.2	
L (unsupported length)	3000	mm
r (radius of gyration about axis of buckling)	52.78355	
ʎ (slenderness parameter)	1.5777667	
Øcc	0.8008873	
Dc* (buckling formula constant for compression in columns)	39.013579	
S1*	0.53954	
S2*	1.2533612	
ØFL for columns in axial compression	**35.389835**	**MPa**

Uniform Compression in Flat Plate Components

b	22
t	1.5
b/t	14.666667
Øy	0.95
Øc	0.85
S1	26.054427
S2	49.943387
ØFL	**93.303571 MPa**

3.4.8.2

For closed cross sections:

Largest slenderness ratio for flexural buckling 125.04

f_a/F_A (compression)	**0**

Column

Axial Compression of member

k (effective length factor)	2.2
L (unsupported length)	2700
r (radius of gyration about axis of buckling)	48.18955
ʎ (slenderness parameter)	1.5553603
Øcc	0.7977504
Dc* (buckling formula constant for compression in columns)	39.013579
S1*	0.53954
S2*	1.253
ØFL	**36.27 MPa**

Uniform Compression in Flat Plate Components

b	22
t	1.5
b/t	83.71429
Øy	0.95
Øc	0.85
S1	26.05443
S2	49.94339
ØFL	**44.17 MPa**

3.4.8.2

For closed cross sections:

Largest slenderness ratio for flexural buckling 123.26324

f_a/F_A (compression)	**0.0536158**

Compression Capacity in Bending

Beam

In-plane & out-of-plane bending in general beam

Lb	3000
Zcx	19961.66
Zcy	5960.04
Ixx	1696741
Iyy	74500.5
J	245019.7
ϕy	0.95
ϕb	0.85
S1	21.80
S2	3854.05
LbZcx/.5 sqrt(IxxJ) in plane	185.75
LbZcy/.5 sqrt(IyyJ) our of plane	264.68
ϕFL in-plane (Fbx)	**92.25**
ϕFL out-of-plane (Fby)	**90.48**

Uniform compression in component

b	22.00
t	1.50
b/t	14.67
ϕy	0.95
ϕb	0.85
S1	12.06
S2	49.94
ϕFL	**102.41**

Compression bending about own plane in component

h	167.00
t	1.50
h/t	111.33
ϕy	0.95
ϕb	0.85
S1	41.23
S2	115.59
ϕFL	**85.71**

Capacity check

f_{bx}/F_{bx}	**0.4833148**	**PASS**
f_{by}/F_{by}	**0.09**	**PASS**

Column

In-plane & out-of-plane bending in general beam

Lb	2700
Zcx	25273.63
Zcy	25273.63
Ixx	1516418
Iyy	1516418
J	2335512
ϕy	0.95
ϕb	0.85
S1	21.80
S2	3854.05
LbZcx/.5 sqrt(IxxJ) in plane	72.52
LbZcy/.5 sqrt(IyyJ) our of plane	72.52
ϕFL (b) in-plane (Fbx)	**95.67**
ϕFL (b) out-of-plane (Fby)	**95.67**

Uniform compression in component

b/t	83.71
ϕy	0.95
ϕb	0.85
S1	12.06
S2	49.94
ϕFL	**44.17**

Compression bending about own plane in component

h/t	83.71
ϕy	0.95
ϕb	0.85
S1	41.23
S2	115.59
ϕFL	**105.47**

Capacity check

fbx/Fbx	**0.574856**	**PASS**
fby/Fby	**0.16**	**PASS**

Calculated Combined Axial Load & Bending Ratios

Beam

Combined Compression & Bending	**0.58**	**PASS**
Combined Tension & Bending	**0.58**	**PASS**

Column

Combined Compression & Bending	**0.79**	**PASS**
Combined Tension & Bending	**0.77**	**PASS**

Shear Capacity in Webs

Beam

Øy	0.95
Øv	0.8
Øvp	0.9
h	117
t	1.4
h/t	83.571429
S1	33.375518
S2 (intersecting h/t)	91.00917
ϕFL	**44.8 MPa**

fs/Fs	**0.0143**	**PASS**

Column

Øy	0.95
Øv	0.8
Øvp	0.9
h	117
t	1.4
h/t	83.571429
S1	33.375518
S2 (intersecting h/t)	91.00917
ϕFL	**44.8 MPa**

fs/Fs	**0.0455**	**PASS**

Local Buckling Stress in Beam

Clause	Fcr	Øy	ØFL	Fec	Øy*Fcr	ØFrb (MPa)
3.4.17	1254.5702	0.95	102.41	34482.502	1191.842	**102.4129**
3.4.22	124.16459	0.95	85.71	34482.502	117.9564	**85.71395**

Weighted Average of element cross-section: 90.83 MPa
Cannot exceed compressive stress in general beam: 92.25 MPa

Final local buckling check ratio of beam	**0.58**	**PASS**

Local Buckling Stress in Column

Clause	Fcr	Øu	ØFL	Fec	Øu*Fcr	ØFrc (MPa)
3.4.10.1	38.51	0.85	36.27	14.47	32.73	**23.622**

Weighted Average of element cross-section: 44.16 MPa
Cannot exceed compressive stress in general column: 36.27 MPa

Final local buckling check ratio of column	**0.818**	**PASS**

Column Connection Check

M8 x 100 Expansion Bolt check:

Bolt Capacity in Shear

ØVf	**7.26 kN**
Ø	0.8
Vf	9.0768
fuf	400 MPa
kr	1
nn	1
Ac	36.6 mm^2

Bolt Capacity in Tension

ØNtf	**11.71 kN**
Ø	0.8
Ntf	14.64
As	36.6 mm^2
fuf	400 MPa

Concrete Pull-out Capacity

Pull-out capacity	**11.16 kN**
Concrete grade	25 MPa
Shear strength	0.31 MPa
Embedded length	80 mm minimum

The column connections pass.

Regards,

Dr Andrew Barraclough
BEng Meng PhD FIEAust CPEng RBP

Motorized Pergola 3300™ model aluminiun pergola Sized 3000mm Length x 3000mm Projection x 2700mm Height

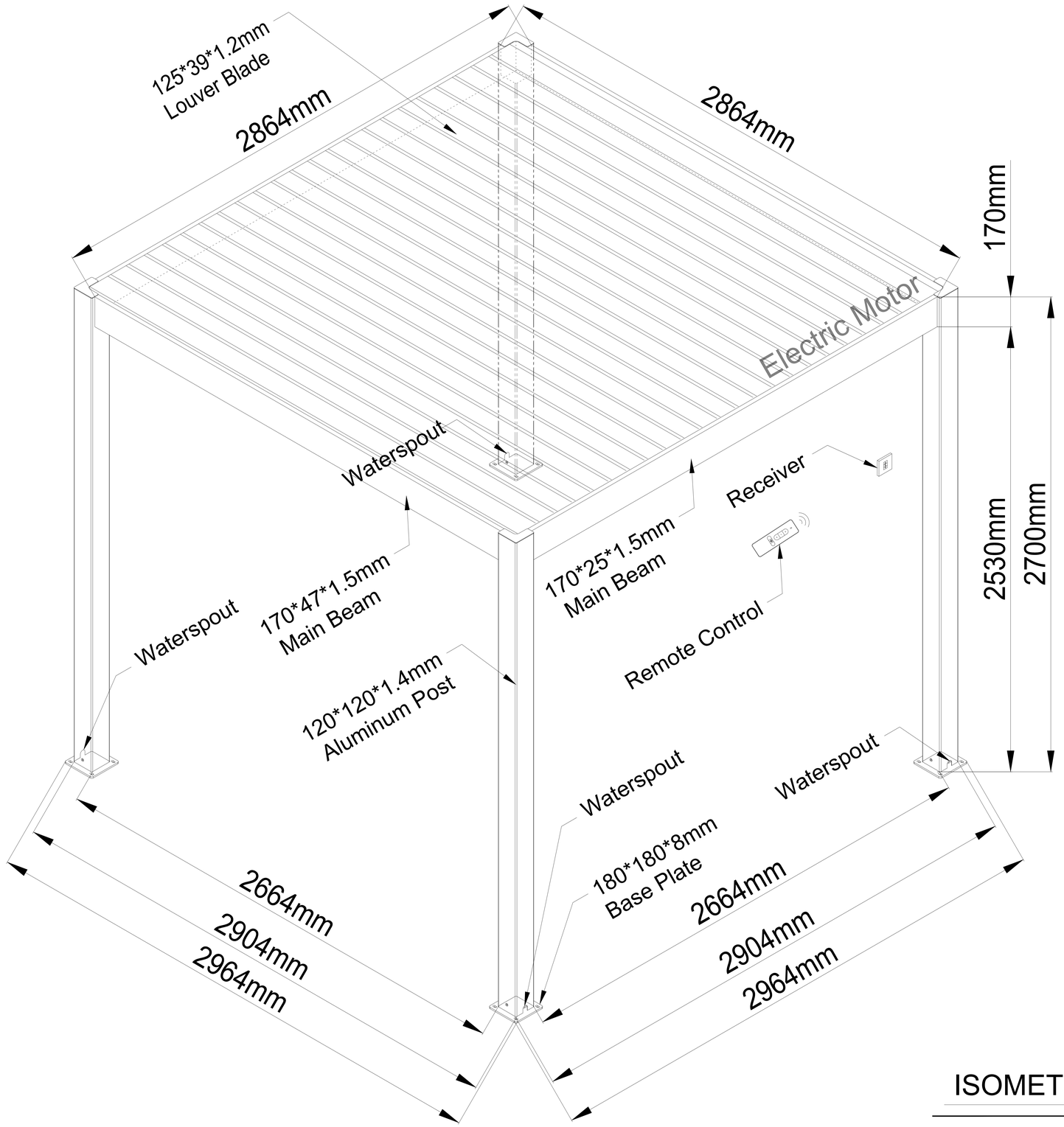

ISOMETRIC VIEW

TITLE :	
3300™ Pergola	
JOB :	
Standard Technical Detail	
DRAWING NO.:	
GE2032JO	
SCALE :	1 : 1
@ PAPER SIZE :	A4
DESIGNER :	Evan Lee
DRAWING DATE :	10/07/2020

COMMENTS :

Powdercoated Aluminium

Motorized Pergola 3300™ model aluminiun pergola Sized 3000mm Length x 3000mm Projection x 2700mm Height

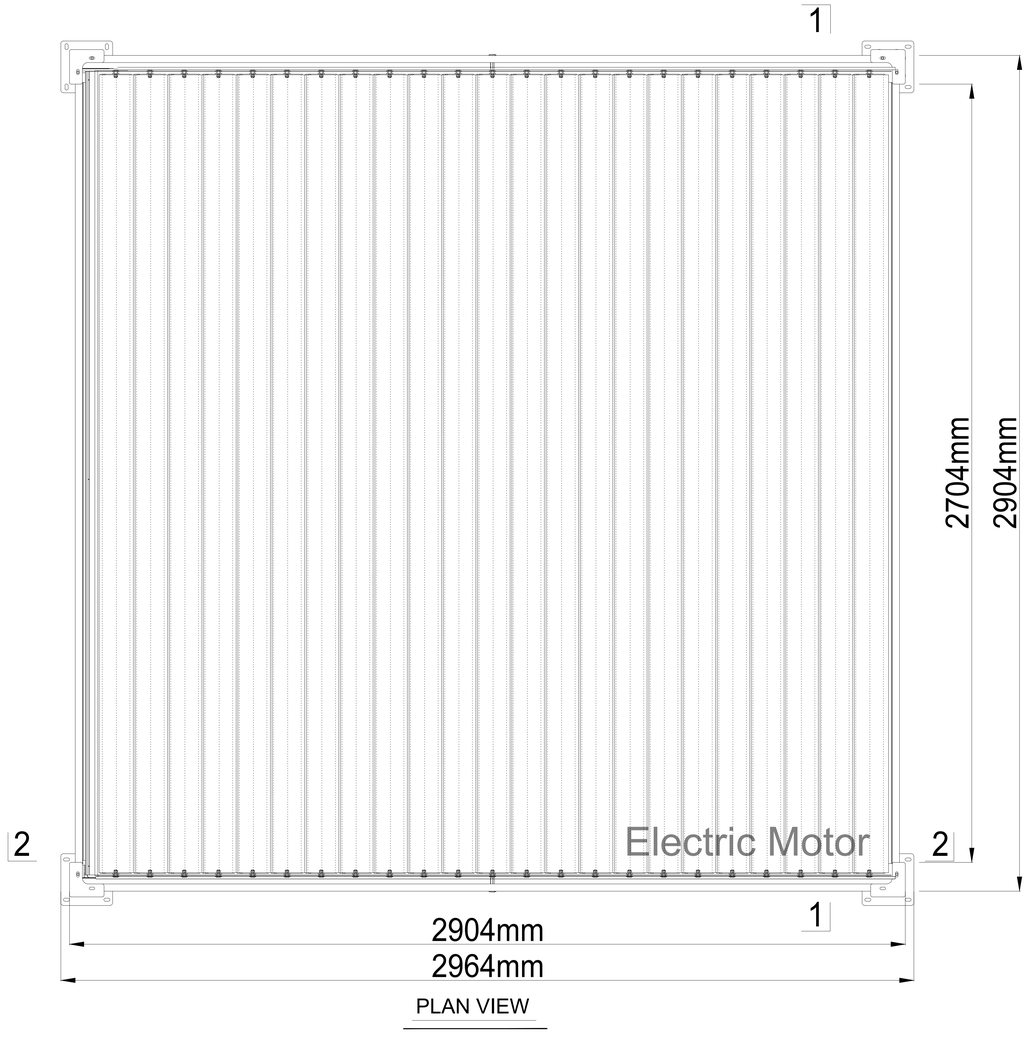

PLAN VIEW

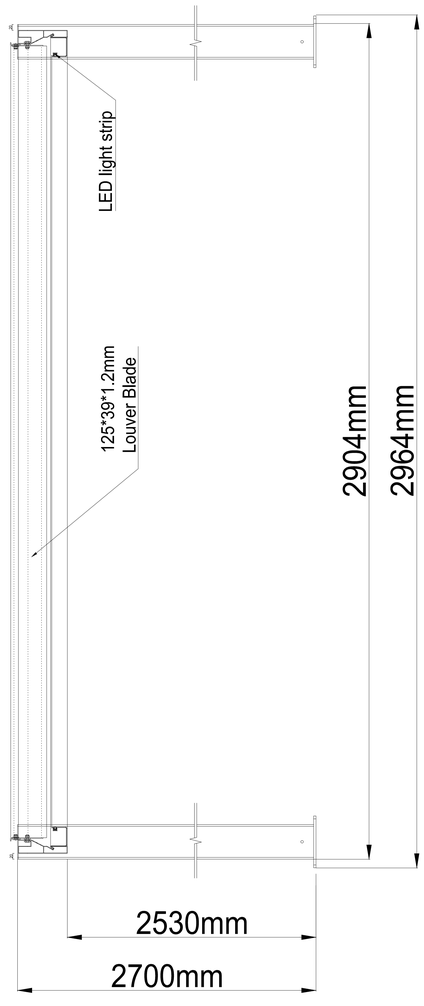

Elevation View 1-1

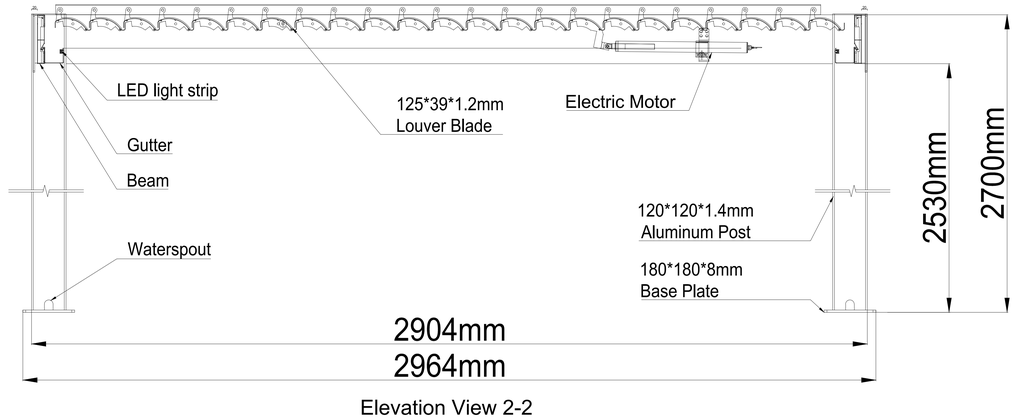

Elevation View 2-2

TITLE :	
3300™ Pergola	
JOB :	
Standard Technical Detail	
DRAWING NO.:	
GE2032JO	
SCALE :	1 : 1
@ PAPER SIZE :	A4
DESIGNER :	Evan Lee
DRAWING DATE :	10/07/2020

COMMENTS :

Powdercoated Aluminium

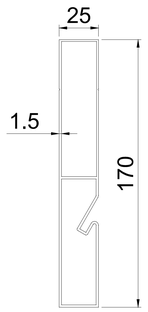

Beam1

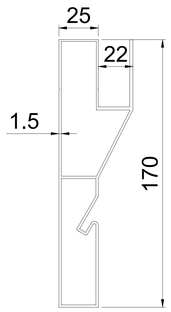

Beam2

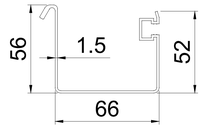

Gutter

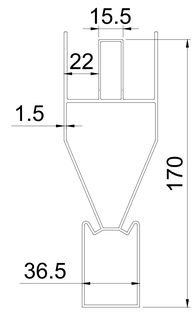

Middle Beam

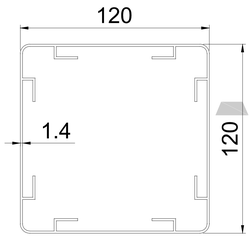

Post

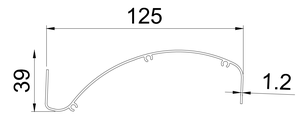

Louver Blade

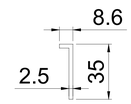

Control Rod

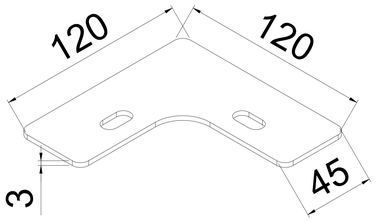

Post Top Cover

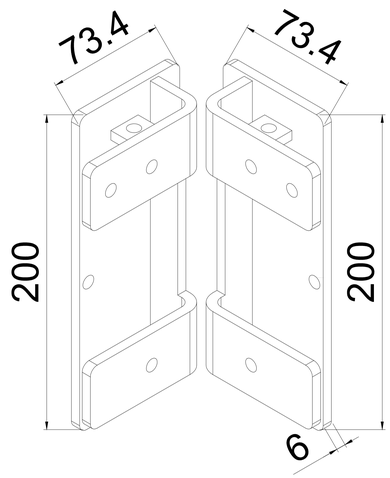

Post + Beam
Connector

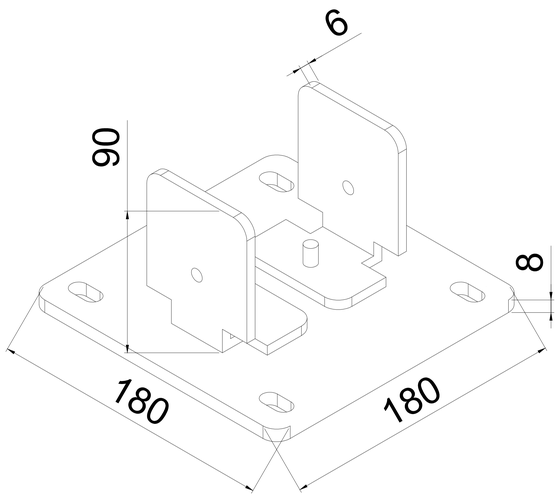

Base Plate

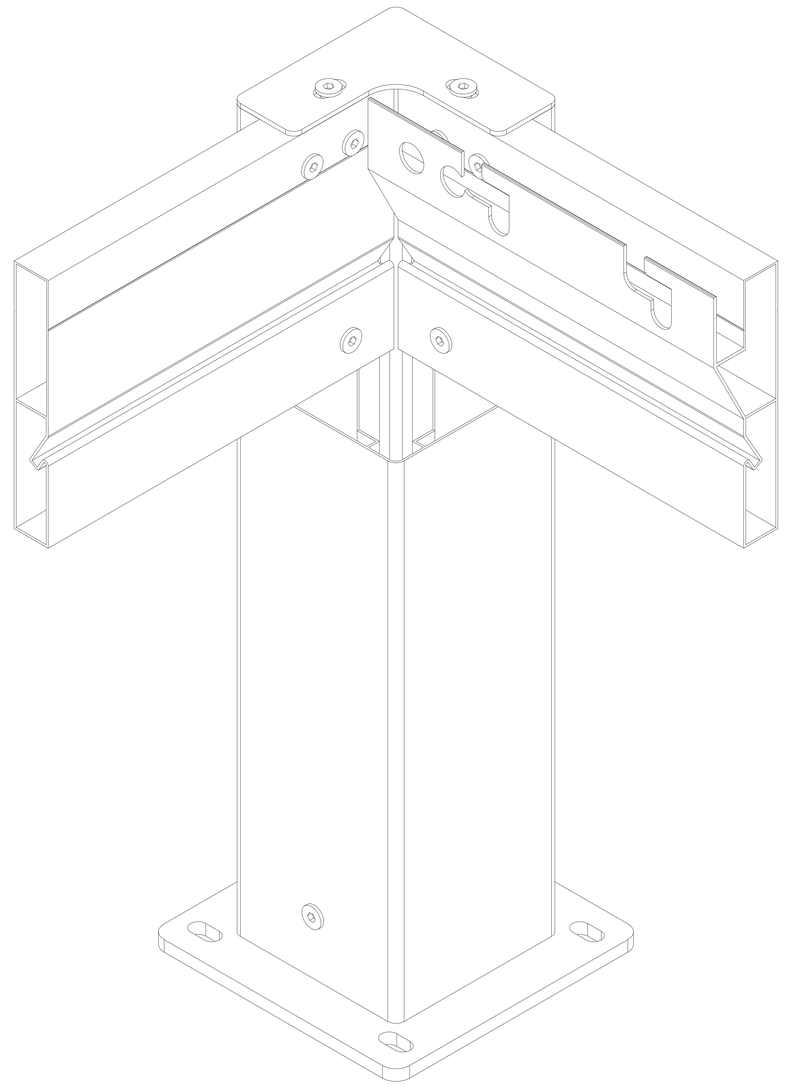

Motorized Pergola 3300™ model aluminiun pergola Sized 3000mm Length x 3000mm Projection x 2700mm Height

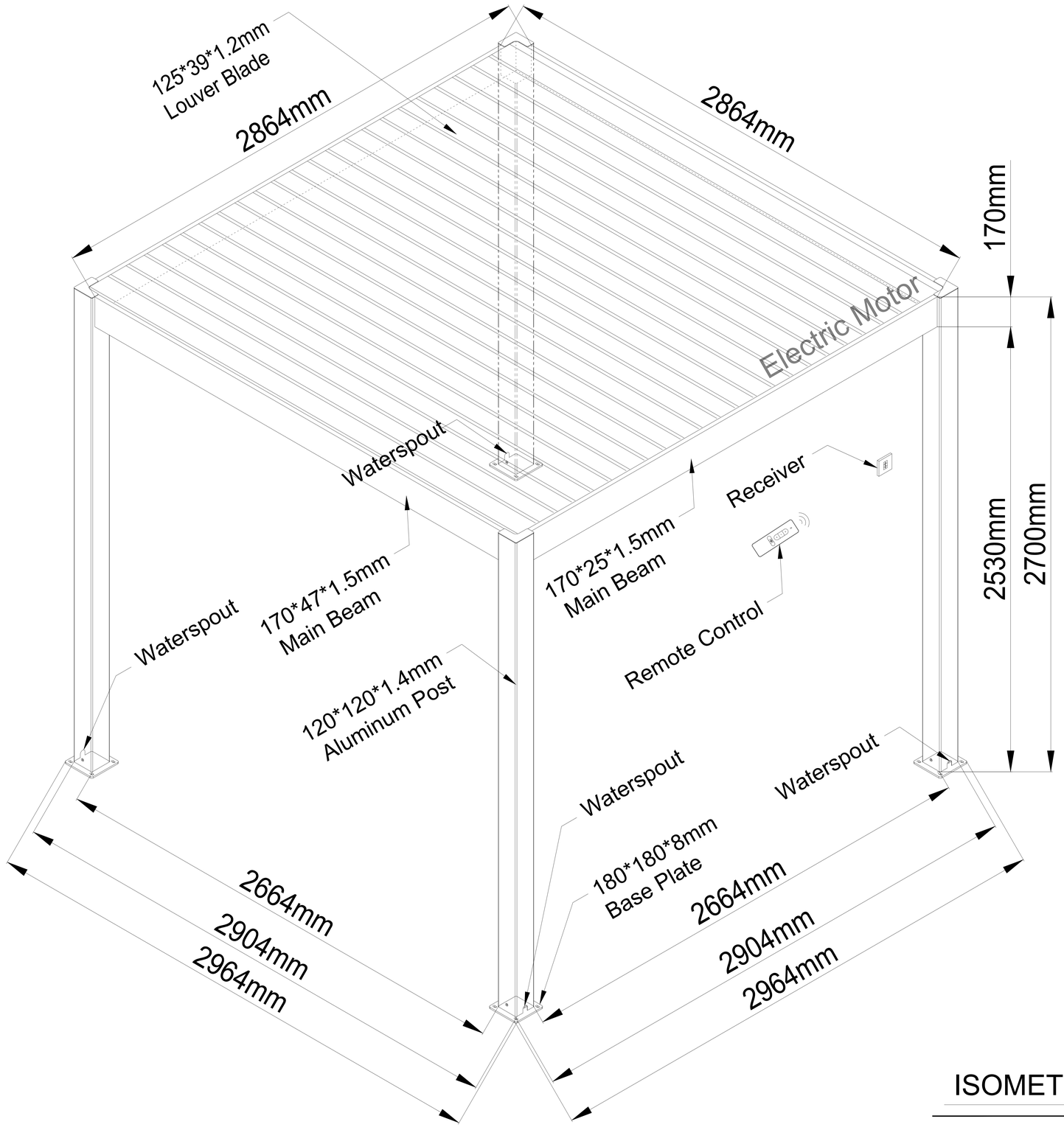

ISOMETRIC VIEW

TITLE :	
3300™ Pergola	
JOB :	
Standard Technical Detail	
DRAWING NO.:	
GE2032JO	
SCALE :	1 : 1
@ PAPER SIZE :	A4
DESIGNER :	Evan Lee
DRAWING DATE :	10/07/2020

COMMENTS :

Powdercoated Aluminium

Motorized Pergola 3300™ model aluminiun pergola Sized 3000mm Length x 3000mm Projection x 2700mm Height

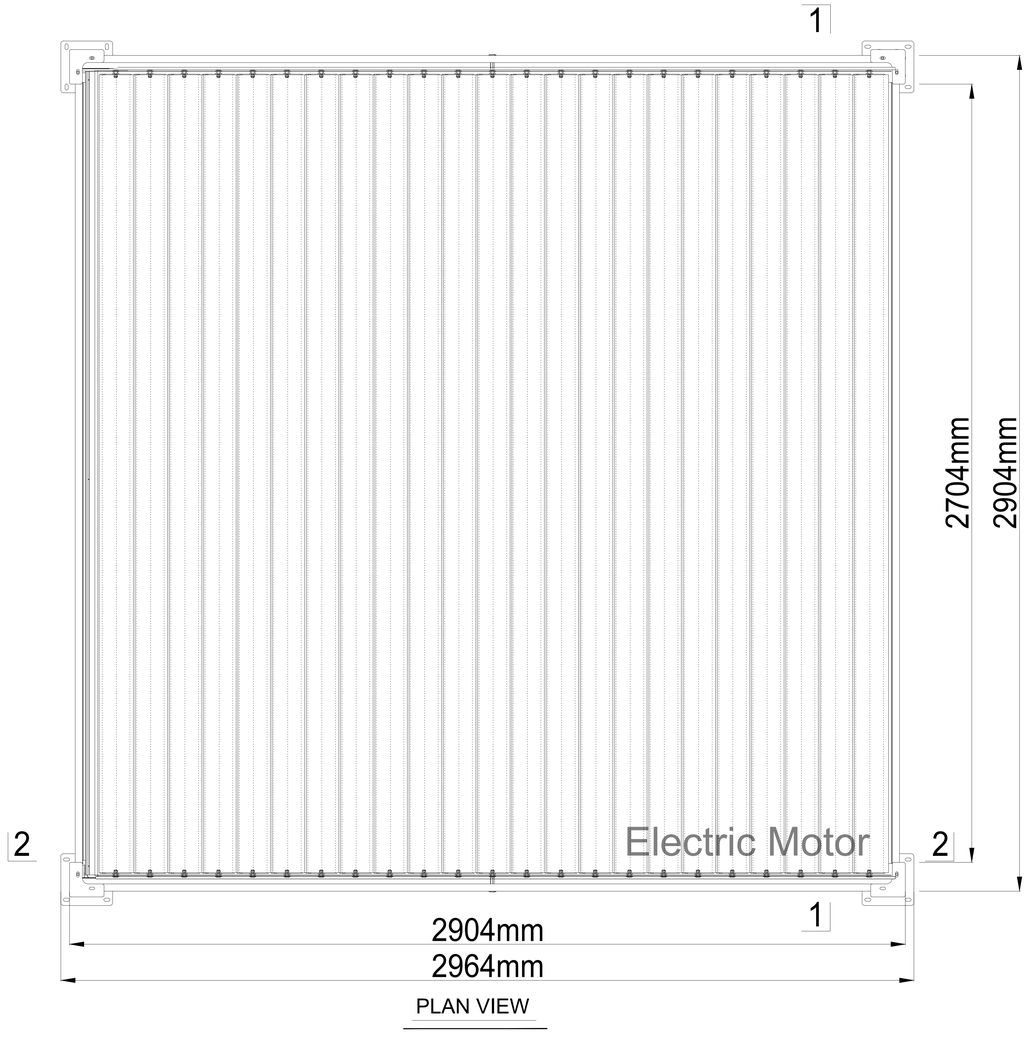

PLAN VIEW

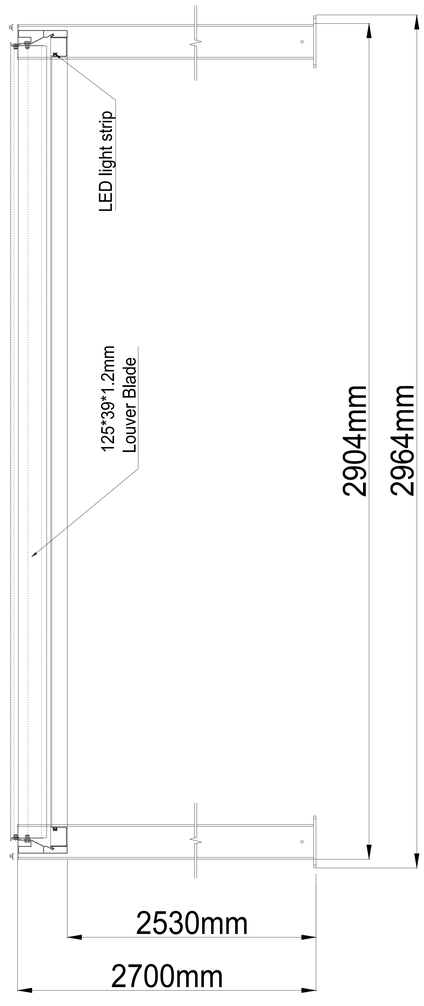

Elevation View 1-1

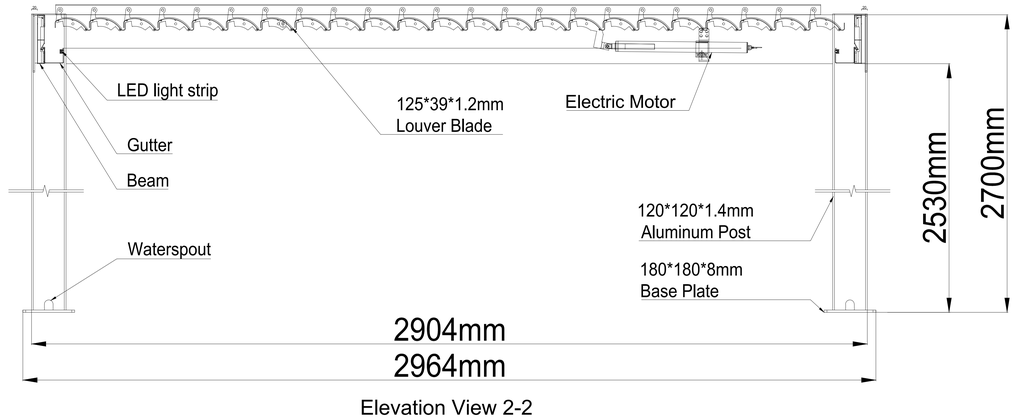

Elevation View 2-2

TITLE :	
3300™ Pergola	
JOB :	
Standard Technical Detail	
DRAWING NO.:	
GE2032JO	
SCALE :	1 : 1
@ PAPER SIZE :	A4
DESIGNER :	Evan Lee
DRAWING DATE :	10/07/2020

COMMENTS :

Powdercoated Aluminium

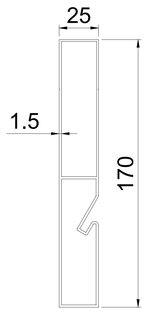

Beam1

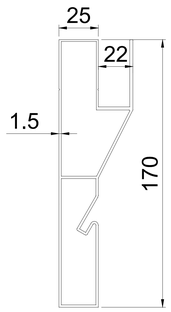

Beam2

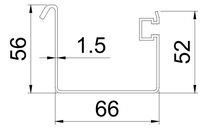

Gutter

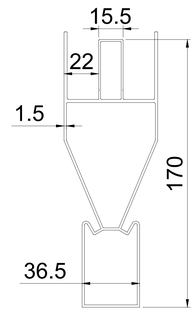

Middle Beam

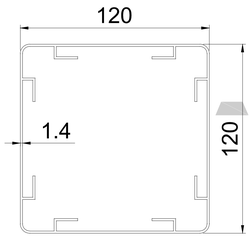

Post

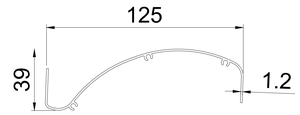

Louver Blade

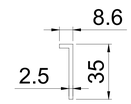

Control Rod

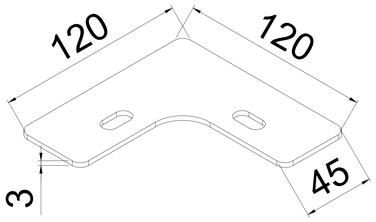

Post Top Cover

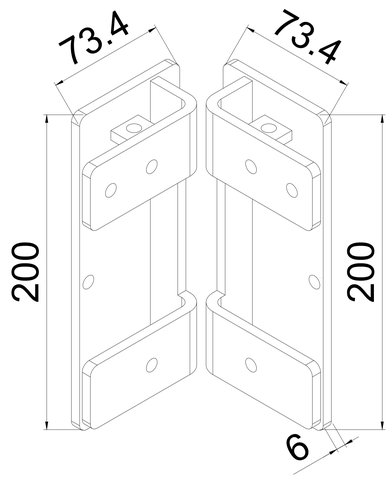

Post + Beam
Connector

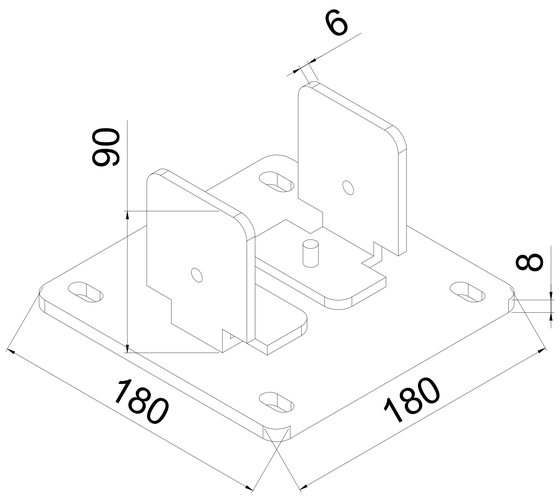

Base Plate

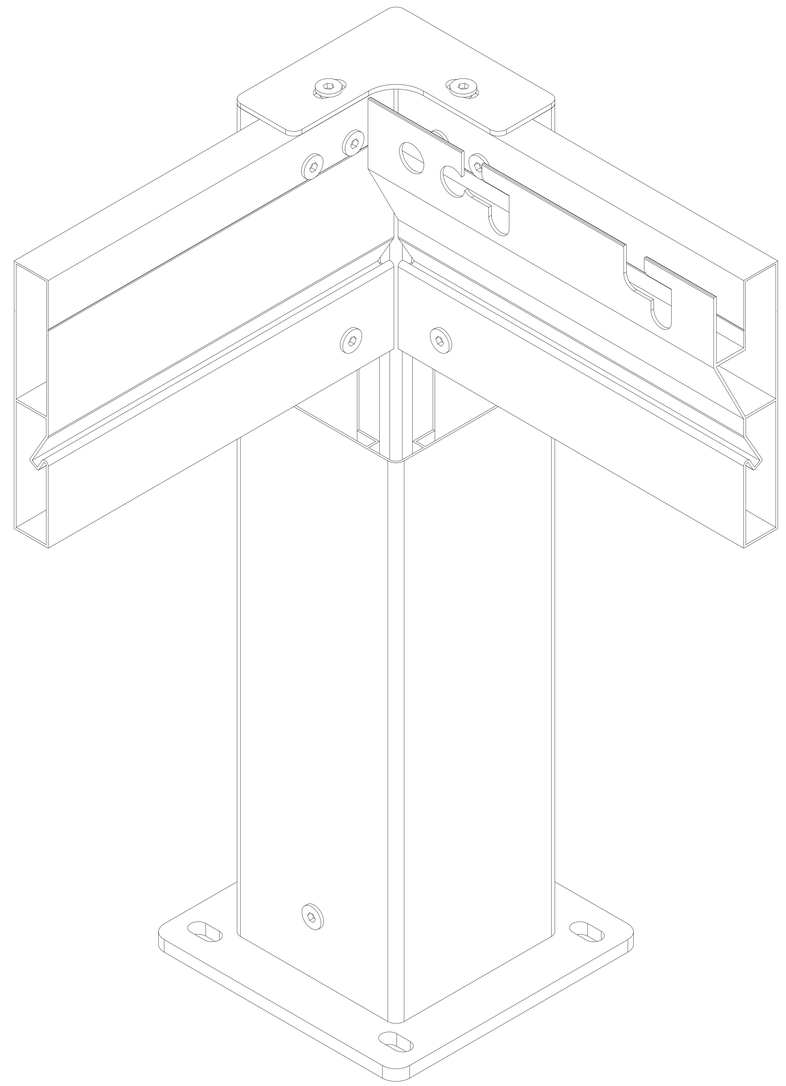

Vortex™ Pergolas

VXPTS3300140224