EnVisionLED™
WWW.ENVISIONLEDLIGHTING.COM

Project: _____ Part #: _____
Type: _____

Linear Fixtures

Arcy-Line: Architectural Linear Fixtures G2

5-CCT & 3-Power Selectable

BOTTOM

TOP

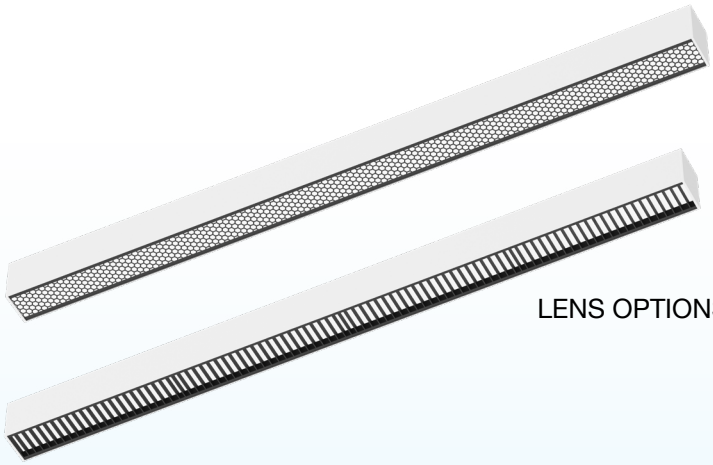

LENS OPTIONS

The ARCY-Line Direct/Indirect Architectural G2 luminaires offer a 2" sleek and modern appearance with symmetrical light distribution. They can be surface, wall, recess, trimless, or pendant mounted. The luminaire provides flexible and creative illumination design options, including direct, indirect, and wall wash lighting, with fully illuminated corners for seamless connections between luminaires. It is designed to make an enduring impression in corporate offices, educational institutions, commercial spaces, and retail environments. Upgraded features include easier installation, improved internal structural changes, and field install accessories.

Detail Specifications:
- Finish: White or Black (Stocked)
  - Custom powder coat finishes available
- IP Rating: Damp Location (IP44)
- Up & Down Beam Angle: 110°
- Chip: SMD 2835, R9 >50, CRI >90
- Operating Temperature: -4° - 114° F
- Lens Options
  - Standard: Acrylic Frosted Lens: efficiently emits the light through a high-quality acrylic lens, spreading it evenly and without causing glare
  - Honeycomb: improves glare and unique aesthetic
  - Anti-Glare: frosted lens with a reduced glare lens
- Average life (L70) of 50,000 hours

Applications:
- Office and Meeting Rooms
- Retail
- Commercial and Industrial
- Stairwell & Hallways
- Utility & Storage

Product Information:
- Construction:
  - One piece aluminum extrusion housing that incorporates a precisely cut, smooth extruded lens that securely attaches to the body and allows easy removal for accessing the driver and LED boards when needed
  - Solid aluminum end caps are included
  - Finished with corrosion free powder coat
- Select-n-Switch Technology: 5-CCT + 3-Power Selectable

Seamless Connection:
- Fixture is pre-wired for easy daisy chain
- No additional wiring is required for continuous run
- Connector brackets to link fixtures in a continuous run must be purchased separately
  - Model#: ALIN2-JOIN

Driver Options:
- Max Run: 600W off one power feed
  - Maximum run by foot chart on page 3
- UNV: 100-277V 0-10V Dimmable (Dim-to-off)
- THD: <20% (+/-5% tolerance), PF >0.9, 50/60Hz
- 3-Power Selectable
- Flicker Free

Mounting & Installation (Sold Separately):
- Max Run: 600W off one power feed
  - Maximum run by foot chart on page 3
- UNV: 100-277V 0-10V Dimmable (Dim-to-off)
- THD: <20% (+/-5% tolerance), PF >0.9, 50/60Hz
- 3-Power Selectable
- Flicker Free

Certifications:
- ETL Listed for USA and CA
- DLC Standard Listed (Pending, ETA 07/2026)
- Approved for CA T24
- 5 Year Limited Warranty
- FCC CFR 47, GCC Part 15, Subpart B:2017

Specs and model numbers are subject to change with or without notice

ORDERING GUIDE

LINEAR MODELS

Series	Lens	Length & Wattage	Light Direction	CCT	Finish [1]	Emergency	Mounting Options
LED-ALIN2 Architectural Linear	**FL** Frosted Lens (Standard) **HC** Honeycomb **AG** Anti-Glare Baffle	**1FT-3P12** 12/9/6W **2FT-3P25** 25/19/13W **3FT-3P38** 37.5/28/18W **4FT-3P50** 50/38/25W **6FT-3P75** 75/56/38W **8FT-3P100** 100/75/50w	**D** Downlight **UD** Downlight & Uplight **DUD** Downlight & Uplight Controlled Seperately (View Chart for Lumens/Wattage)	**5CCT** 27/30/35 40/50K	**WH** White **BL** Black **CUSTOM[1]** Custom Color View our RAL Chart	**(blank)** **EMB** Emergency Backup	**(blank)** **RTK** Recessed drywall kit will be added to all 4 sides of the fixture. Choose this option for standalone fixtures. **RTK2** Recessed drywall kit will be added to the 2 long (length) of the fixture. Choose this option for the fixtures in the middle. **RTK3** Recessed drywall kit will be added to the 2 long (length) and 1 short (width) of the fixture. Choose this option for the first and last fixtures on a run. **TML** Trimless kit will be added to the 2 long sides of the fixture. The 2 end caps pieces will ship in the box for field install onto the ceiling for plaster. **TB** Recessed T-bar 9/16 or 15/16

1. White finish standard. Other colors are made to order appx. 10-15 working days. Replace "CS" with order code listed on available finishes (page 12).

ALIN2-JOIN
Required bracket to join two fixtures together

SPECIAL SHAPE MODELS

Series	Lens	Shape & Wattage	Light Direction	CCT	Finish [1]	Emergency	Mounting Options
LED-ALIN2 Architectural Linear	**FL** Frosted Lens (Standard) **HC** Honeycomb **AG** Anti-Glare Baffle	**12X12-L-3P25** L-Shape 25/19/13W **12X12-120L-3P25** 120° L-Shape 25/19/13W **12X12-135L-3P25** 135° L-Shape 25/19/13W **24X24-L-3P50** L-Shape 50/38/25W **22x10-T-3P36** T-Shape 36/25/17W **22X22-X-3P50** X-Shape 50/38/25W	**D** Downlight **UD** Downlight & Uplight Controlled Together **DUD** Downlight & Uplight Controlled Separately (View Chart for Lumens/Wattage)	**5CCT** 27/30/35 40/50K	**WH** White **BL** Black **CUSTOM[1]** Custom Color	**(blank)** **EMB** Emergency Backup	**(blank)** **RTK** Recessed drywall kit will be added to all 4 sides of the fixture. Choose this option for standalone fixtures. **RTK2** Recessed drywall kit will be added to the 2 long (length) of the fixture. Choose this option for the fixtures in the middle. **RTK3** Recessed drywall kit will be added to the 2 long (length) and 1 short (width) of the fixture. Choose this option for the first and last fixtures on a run. **TML** Trimless kit will be added to the 2 long sides of the fixture. The 2 end caps pieces will ship in the box for field install onto the ceiling for plaster. **TB** Recessed t-bar 9/16 or 15/16

1. White finish standard. Other colors are made to order appx. 10-15 working days. Replace "CS" with order code listed on available finishes (page 12).

ALIN2-JOIN
Required bracket to join two fixtures together

INSTALLATION ACCESSORIES (REQUIRED)

Suspension Canopy Kits	Suspension Canopy Kits for Emergency Models (6-Wire)	Surface & Wall Brackets	Recessed Brackets White (Field Install)	Recessed Brackets Black (Field Install)	Trimless Brackets White Finish (Field Install)	Up Light Kit (Field Install)	Additional Lens Options (Frosted Lens Standard)
SCK-5-6FT-WH 6' White **SCK-5-6FT-BL** 6' Black **SCK-5-12FT-WH** 12' White **SCK-5-12FT-BL** 12' Black **SCK-5-20FT-WH** 20' White **SCK-5-20FT-BL** 20' Black	**SCK-6-6FT-WH** 6' White **SCK-6-6FT-BL** 6' Black **SCK-6-12FT-WH** 12' White **SCK-6-12FT-BL** 12' Black **SCK-6-20FT-WH** 20' White **SCK-6-20FT-BL** 20' Black	**ALIN2-WM-WH** Wall Mount Brackets. Order 1 set for every 4 feet. White Finish. **ALIN2-WM-BL** Wall Mount Brackets. Order 1 set for every 4 feet. Black Finish. **ALIN2-SM-WH** Surface Mount Bracket. White Finish. **ALIN2-SM-BL** Surface Mount Bracket. Black Finish. **ALIN2-JOIN** Continuous run joiner bracket **ALIN-TG-SM-1516** 15/16 T-Grid Surface Bracket **ALIN-TG-SM-916** 9/16 T-Grid Surface Bracket	**ALIN2-1FT-TRIM-WH** **ALIN2-2FT-TRIM-WH** **ALIN2-3FT-TRIM-WH** **ALIN2-4FT-TRIM-WH** **ALIN2-6FT-TRIM-WH** **ALIN2-8FT-TRIM-WH** **ALIN-TG-RTK** Add this part to your order for t-grid bracket	**ALIN2-1FT-TRIM-BL** **ALIN2-2FT-TRIM-BL** **ALIN2-3FT-TRIM-BL** **ALIN2-4FT-TRIM-BL** **ALIN2-6FT-TRIM-BL** **ALIN2-8FT-TRIM-BL**	**ALIN2-1FT-TRIMLESS** **ALIN2-2FT-TRIMLESS** **ALIN2-3FT-TRIMLESS** **ALIN2-4FT-TRIMLESS** **ALIN2-6FT-TRIMLESS** **ALIN2-8FT-TRIMLESS**	**ALIN2-1FT-UL** 2.5/2/1.25w **ALIN2-2FT-UL** 5/4/2.5w **ALIN2-4FT-UL** 10/8/5w	**ALIN2-1FT-HCB** 1' Honeycomb **ALIN2-1FT-BFL** Baffle Ribbed Anti-Glare **ALIN2-FL-48FT** 48' Frosted Lens Roll **ALIN2-FL-82FT** 82' Frosted Lens Roll

ORDERING GUIDE

MAXIMUM RUN BY FOOT	
POWER SETTING	600W Max
LOWEST	96 Feet
MIDDLE	64 Feet
HIGHEST	48 Feet

WATTAGE BY FOOT		
POWER SETTING	Downlight Only	Downlight & Up Light
LOWEST	5W	6W
MIDDLE	7W	9W
HIGHEST	9.5W	12W

LUMENS CHART BY FOOT

DOWNLIGHT ONLY LUMENS/FT.	
POWER SETTING	DOWNLIGHT
LOWEST	600
MIDDLE	840
HIGHEST	1,200

DOWNLIGHT & UP LIGHT LUMENS/FT.		
POWER SETTING	DOWNLIGHT	UP LIGHT
LOWEST	600	150
MIDDLE	840	240
HIGHEST	1,200	300

LUMENS CHART BY FIXTURE

3P12 MODELS					
DOWNLIGHT ONLY FIXTURE		DOWNLIGHT & UP LIGHT FIXTURE			
DOWNLIGHT		DOWNLIGHT		UP LIGHT	
WATT	LUMENS	WATT	LUMENS	WATT	LUMENS
5	600	5	600	1	120
7	840	7	840	2	240
9.5	1,200	9.5	1,200	2.5	300

3P25 MODELS					
DOWNLIGHT ONLY FIXTURE		DOWNLIGHT & UP LIGHT FIXTURE			
DOWNLIGHT		DOWNLIGHT		UP LIGHT	
WATT	LUMENS	WATT	LUMENS	WATT	LUMENS
10	1,200	10	1,200	3	360
15	1,800	15	1,800	4	480
20	2,400	20	2,400	5	600

3P38 MODELS					
DOWNLIGHT ONLY FIXTURE		DOWNLIGHT & UP LIGHT FIXTURE			
DOWNLIGHT		DOWNLIGHT		UP LIGHT	
WATT	LUMENS	WATT	LUMENS	WATT	LUMENS
15	1,800	15	1,800	3	360
22.5	2,700	22.5	2,700	5.5	720
30	3,600	30	3,600	7.5	900

3P50 MODELS					
DOWNLIGHT ONLY FIXTURE		DOWNLIGHT & UP LIGHT FIXTURE			
DOWNLIGHT		DOWNLIGHT		UP LIGHT	
WATT	LUMENS	WATT	LUMENS	WATT	LUMENS
20	2,400	20	2,400	5	600
30	3,600	30	3,600	8	960
40	4,800	40	4,800	10	1,200

3P75 MODELS					
DOWNLIGHT ONLY FIXTURE		DOWNLIGHT & UP LIGHT FIXTURE			
DOWNLIGHT		DOWNLIGHT		UP LIGHT	
WATT	LUMENS	WATT	LUMENS	WATT	LUMENS
30	3,600	30	3,600	8	600
45	5,400	45	5,400	11	1,320
60	7,200	60	7,200	15	1,200

3P100 MODELS					
DOWNLIGHT ONLY FIXTURE		DOWNLIGHT & UP LIGHT FIXTURE			
DOWNLIGHT		DOWNLIGHT		UP LIGHT	
WATT	LUMENS	WATT	LUMENS	WATT	LUMENS
40	4,800	40	4,800	10	1,200
60	7,200	60	7,200	15	1,800
80	9,600	80	9,600	20	2,400

Lumen based off 4000K. Other CCT: +/- 5%

INSTALLATION METHODS

Suspension Canopy Kits

The suspension kit can be adjusted in length. Finish only applies to the canopy. Cord included will be black on colored finishes unless specified.

White

Black

5-Wire

MODEL #	FINISH [1]
SCK-5-6FT 5-Wire Power Cord	**WH** White **BL** Black **CUSTOM** Custom Color View our RAL Chart
SCK-5-12FT 5-Wire Power Cord	
SCK-5-20FT 5-Wire Power Cord	

6-Wire (For EMB Option)

MODEL #	FINISH [1]
SCK-6-6FT 5-Wire Power Cord	**WH** White **BL** Black **CUSTOM** Custom Color View our RAL Chart
SCK-6-12FT 5-Wire Power Cord	
SCK-6-20FT 5-Wire Power Cord	

Surface Mount

Surface mount kit brackets are available for purchase. Use it to easily surface mount your fixtures into the ceiling.

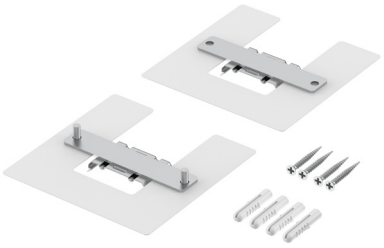

White

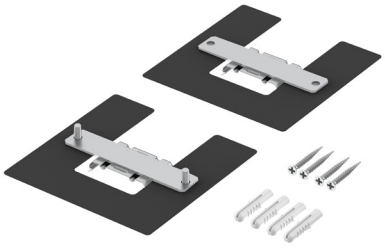

Black

MODEL #	FINISH [1]
ALIN2-SM	**WH** White **BL** Black **CUSTOM** Custom Color View our RAL Chart

Specs and model numbers are subject to change with or without notice

INSTALLATION METHODS

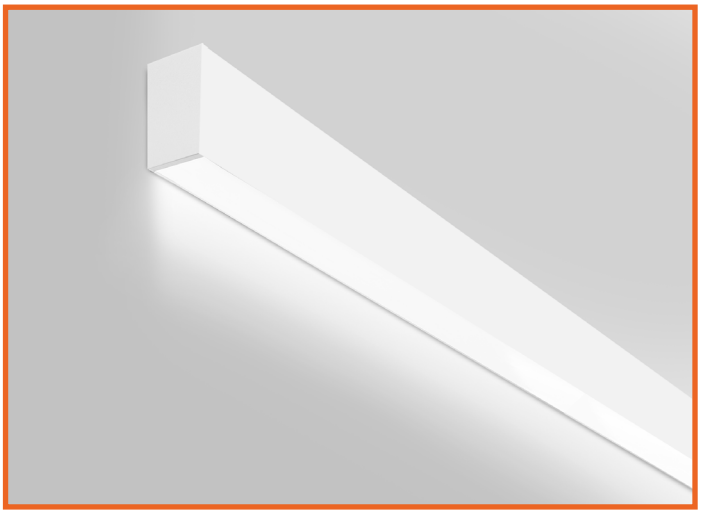

MODEL #	FINISH [1]
ALIN-WM	**WH** White **BL** Black **CUSTOM** Custom Color View our RAL Chart

Wall Mount (Field Install Only)

Wall mounting brackets are available for field install. 2 brackets will be included per order. Wall mount will include a 4.5' power cord to install into the wall j-box.

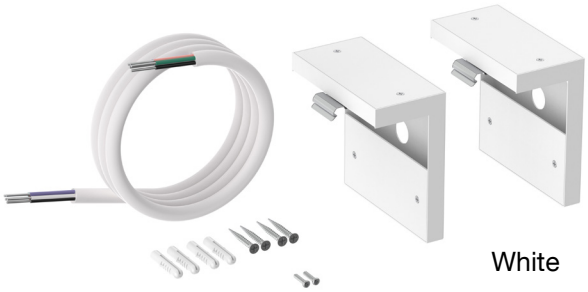

White

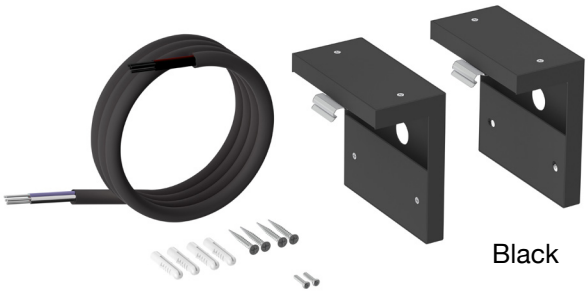

Black

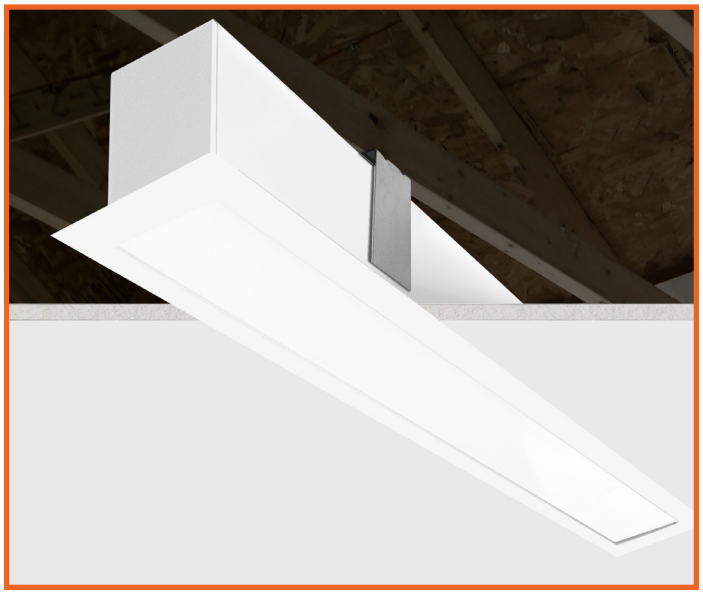

Recessed Drywall Flange Kit (Factory or Field Install)

Drywall recessed flange kit may be installed in the field or the factory. Field install is only available for the straight linear models. Special shapes must be installed at the factory level. Bracket will allow for recessed flush installation into drywall or other hard ceiling applications. Specify on your order:

-RTK: Trim will be installed to all 4 corners of the fixture. Ideal for stand-alone fixtures.

-RTK2: Trim will be installed to the 2 long (length) sides of the fixture. Ideal for middle fixtures in a continuous run.

-RTK3: Trim will be installed to the 2 long (length) and 1 short (width) of the fixture. Ideal for the start or end of a continuous run. Recessed bracket will be included with each fixture.

For field install, order the following:

FIXTURE MODEL #	RECESSED KIT WHITE MODEL#:	RECESSED KIT BLACK MODEL#:
LED-ALIN2-1FT-3P25	ALIN2-1FT-TRIM-WH	ALIN2-1FT-TRIM-BL
LED-ALIN2-2FT-3P25	ALIN2-2FT-TRIM-WH	ALIN2-2FT-TRIM-BL
LED-ALIN3-3FT-3P38	ALIN2-3FT-TRIM-WH	ALIN2-3FT-TRIM-BL
LED-ALIN2-4FT-3P50	ALIN2-4FT-TRIM-WH	ALIN2-4FT-TRIM-BL
LED-ALIN2-6FT-3P75	ALIN2-6FT-TRIM-WH	ALIN2-6FT-TRIM-BL
LED-ALIN2-8FT-3P100	ALIN2-8FT-TRIM-WH	ALIN2-8FT-TRIM-BL

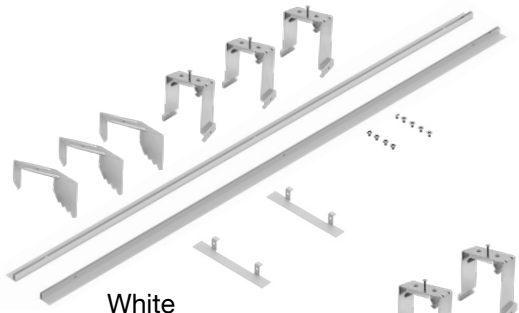

White

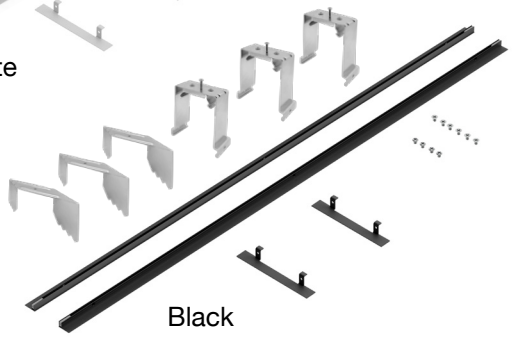

Black

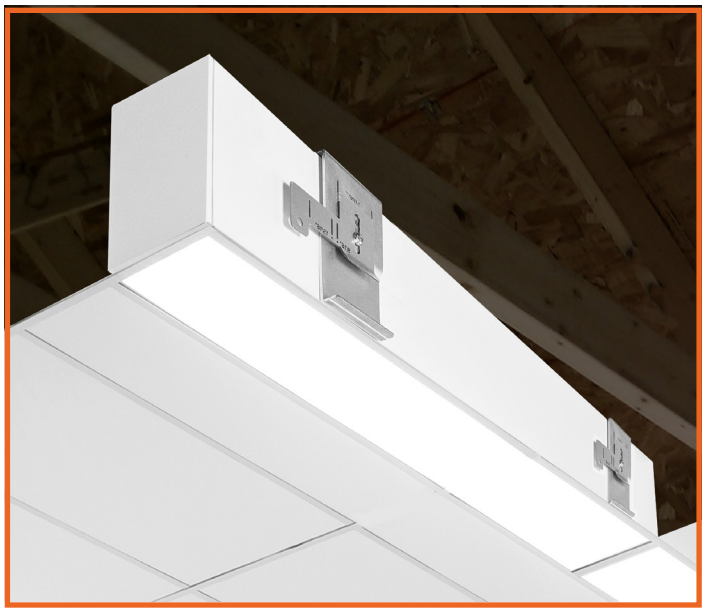

Recessed T-Bar Kit (Factory or Field Install)

Recessed T-bar installation for 9/16 or 15/16 applications may be installed in the field or the factory. Specify on your order:

-TG: T-grid kit will be installed onto the fixture.
For field install, order the following:

FIELD INSTALL MODEL #
ALIN-TG-RTK

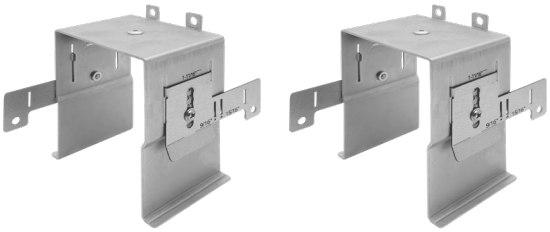

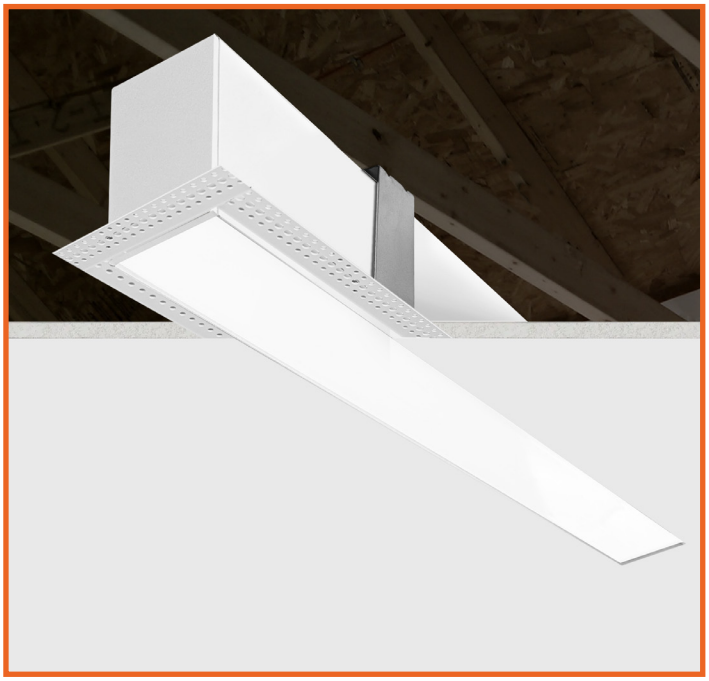

RECESSED TRIMLESS

Trimless Recessed Kit (Factory or Field Install)

Bracket will allow for trimless/mud-in installation. Bracket will add a 1/16” spacing from the lens to allow room for the mud in. Field install is only available for the straight linear models. Special shapes must be installed at the factory level.

Specify on your order:

-TML: Trimless kit will be added to the 2 long sides of the fixture. The 2 end caps pieces will ship in the box for field install onto the ceiling for plaster.

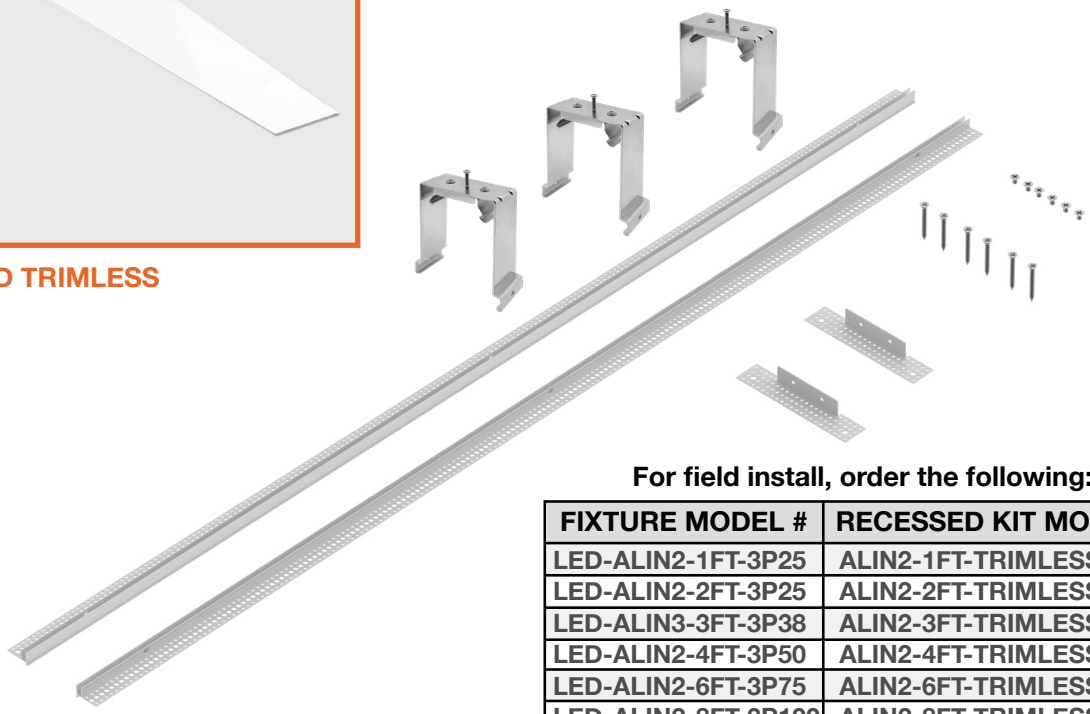

For field install, order the following:

FIXTURE MODEL #	RECESSED KIT MODEL#:
LED-ALIN2-1FT-3P25	ALIN2-1FT-TRIMLESS
LED-ALIN2-2FT-3P25	ALIN2-2FT-TRIMLESS
LED-ALIN3-3FT-3P38	ALIN2-3FT-TRIMLESS
LED-ALIN2-4FT-3P50	ALIN2-4FT-TRIMLESS
LED-ALIN2-6FT-3P75	ALIN2-6FT-TRIMLESS
LED-ALIN2-8FT-3P100	ALIN2-8FT-TRIMLESS

INSTALLATION METHODS

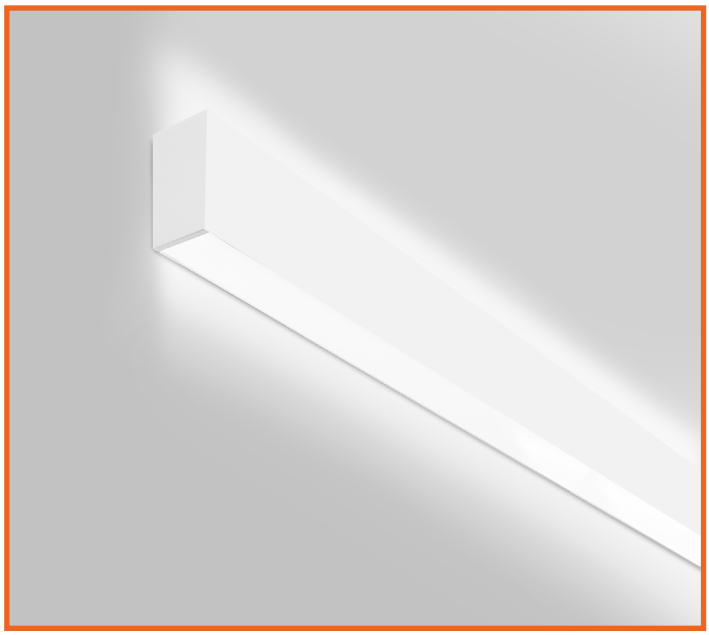

Up Light Kit

Model #'s: ALIN-1FT-UL-5CCT
ALIN2-2FT-UL
ALIN2-4FT-UL

This option can be field installed but is recommended to be factory installed. Ordering guide for field install or stock check:

MODEL #	UP LIGHT MODEL #
LED-ALIN2-1FT-3P25	Qty 1: ALIN2-1FT-UL
LED-ALIN2-2FT-3P25	Qty 1: ALIN2-2FT-UL
LED-ALIN2-3FT-3P38	Qty 1: ALIN2-1FT-UL Qty 1: ALIN2-2FT-UL
LED-ALIN2-4FT-3P50	Qty 1: ALIN2-4FT-UL
LED-ALIN2-6FT-3P75	Qty 1: ALIN2-2FT-UL Qty 1: ALIN2-2FT-UL
LED-ALIN2-8FT-3P100	Qty 2: ALIN2-4FT-UL
LED-ALIN2-FL-12X12-L-3P25	Qty 1: ALIN2-1FT-UL
LED-ALIN2-FL-12X12-120L-3P25	Qty 1: ALIN2-1FT-UL
LED-ALIN2-FL-12X12-135L-3P25	Qty 1: ALIN2-1FT-UL
LED-ALIN2-24X24-L-3P50	Qty 2: ALIN2-2FT-UL
LED-ALIN2-22X10-T-3P36	Qty 2: ALIN2-2FT-UL
LED-ALIN2-22X22-X-3P50	Qty 2: ALIN2-2FT-UL

Top View

T-Grid Surface Mount Brackets for 15/16 or 9/16 T-Bar

Surface mount ALIN fixtures to t-grid.

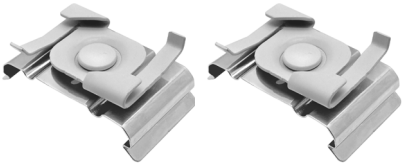

MODEL #
ALIN-TG-SM-1516 T-Grid Surface Mount 15/16
ALIN-TG-SM-916 T-Grid Surface Mount 9/16

Specs and model numbers are subject to change with or without notice

EnVision LED Lighting, Inc.
6023 Bandini Blvd. | Bell, CA 90040 | Tel.: 323-604-0066 | www.envisionledlighting.com

INSTALLATION METHODS

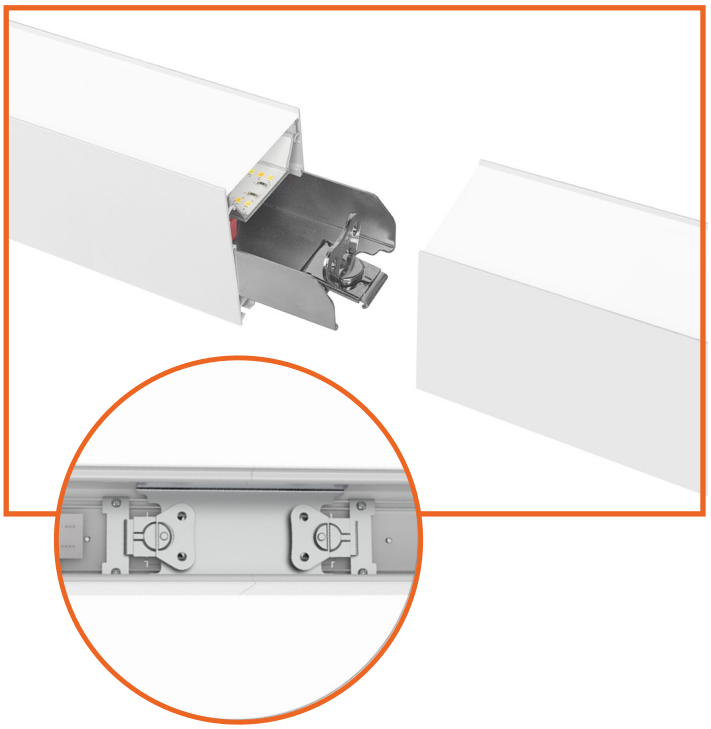

Joining Bracket (Required to Join Two Fixtures Together)

Durable aluminum joiner securely links two fixtures end-to-end.

MODEL #
ALIN2-JOIN Link Two ALIN Fixtures Together

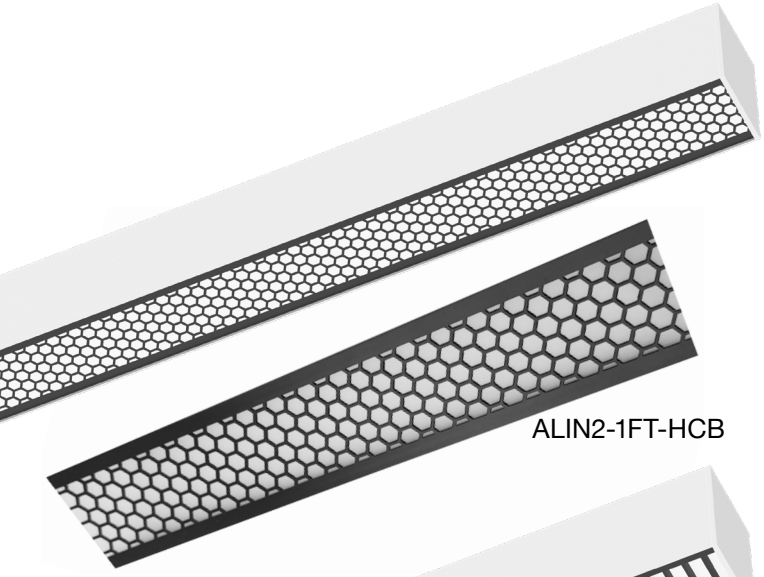

ALIN2-1FT-HCB

Lens Options

Anti-glare optics that increase the shielding angle and limit high-angle luminance, significantly reducing direct-view glare and screen reflections for a more comfortable visual experience.

MODEL #
ALIN2-1FT-HCB 1' Honeycomb Lens

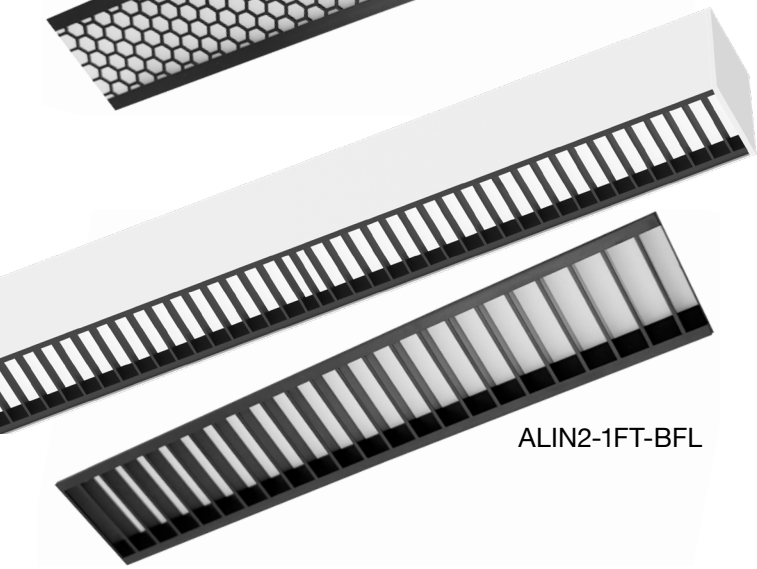

ALIN2-1FT-BFL

MODEL #
ALIN2-1FT-BFL 1' Baffle Anti-Glare Lens

ALIN2-FL-48/82FT

Frosted Lens Roll

The frosted lens diffuses emitted light to reduce visible hot spots. Ideal for residential and commercial lighting installations.

MODEL #
ALIN2-FL-48FT 48' Frosted Lens Roll
ALIN2-FL-82FT 82' Frosted Lens Roll

Specs and model numbers are subject to change with or without notice

Arcy-Line: Architectural Linear Fixtures

5-CCT & 3-Power Selectable

DIMENSIONS

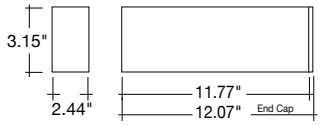

LED-ALIN2-FL-1FT-3P12-D-5CCT-WH

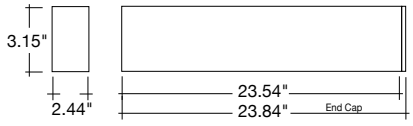

LED-ALIN2-FL-2FT-3P25-D-5CCT-WH

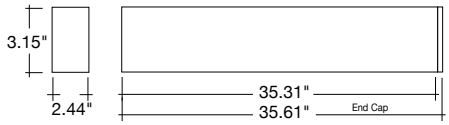

LED-ALIN2-FL-3FT-3P38-D-5CCT-WH

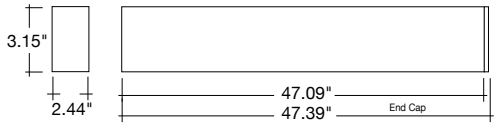

LED-ALIN2-FL-4FT-3P50-D-5CCT-WH

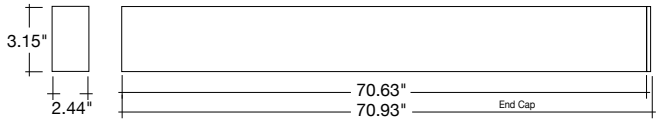

LED-ALIN2-FL-6FT-3P75-D-5CCT-WH

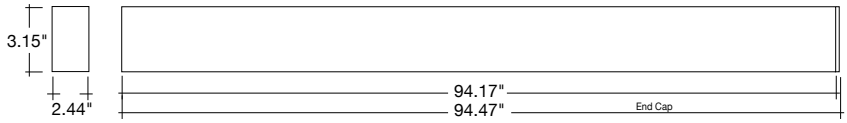

LED-ALIN2-FL-8FT-3P100-D-5CCT-WH

DIMENSIONS

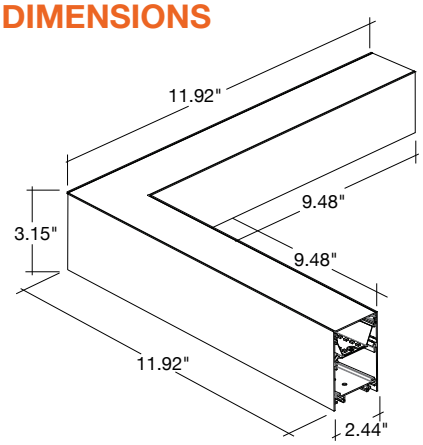

LED-ALIN2-FL-12X12-L-3P25-D-5CCT-WH

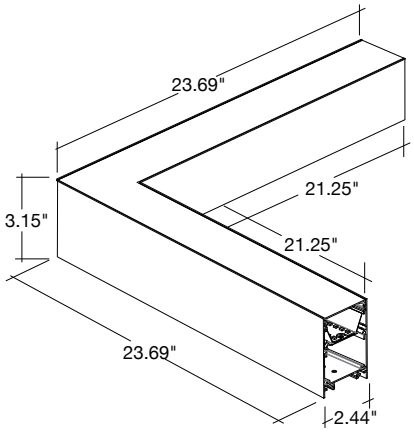

LED-ALIN2-FL-24X24-L-3P50-D-5CCT-WH

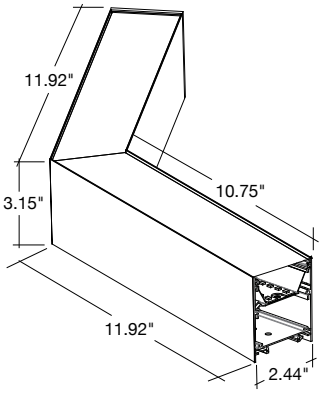

LED-ALIN2-FL-12X12-120L-3P25-D-5CCT-WH

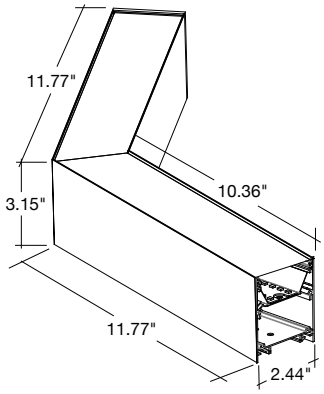

LED-ALIN2-FL-12X12-135L-3P25-D-5CCT-WH

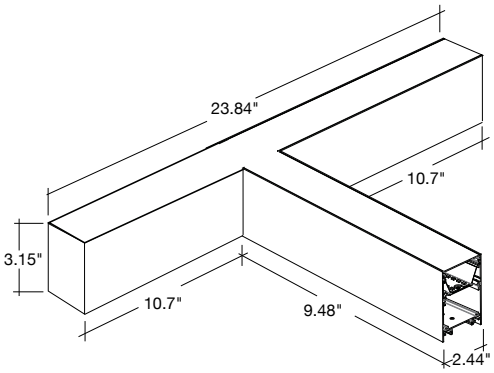

LED-ALIN2-FL-22X10-T-3P50-D-5CCT-WH

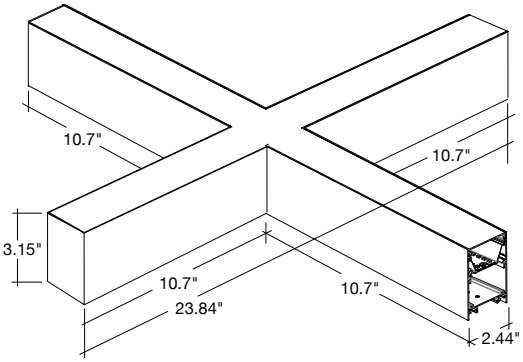

LED-ALIN2-FL-22X22-X-3P50-D-5CCT-WH

Arcy-Line: Architectural Linear Fixtures

5-CCT & 3-Power Selectable

DIMENSIONS

2X2

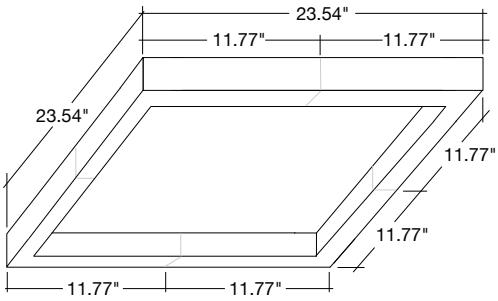

2' X 2' SQUARE	QTY.
LED-ALIN2-FL-12X12-L-3P25-D-5CCT-WH	4

3X3

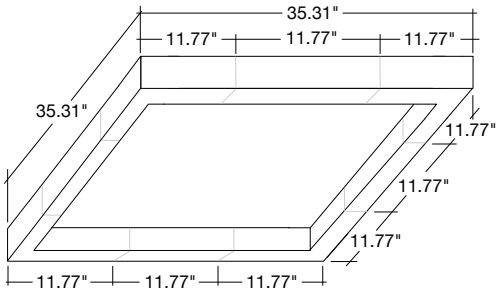

3' X 3' SQUARE	QTY.
LED-ALIN2-FL-12X12-L-3P25-D-5CCT-WH	4
LED-ALIN2-FL-12-I-3P12.5-D-5CCT-WH	4

4X4

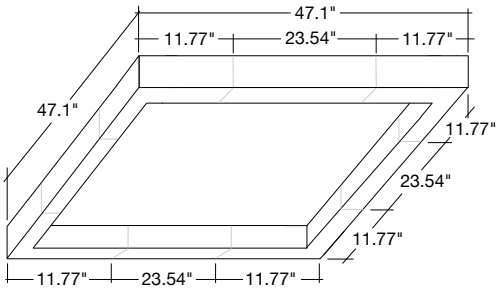

4' X 4' SQUARE	QTY.
LED-ALIN2-FL-12X12-L-3P25-D-5CCT-WH	4
LED-ALIN2-FL-24-I-3P25-D-5CCT-WH	4

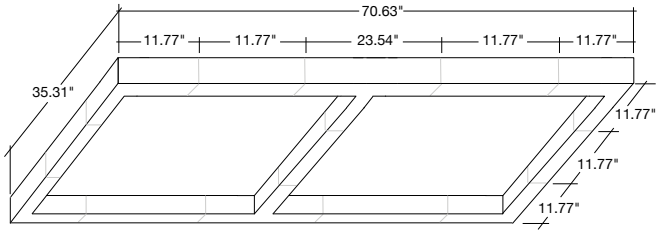

3' X 3' (2) SQUARE	QTY.
LED-ALIN2-FL-12X12-L-3P25-D-5CCT-WH	4
LED-ALIN2-FL-12-I-3P12.5-D-5CCT-WH	6
LED-ALIN2-FL-22X10-T-3P50-D-5CCT-WH	2

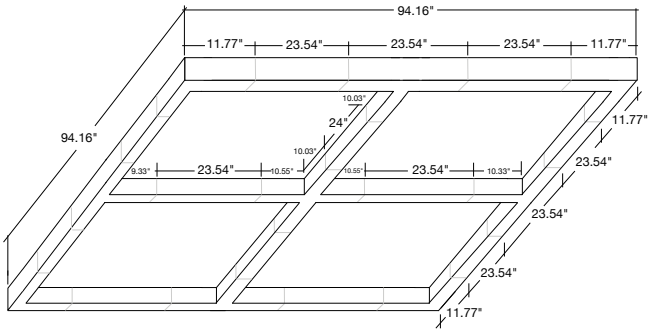

3' X 3' (4) SQUARE	QTY.
LED-ALIN2-FL-12X12-L-3P25-D-5CCT-WH	4
LED-ALIN2-FL-24-I-3P25-D-5CCT-WH	10
LED-ALIN2-FL-22X10-T-3P50-D-5CCT-WH	4
LED-ALIN2-FL-24X24-X-3P50-D-5CCT-WH	1

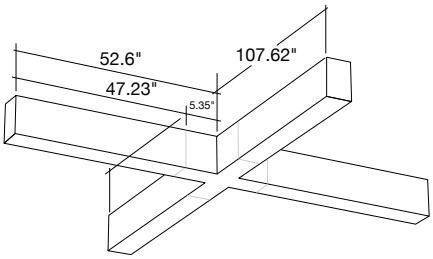

8' X 8' (X SHAPE)	QTY.
LED-ALIN2-FL-48-I-3P50-D-5CCT-WH	4
LED-ALIN2-FL-X-D-5CCT-WH	1

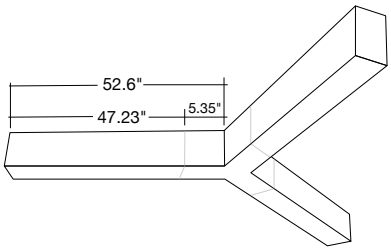

4' X 4' X 4' (Y SHAPE)	QTY.
LED-ALIN2-FL-48-I-3P50-D-5CCT-WH	3
LED-ALIN2-FL-Y-D-5CCT-WH	1

Arcy-Line: Architectural Linear Fixtures

5-CCT & 3-Power Selectable

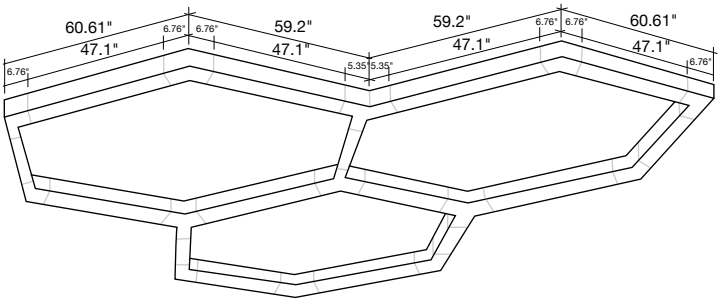

3' X 3' (3) TRIPLE HEXAGON	QTY.
LED-ALIN2-FL-120L-D-5CCT-WH	9
LED-ALIN2-FL-4FT-3P50-D-5CCT-WH	15
LED-ALIN2-FL-Y-D-5CCT-WH	4

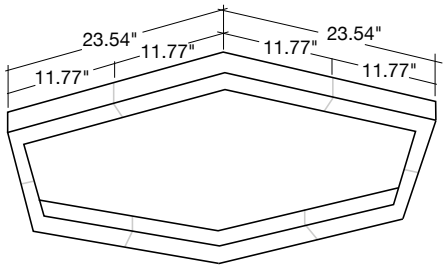

2' HEXAGON	QTY.
LED-ALIN2-FL-12X12-120L-D-5CCT-WH	6

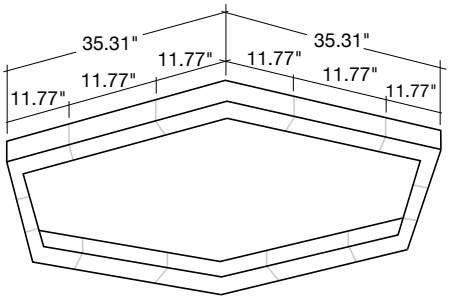

3' HEXAGON	QTY.
LED-ALIN2-FL-12X12-120L-D-5CCT-WH	6
LED-ALIN2-FL-1FT-3P12-D-5CCT-WH	6

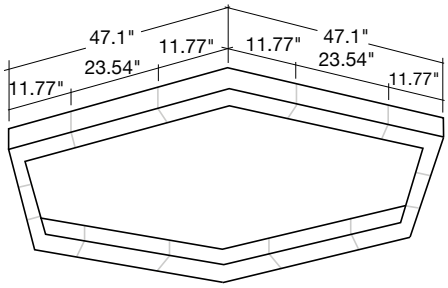

4' HEXAGON	QTY.
LED-ALIN2-FL-12X12-120L-D-5CCT-WH	6
LED-ALIN2-FL-2FT-3P25-D-5CCT-WH	6

Specs and model numbers are subject to change with or without notice

EnVisionLED™
WWW.ENVISIONLEDLIGHTING.COM

Arcy-Line: Architectural Linear Fixtures

5-CCT & 3-Power Selectable

Powder Coat Colors & Finishes: All fixtures are painted standard white RAL#9003.
The below paint RAL# are available for an additional cost per fixture without additional set up fees.
Custom RAL# not listed below are available but may require an additional set up fee.

GLOSS OPTIONS

Statuary Bronze 60 Gloss
T026-BR340
Order Code: GL-BZ-1

RAL 7042 Grey 80 Gloss
T009-GR230
Order Code: GL-GY-1

Silver Metallic 30 Gloss
T353-GR06
Order Code: GL-SL-1

Chrome Metallic 80 Gloss
T358-GR539
Order Code: GL-CH-1

Brass Metallic 30 Gloss
T353-YL02
Order Code: GL-BM-1

Dark Red 90 Gloss
P009-RD02
Order Code: GL-RD-1

Red 90 Gloss
T009-RD01
Order Code: GL-RD-2

Dark Yellow 90 Gloss
T009-YL71
Order Code: GL-YL-1

Yellow 90 Gloss
T009-YL01
Order Code: GL-YL-2

Terra Brown 90 Gloss
(RAL8028) • C209-BR358
Order Code: GL-BR-1

Traffic Green 70 Gloss
T007-GN16
Order Code: GL-GR-1

DOT Green 70 Gloss
FS14066 • T007-GN13
Order Code: GL-GR-2

Green 60 Gloss
C006-GN03
Order Code: GL-GR-3

Blue 90 Gloss
T009-BL01
Order Code: GL-BU-1

Light Blue 90 Gloss
T009-BL05
Order Code: GL-BU-2

Dark Blue 80 Gloss
T008-BL20
Order Code: GL-BU-3

Designer Beige 90 Gloss
T009-BG16
Order Code: GL-BG-1

Black 10 Semi-Gloss
T001-BK120
Order Code: SGL-BL-1

HAMMER OPTIONS

Black Hammer
T013-BK62
Order Code: HM-BL-1

Black Hammer Low Gloss
E311-BK04
Order Code: HM-BL-2

White Hammer
T013-WH09
Order Code: HM-WH-1

Red Hammer
T013-RD15
Order Code: HM-RD-1

HAMMERTONE OPTIONS

Bronze Hammertone
T064-BR24
Order Code: HT-BZ-1

Silver Hammertone
T064-GR05
Order Code: HT-SL-1

Blue Hammertone
T064-BL95
Order Code: HT-BU-1

Green Hammertone
T064-GN81
Order Code: HT-GR-1

VEIN OPTIONS

Copper Vein
T375-BK07
Order Code: VN-CP-1

Gold Vein
T375-BK10
Order Code: VN-GD-1

TEXTURE OPTIONS

FS 25109 Blue Texture
T032-BL04
Order Code: TX-BU-1

White Texture
T032-WH15
Order Code: TX-WH-1

Oil Rubbed Bronze Texture
T291-BR251
Order Code: TX-BZ-1

Mock Rock Texture
T091-GR309
Order Code: TX-GY-1