BOB-04

DANTE INTERFACES

Dante/AES67 Digital Audio Interface BOB 0x4

Dante® AES67

USER MANUAL

TABLE OF CONTENTS

1. PRECAUTIONS 3

1.1 Important Notice 3

1.2 Key Safety Directions 4

1.3 Cleaning Directions 4

2. WARRANTY & ENVIRONMENT 5

3. PACKAGE CONTENTS 5

4. DESCRIPTION & FEATURES 6

4.1 Main Features 6

5. INSTALL & CONNECT 7

5.1 Installation 7

5.1.1 Half Rack Adapter Assembly 7

5.2 Connections 8

5.2.1 Audio output connections 8

5.2.2 Ethernet / Dante/AES67 port 8

6. START-UP & OPERATION 9

7. NETWORK CONFIGURATION AND DANTE/AES67 ROUTING 10

8. PANEL FUNCTIONS 12

8.1 Front Panel 12

8.2 Rear Panel 13

9. TECHNICAL DATA 14

9.1 Technical Specifications 14

9.2 Mechanical Diagram 15

1. PRECAUTIONS

1.1 Important Notice

WARNING: SHOCK HAZARD - DO NOT OPEN

AVIS: RISQUE DE CHOC ÉLECTRIQUE - NE PAS OUVRIR

The flashing light with an arrowhead symbol inside an equilateral triangle on it is intended to alert the user of the presence of non-insulated "dangerous voltage" within the enclosure, which might be of sufficient magnitude to pose a risk of electric shock to users.

The exclamation mark within an equilateral triangle is intended to alert the user of the requirement for important operating and maintenance (servicing), for which instructions may be found in the literature accompanying the appliance.

WARNING (If applicable): Terminals marked with symbol "⚡" may be of sufficient magnitude to pose a risk of electric shock. The external wiring connected to terminals requires installation by a technician, or the use of ready-made leads or cords.

WARNING: To prevent fire or shock hazard, do not expose this equipment to rain or humidity.

WARNING: A device with Class I manufacturing ought to be connected to a mains socket outlet with a protective earthing connection.

WARNING: Ecler products have a long lifetime of more than 10 years. This product must never be discarded as unsorted urban waste, but must be taken to the nearest electrical and electronic waste treatment centre.

This equipment has been tested and found to comply with the limits of a Class A digital device, pursuant to part 15 of the FCC Rules. Such limits are designed to provide reasonable protection against harmful interference when the equipment is operated in a commercial environment. This equipment generates, uses and can radiate radio frequency energy and, if not installed and used in accordance with the instruction manual, may cause harmful interference in radio communications. Operation of this equipment in a residential area might cause harmful interference, in which case, the user will be required to correct the interference at his own expense.

1.2 Key Safety Directions

1. Read the following directions.
2. Keep the following directions.
3. Heed all warnings.
4. Follow all directions.
5. Do not use this device in proximity to water.
6. Clean only with a dry cloth.
7. Do not block any ventilation openings. Install in accordance with the manufacturer's instructions.
8. Do not install near any heat sources such as radiators, heat registers, stoves, or other devices (including amplifiers) that may release heat.
9. Do not defeat the safety purpose of the polarized or grounding type plug. A polarized plug has two blades, being one wider than the other. A grounding type plug has two blades and a third grounding prong. The wide blade or the third prong are provided for your safety. If the provided plug does not fit into your outlet, contact a qualified electrician for a replacement of the obsolete outlet.
10. Protect the power cord from being walked on or pinched, particularly at the plugs, convenience receptacles, and at the point of exit from the device.
11. Only use attachments/accessories specified by the manufacturer.
12. Unplug the device during lightening sorts or when unused for long periods of time.
13. Refer all servicing to qualified personnel. Servicing is required when the device has been damaged in any way, such as power supply cord or plug damage, liquid spillage or objects onto the device, the device has been exposed to rain or humidity, does not operate normally, or has been dropped.
14. Disconnecting from mains: When switching off the POWER switch, all the functions and light indicators of the unit will be stopped, but fully disconnecting the device from mains is done by unplugging the power cable from the mains input socket, therefore, it should always remain easily accessible
15. Equipment is connected to a socket-outlet with an earthing connection by means of a power cord.
16. The marking information is located at the bottom / rear of the unit.
17. The device shall not be exposed to dripping or splashing liquids, and no liquid-filled objects, such as a filled up glass, shall be placed on top of the device.

1.3 Cleaning Directions

Clean the unit with a soft, dry clean cloth or slightly wet with water and neutral liquid soap only, then dry it with a clean cloth. Be careful that water never gets into the unit through any hole. Never use alcohol, benzine, solvents or abrasive substances to clean this unit.

NEEC AUDIO BARCELONA, S.L. accepts no liability for any damage that may be caused to people, animal, or objects due to failure to comply with the warnings above.

2. WARRANTY & ENVIRONMENT

Thank you for choosing our Ecler BOB-04!
We greatly value your trust.

It is **VERY IMPORTANT to carefully read this manual and to fully understand its contents before any connecting takes place** in order to make the best use of this equipment, as well as to get the best performance from it.

To ensure optimal operation of this device, **we strongly recommend that its maintenance be carried out by our authorised Technical Services.**

All ECLER products are covered by warranty, please refer to www.ecler.com or the warranty card included with this product for the period of validity and conditions.

Ecler is truly committed with the environment and planet sustainability, energy saving and CO_2 emission reduction. Recycling materials and using non-contaminant components are also top priorities in our green crusade.

Ecler has deeply evaluated and analyzed the environmental impacts of all the processes involved in the production of this product, including packaging, and has alleviated, reduced and/or compensated for them.

3. PACKAGE CONTENTS

- 1 x BOB-04
- 4 x Rubber Foot
- 4 x Euroblocks connectors
- 1 x Half Rack Front Adapter
- 4 x Washer (use them when mounting the device on a front rack to prevent marks on the device side brackets).
- First Steps Guide
- Warranty card

4. DESCRIPTION & FEATURES

BOB-04 is a digital audio Dante/AES67(Audio Over IP) Break Out Box. It delivers 4 LINE level audio outputs, converted from 4 Dante/AES67 (Audio Over IP), received from the Ethernet digital audio LAN it is connected to.

The device features PoE (Power over Ethernet), DC supply directly from PoE ready Ethernet switches. An optional 24VDC external PSU is available (sold separately).

BOB-04 is a generic Dante/AES67 device that can be used in combination with EclerNet / EclerPLEX / VIDA / HALO Dante devices from Ecler, or with any other third-party Dante/AES67 devices, but it is not a native EclerNet / EclerPLEX guest unit.

4.1 Main Features

- Ethernet interface.
- Euroblock connectors for analogue audio outputs.
- 4 Digital Dante/AES67 channels reception.
- 4 LINE level analogue audio outputs.
- PoE power supply ready.
- Compact format.
- Frontal support Half rack accessory included.

5. INSTALL & CONNECT

5.1 Installation

BOB-04 has been **especially designed to be installed in a standard 19" rack, taking up 1U (height) and only half the width. It includes a half rack adapter which allows two rack width media devices to be mounted on racks of 1 standard unit of measure (19”). Please refer below for the assembly instructions.**

⚠ **Since the device features a heat generator, it should not be enclosed or exposed to extreme temperatures.**

⚠ **If multiple units are installed in the same rack or in a cabinet with closed doors, it is highly recommended to install fans in their upper and lower ends for a forced air flow from the bottom up.** This upward air flow will favour the dissipation of heat generated inside.

5.1.1 Half Rack Adapter Assembly

BOB-04 **includes a half rack front adapter which allows two rack width media devices to be mounted on racks of 1 standard unit of measure (19”).**

1

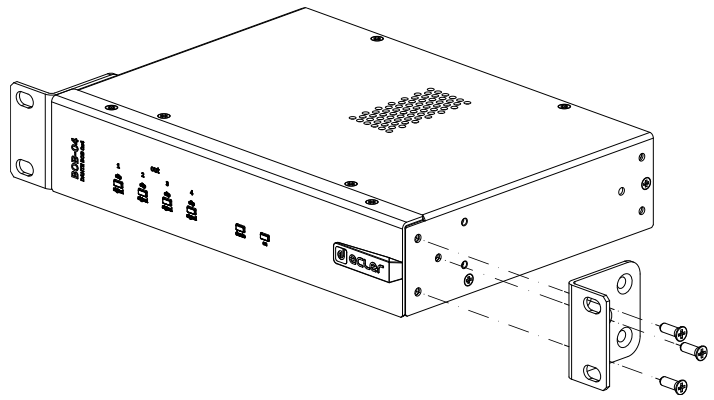

Unscrew the 3 screws of one of the side brackets

2

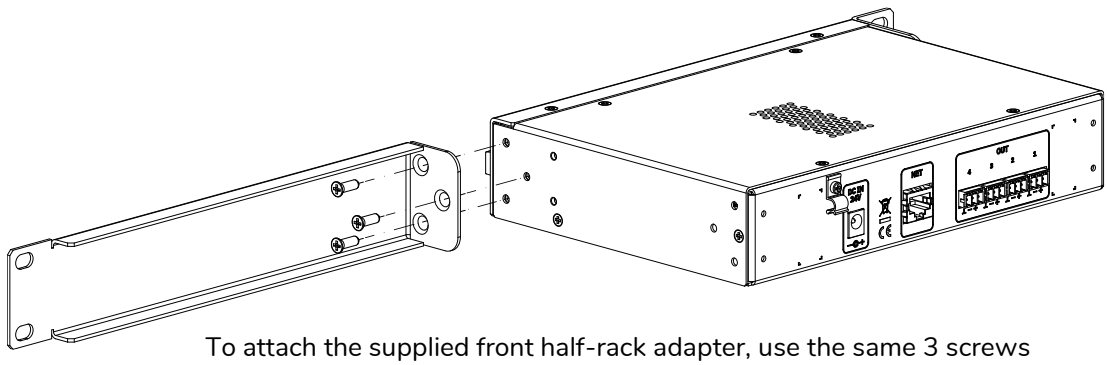

To attach the supplied front half-rack adapter, use the same 3 screws previously removed

5.2 Connections

5.2.1 Audio output connections

BOB-04 **rear panel provides 4 analogue outputs for line-level signals.**

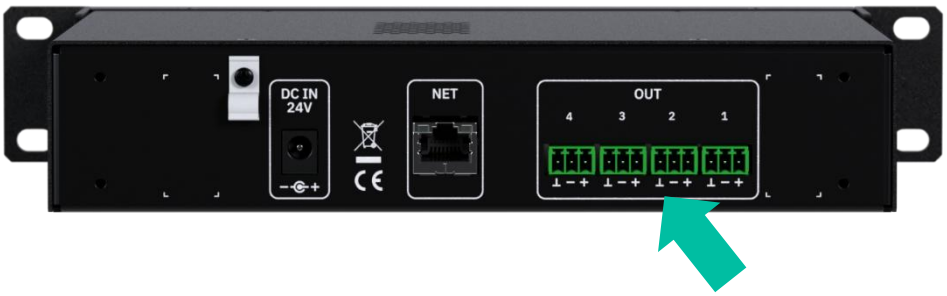

Signal output connectors are 3 position screw terminal block. The wiring is:

Live or direct signal	>	Pin	+
Cold or inverted signal	>	Pin	-
Ground	>	Pin	⊥

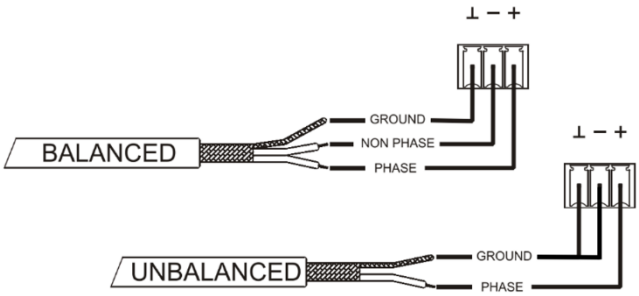

For **unbalanced connection short-circuit pin ⊥ to pin – as reported on the picture.**

5.2.2 Ethernet / Dante/AES67 port

The **RJ-45-type ETHERNET connector on the rear panel, allows the device to be connected to an Ethernet network.**

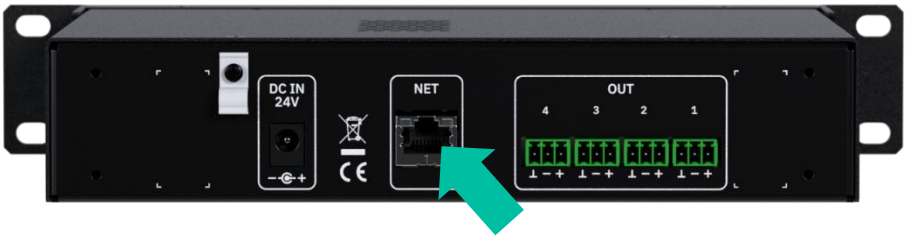

BOB-04 **allows-reception of 4 Dante/AES67 channels.**

For further information on Network Configuration and Dante routing, please refer to the chapter Network Configuration and Dante/AES67 Routing.

6. START-UP & OPERATION

If PoE DC power is unavailable from the Ethernet switch, please connect the optional external PSU (sold separately) to the DC IN connector on the rear panel.

To avoid buzzing, do not allow the power cable to intertwine with audio shielded cables.

The device will automatically switch on and the ON led of the front panel will light up green.

7. NETWORK CONFIGURATION AND DANTE/AES67 ROUTING

The routing of the digital audio signals Dante/ AES67 through the Ethernet network, as well as the network configuration of the ports Dante/ AES67 (IP addresses, mask, etc.) is managed by the software application Dante Controller.

For further information, please refer to the developer's documentation: www.audinate.com

AES67 is enabled by default. Dante devices cannot subscribe to AES67 streams from other Dante devices.

The device **comes from factory with DHCP service activated**. Therefore, **the unit will automatically take a dynamic IP address served by a DHCP server in the local area network** where it is connected to, in case it exists. **However, specific static network parameters can be configured using Dante Controller, accessing to the window shown in this example**:

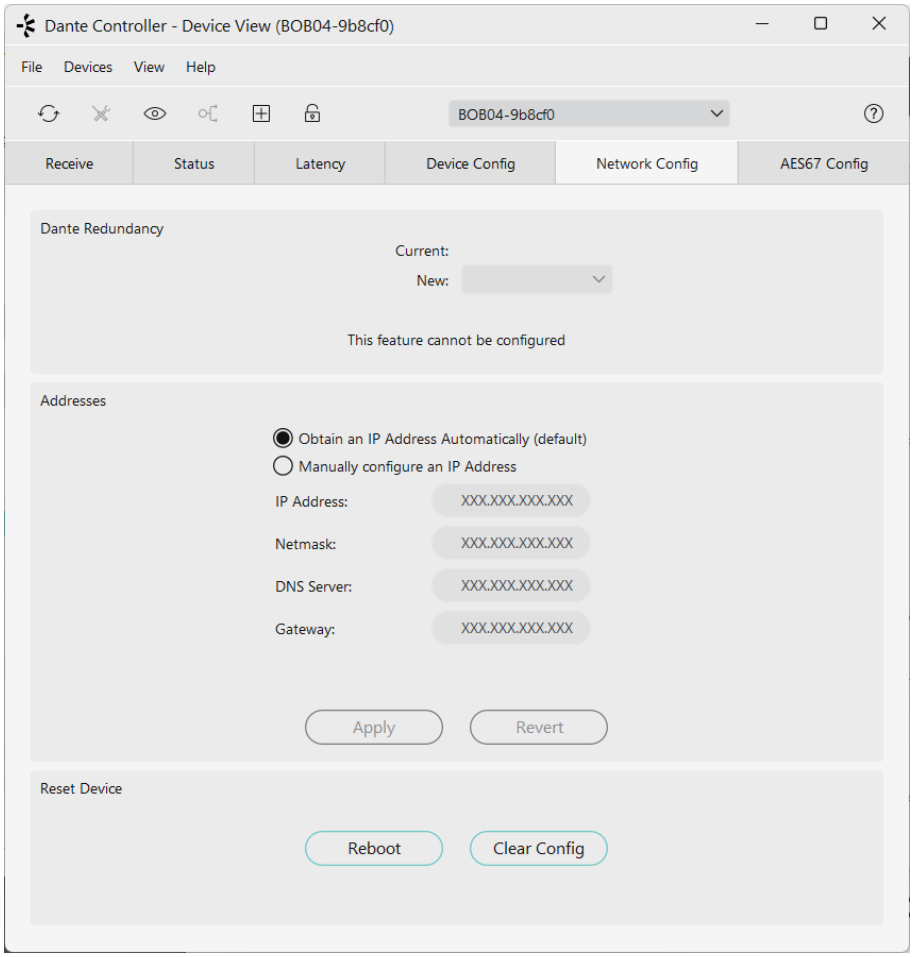

The default unit name, displayed as a label in Dante Controller, is factory-set to BOB-04-nnnnnnnn, where 'nnnnnnnn' matches the last 6 digits of the MAC address of each device. However, **this name can be renamed through following window:**

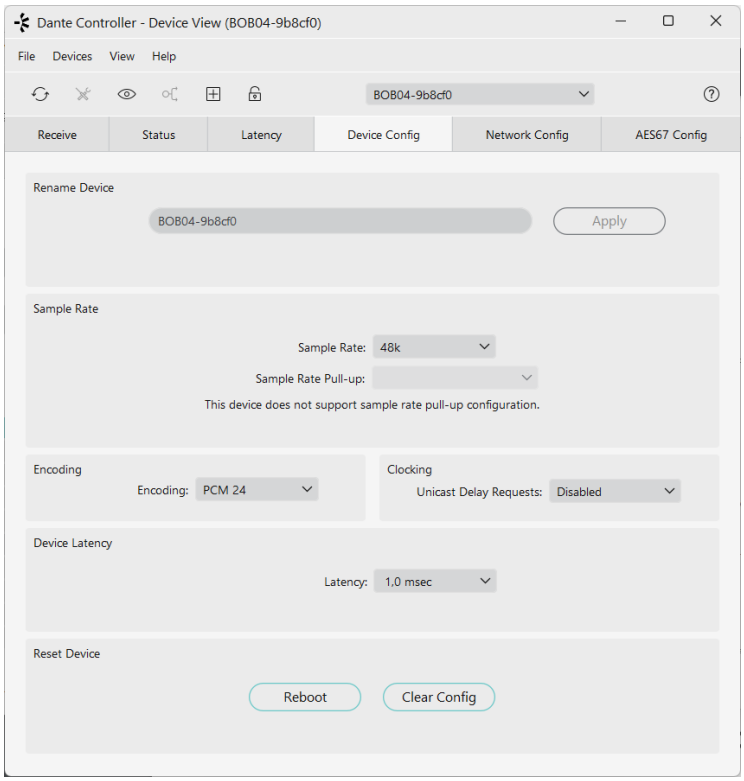

The **routing for Dante/AES67 channel transmitters and receivers can be defined in the routing window**, where all the devices with Dante capabilities detected in the network will also appear:

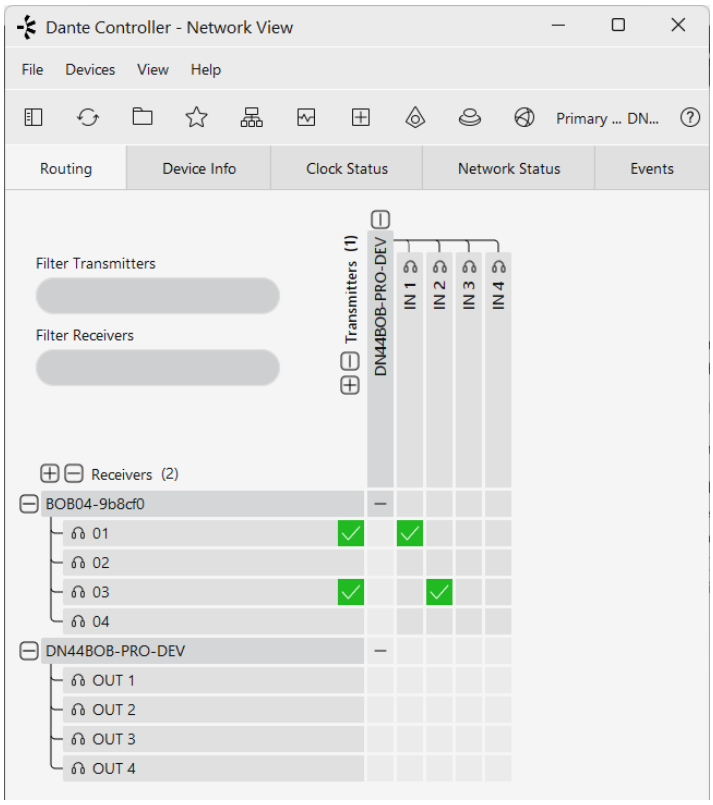

8. PANEL FUNCTIONS

8.1 Front Panel

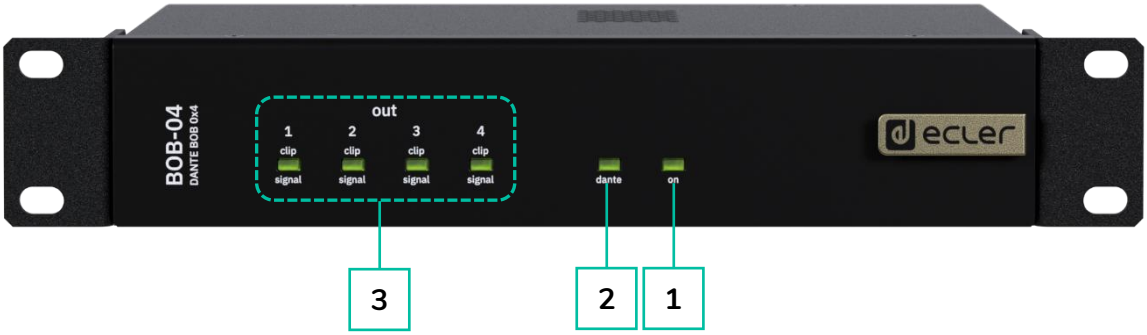

1. **ON,** POWER On led indicator. Lights up when the unit is on.
2. **Dante/AES67LED** indicator:
   - **Red fixed LED :** during the boot up process.
   - **Amber fixed LED**: during the PTP (Precision Time Protocol) network time synchronization.
   - **Green fixed LED**: the unit has been set up as a Dante/AES67 Follower.
   - **Green blinked LED**: the unit has been set up as a Dante/AES67 Leader.
3. **OUTPUTS Clip/signal** indicators x4
   - **Green LED**: SP
   - **Red LED**: Clip

8.2 Rear Panel

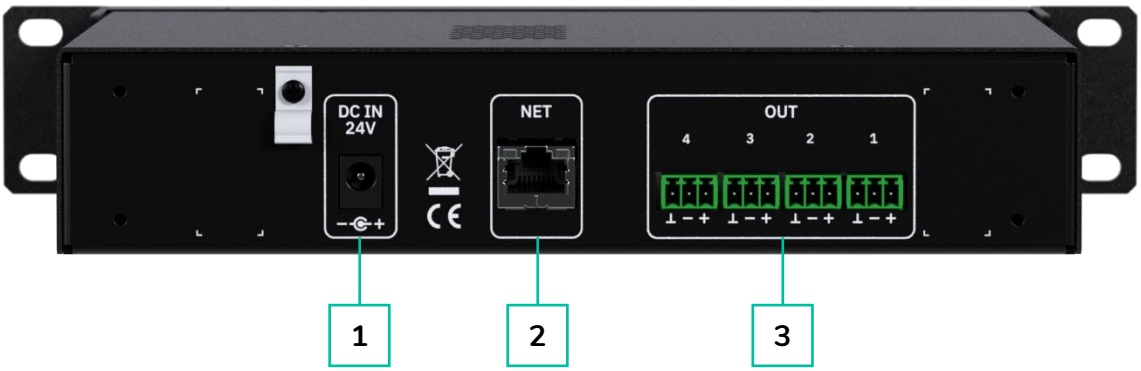

1. **DC** IN socket 24V.
2. **Ethernet/Dante RJ-45 connector.**
3. **OUTPUT Euroblock** connectors x 4.

9. TECHNICAL DATA

9.1 Technical Specifications

BOB-04

Audio Converters	
Sampling rate	48 kHz
Resolution	24 bit
Latency	1 / 2 / 5 ms (selectable)
Frequency response	0 - 20 kHz
Dynamic range	115 dB typ.
Analogue Audio Output Ports	
Number of output ports	4, LINE level
Connection type	Euroblock, 3-pin, balanced
Max output level	+18dBV=+20dBu
Output impedance	316Ω
Crosstalk	better than 95 dB
Audio Over Ip	
Protocols	Dante® / AES67 (2 flows)
Number of digital output ports	4
Interfaces	1 x RJ-45
Connectivity	
Ethernet	1, RJ-45 connector 10 /100Mb, 1GB Auto X-Over
Programming and control	Dante® Controller
Electrical	
Power supply	24VDC External PSU (sold separately)
Secondary power supply	PoE: class 0 802.3af Poe PD compliant
AC mains requirement	90-265VAC @ 50-60Hz (External PSU: 24VDC)
Power consumption	13 VA / 7 W
Ventilation	Passive
Physical	
Operating temperature	Min: -10°C ; 14°F Max: 40°C ; 104°F
Operating humidity	<85% HR
Storage temperature	Min: -10°C ; 14°F Max: 40°C ; 104°F
Storage humidity	<90% HR
Installation options	Desktop, 19" racks (1RU)
Included accessories	4x Euroblock 3-pin connectors, 4x Rubber feet, 1x Frontal Support Half-Rack accessory, 4x Washer.
Dimensions (WxHxD)	266.1 x 44 x 156.2mm / 10.48 x 1.73 x 6.15 in.
Weight	1.1 Kg / 2.43 lb.
Shipping dimensions (WxHxD)	430 x 52 x 261 mm / 16.93 x 2.05 x 10.28 in.
Shipping weight	1.65Kg / 3.64 lb.

9.2 Mechanical Diagram

All measurements are **in mm.**

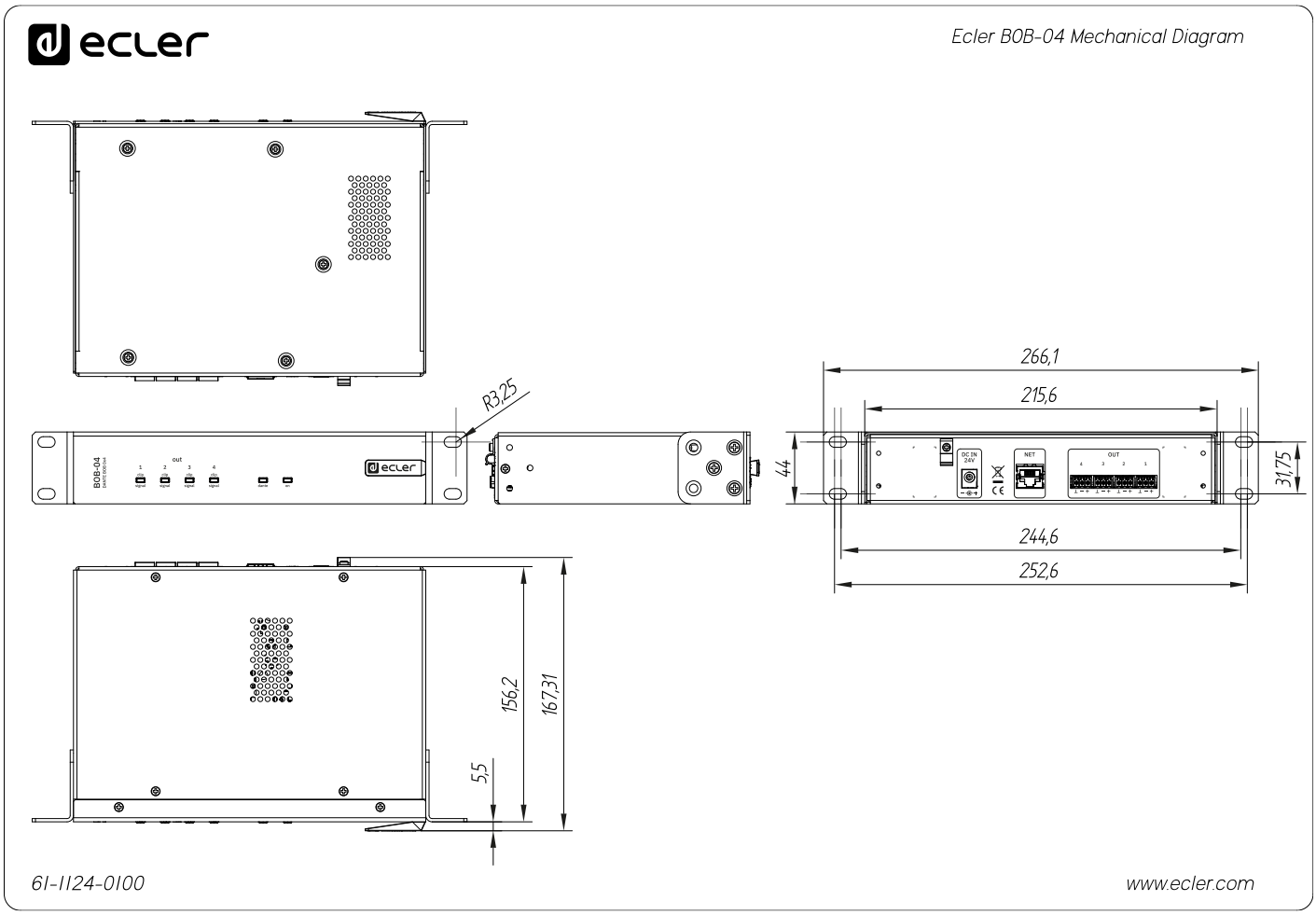

All the measurments are in mm

All product characteristics are subject to variation due to production tolerances. **NEEC AUDIO BARCELONA S.L.** reserves the right to make changes or improvements in the design or manufacturing that may affect these product specifications.

For technical queries contact your supplier, distributor or complete the contact form on our website, in Support / Technical requests.

Motors, 166-168 | 08038 Barcelona, Spain | Tel. (+34) 932238403 | information@ecler.com | www.ecler.com