gamcorp
innovation in design and construction

Gamcorp (Melbourne) Pty Ltd A.C.N 141 076 904 A.B.N 73 015 060 240
www.gamcorp.com.au melbourne@gamcorp.com.au
Suite 4, 346 Ferntree Gully Rd, Notting Hill VIC 3168 Tel: 03 9543 2211 Fax: 03 9543 4046

QAS INTERNATIONAL
ISO 9001:2008
REGISTERED FIRM
Certificate No. AU1222

Our Ref: 25472

1 October 2013

Clenergy Australia
18/20 Duerdin Street
Clayton North VIC 3168

Array Frame Engineering Certificate

Installation of PV-ezRack® SolarRoof on Tin and Tile Roof

Gamcorp (Melbourne) Pty Ltd, being Structural Engineers within the meaning of New Zealand Building Regulations, have carried out a structural design check of PV-ezRack® SolarRoof installation within New Zealand. The design check has been based on the information in the *PV-ezRack SolarRoof_Code Compliant planning and Installation_Guide AV_V2.2* and schematic drawings of the system components by Clenergy (Xiamen) Technology Co. Ltd., provided by Clenergy Australia.

We find the Installation of PV-ezRack® SolarRoof on tin and tile roof to be structurally sufficient for use in New Zealand based on the following conditions:

- Wind Loads to AS/NZ1170.2:2011 Admt 2-2012
- Seismic performance of engineering systems in buildings to NZS 4219-2009
- Wind Region A, A with M_{lee} Multiplier and W
- Wind Terrain Category 2 & 3
- Wind average recurrence interval of 100 years region A and W
- Maximum Building height 20 m
- Max. Solar Panel Dimensions 2000x1000

Refer to attached summary table for interface spacing.

Construction is to be carried out strictly in accordance with the manufacturers instructions. This work was designed in accordance with the provisions of New Zealand Building Regulations and in accordance with sound, widely accepted engineering principles.

Yours faithfully,
Gamcorp (Melbourne) Pty Ltd

Martin Gamble
Managing Director
MAICD

Milan Bjelobrk
MIEAust, CPEng, NPER 2210984,
RPEQ 12090, RBP EC-38461, NT BPB 139671ES

ISO 9001:2008 Registered Firm
Certificate No: AU1222

Gamcorp (Melbourne) Pty Ltd
Consulting Structural & Civil Engineers
A.C.N 141 076 904
A.B.N 73 015 060 240

www.gamcorp.com.au
melbourne@gamcorp.com.au

Suite 4/ 346 Ferntree Gully Rd, Notting Hill VIC 3168. Tel: 03 9543 2211 Fax: 03 9543 4046

Structural Design Documentation

PV-ezRack® SolarRoof Interface Spacing Table According to AS/NZS 1170.2-2011 Amdt 3-2012 Within New Zealand Terrain Category 2

For:

Clenergy Australia

Job Number: 25472
Date: 1 October 2013

COPYRIGHT: The concepts and information contained in this document are the property of Gamcorp (Melbourne) Pty Ltd. Use or copying of this document in whole or in part without the written permission of Gamcorp constitutes an infringement of copyright.

LIMITATION: This report has been prepared on behalf of and for the exclusive use of Gamcorp (Melbourne) Pty Ltd's Client, and is subject to and issued in connection with the provisions of the agreement between Gamcorp (Melbourne) Pty Ltd and its Client. Gamcorp (Melbourne) Pty Ltd accepts no liability or responsibility whatsoever for or in respect of any use of or reliance upon this report by any third party.

Suite 4/ 346 Ferntree Gully Rd
Notting Hill VIC 3168
Tel: 03 9543 2211
Fax: 03 9543 4046
melbourne@gamcorp.com.au
www.gamcorp.com.au

ISO 9001:2008 Registered Firm
Certificate No: AU1222

Job No: **25472**

Client: **Clenergy Australia**

Project: **PV-ezRack® SolarRoof Interface Spacing Table**

Address: **Within New Zealand**

Australian Standards

AS 1170. 2011 – Structural Design Actions
Part 0 – General Principles
Part 1 – Permanent imposed and other actions
Part 2 – Wind Actions
AS 1664.1 – Aluminium structures - Limit state design
NZS 4219 – Seismic performance of engineering systems in buildings

Wind Terrain Category: WTC 2

Designed: **B.C**

Date: **Oct-13**

gamcorp

innovation in design and construction

Client: **Clenergy Australia** Job: **25472**
Project: **PV-ezRack® SolarRoof Interface Spacing Table** Date: **Oct-13**
Address: **Within New Zealand**
Designed: **B.C**

PV-ezRack® SolarRoof Interface spacing Table for Tile Roof

Type of Rail ER-R-ST
Type of Interface ER-I-01
Solar Panel Dimension 2mx1m
Terrain category 2

Roof Angle (Φ) – 5° - 10°

Wind Region	Building Height – H (m)							
	H≤10			10<H≤15			15<H≤20	
	D.W & U.W	**Middle**		**D.W & U.W**	**Middle**		**D.W & U.W**	**Middle**
A	**1265**	**1645**		**1131**	**1596**		**1060**	**1535**
A with M_{lee}	**599**	**847**		**539**	**761**		**508**	**715**
W	**927**	**1334**		**832**	**1191**		**782**	**1116**

Roof Angle (Φ) – 10° - 20°

Wind Region	Building Height – H (m)							
	H≤10			10<H≤15			15<H≤20	
	D.W & U.W	**Middle**		**D.W & U.W**	**Middle**		**D.W & U.W**	**Middle**
A	**961**	**1414**		**862**	**1262**		**810**	**1182**
A with M_{lee}	**463**	**663**		**417**	**597**		**393**	**562**
W	**711**	**1032**		**639**	**625**		**602**	**869**

Roof Angle (Φ) – 20° - 30°

Wind Region	Building Height – H (m)							
	H≤10			10<H≤15			15<H≤20	
	D.W & U.W	**Middle**		**D.W & U.W**	**Middle**		**D.W & U.W**	**Middle**
A	**1045**	**1265**		**936**	**1131**		**879**	**1060**
A with M_{lee}	**501**	**599**		**451**	**539**		**425**	**508**
W	**771**	**927**		**693**	**832**		**652**	**782**

D.W & U.W – Downwind and Upwind refer to note 6.

Roof Angle (Φ) – 30° - 60°

Wind Region	Building Height – H (m)							
	H≤10			10<H≤15			15<H≤20	
	Edge	**Middle**		**Edge**	**Middle**		**Edge**	**Middle**
A	**1151**	**1574**		**1063**	**1464**		**1015**	**1402**
A with M_{lee}	**610**	**923**		**550**	**849**		**518**	**803**
W	**919**	**1279**		**845**	**1184**		**798**	**1131**

Middle and Edge – Please refer to the figure 2 below.

gamcorp

innovation in design and construction

Client: **Clenergy Australia** Job: **25472**
Project: **PV-ezRack® SolarRoof Interface Spacing Table** Date: **Oct-13**
Address: **Within New Zealand**
Designed: **B.C**

PV-ezRack® SolarRoof Interface spacing Table for Tin Roof

Type of Rail ER-R-ST
Type of Interface ER-I-05
Solar Panel Dimension 2mx1m
Terrain category 2

Roof Angle (Φ) – 5° - 10°

Wind Region	Building Height – H (m)							
	H≤10			10<H≤15			15<H≤20	
	D.W & U.W	**Middle**		**D.W & U.W**	**Middle**		**D.W & U.W**	**Middle**
A	**1496**	**1645**		**1454**	**1596**		**1431**	**1570**
A with M_{lee}	**1240**	**1353**		**1208**	**1317**		**1190**	**1297**
W	**1384**	**1515**		**1347**	**1473**		**1326**	**1450**

Roof Angle (Φ) – 10° - 20°

Wind Region	Building Height – H (m)							
	H≤10			10<H≤15			15<H≤20	
	D.W & U.W	**Middle**		**D.W & U.W**	**Middle**		**D.W & U.W**	**Middle**
A	**1396**	**1538**		**1359**	**1495**		**1338**	**1470**
A with M_{lee}	**1163**	**1273**		**1134**	**1240**		**1117**	**1221**
W	**1295**	**1421**		**1261**	**1383**		**1242**	**1361**

Roof Angle (Φ) – 20° - 30°

Wind Region	Building Height – H (m)							
	H≤10			10<H≤15			15<H≤20	
	D.W & U.W	**Middle**		**D.W & U.W**	**Middle**		**D.W & U.W**	**Middle**
A	**1426**	**1496**		**1387**	**1454**		**1365**	**1431**
A with M_{lee}	**1186**	**1240**		**1156**	**1208**		**1139**	**1190**
W	**1321**	**1384**		**1287**	**1347**		**1267**	**1326**

D.W & U.W – Downwind and Upwind refer to note 6.

Roof Angle (Φ) – 30° - 60°

Wind Region	Building Height – H (m)							
	H≤10			10<H≤15			15<H≤20	
	Edge	**Middle**		**Edge**	**Middle**		**Edge**	**Middle**
	Edge	**Middle**		**Edge**	**Middle**		**Edge**	**Middle**
A	**1461**	**1579**		**1432**	**1551**		**1415**	**1535**
A with M_{lee}	**1246**	**1382**		**1214**	**1354**		**1196**	**1335**
W	**1381**	**1500**		**1352**	**1471**		**1333**	**1454**

Middle and Edge – Please refer to the figure 2 below.

gamcorp
innovation in design and construction

Client: **Clenergy Australia** Job: **25472**
Project: **PV-ezRack® SolarRoof Interface Spacing Table** Date: **Oct-13**
Address: **Within New Zealand**
Designed: **B.C**

Snow Load on Solar Panel

N_1 Region: altitude 400 to 1200 m
N_2 Region: altitude 200 to 900 m
N_3 Region: altitude 150 to 900 m
N_4 Region: altitude <400 m
N_4 Region: altitude >=400 m
N_5 Region: altitude < 400m
N_5 Region: altitude >= 400 m

Roof Angle (Φ) – < 15°						
Altitude	Regions					Max Spacing mm
Ho m	N_1 KPA	N_2 KPA	N_3 KPA	N_4 KPA	N_5 KPA	
200	-	0.11	0.12	0.86	0.58	**1500**
400	0.29	0.54	0.6	1.44	0.86	**1500**
700	0.86	1.19	1.32	2.02	1.44	**1500**
900	1.25	1.62	1.8	2.4	1.82	**1500**
1200	1.82			2.98	2.4	**1355**
1500				3.55	2.98	**1240**
1800				4.13	3.55	**1150**

Roof Angle (Φ) – 15° - 30°						
Altitude	Regions					Max Spacing mm
Ho m	N_1 KPA	N_2 KPA	N_3 KPA	N_4 KPA	N_5 KPA	
200	-	0.06	0.06	0.45	0.3	**1500**
400	0.15	0.28	0.32	0.76	0.45	**1500**
700	0.45	0.62	0.69	1.06	0.76	**1500**
900	0.66	0.85	0.95	1.26	0.96	**1500**
1200	0.96			1.56	1.26	**1500**
1500				1.86	1.56	**1500**
1800				2.17	1.86	**1500**

Roof Angle (Φ) – 30° - 45°						
Altitude	Regions					Max Spacing mm
Ho m	N_1 KPA	N_2 KPA	N_3 KPA	N_4 KPA	N_5 KPA	
200	-	0.03	0.03	0.23	0.15	**1500**
400	0.08	0.14	0.16	0.38	0.23	**1500**
700	0.23	0.31	0.35	0.53	0.38	**1500**
900	0.33	0.43	0.47	0.63	0.48	**1500**
1200	0.48			0.78	0.63	**1500**
1500				0.93	0.78	**1500**
1800				1.08	0.93	**1500**

Note: Installation are snow region a lesser value between Snow load spacing and wind load Should be chosen.

gamcorp

innovation in design and construction

Client: **Clenergy Australia** Job: **25472**
Project: **PV-ezRack® SolarRoof Interface Spacing Table** Date: **Oct-13**
Address: **Within New Zealand**
Designed: **B.C**

General Notes

Note 1

Screws minimum embedment length into timber 36 mm

Note 2

Recommended screws

Metal Purlins/Battens	**Fasteners to use**
0.55 mm – 0.75 mm	14g-10 TPI Teks screws (T17s) OR M6 Roof Zips
1.5- 1.9 mm	14g-10 TPI Teks screws OR M6 Roof Zips
2.4 mm and Above	14g-10 TPI Teks screws
Wood purlins and Rafter	**Fasteners to use**
Pine and Hardwood (35mm embedment and above)	M6 (12g) 10 TPI

Note 3

Above Spacing calculated based on 1.9mm steel purlin OR F17 Hardwood
If the supporting members are found to be otherwise, then spacing should be reduced as follows,

Material	**A with M_{lee} Multiplier**		**A and W**	
	Middle	**D.W & U.W**	**Middle**	**D.W & U.W**
0.55 mm steel Batten	45%	56%	28%	38%
0.75 mm steel Batten	7%	23%	5%	15%
1.2 mm Purlin	0%	13%	0%	0%

Note 4

All screw holes must be pre-drilled, before screw is installed
If screw needs to be replaced next size up must be used.

Note 5

Following components are satisfied to use according to AS1170.2011

Components	**Part Number**	**Description**
MT-base Rail	ER-R-MT2560	MT-Rail 2560 mm
Corrugated Adapter	ER-AD-C110	Adapter for corrugated iron roof
Tilt Legs	ER-TL-30	Tilt Legs Kit fixed 30° (front and back leg)
Hanger Bolt	ER-HB-200/WOMP	Hanger Bolt without mounting plate M10 x 200. Fixed to timber purlin only
Roof extender	ER-RE-200	Roof Hook Extender 200mm

Note 6

Terrain category 2 (TC2) refers to open terrain, including grassland, with well-scattered obstructions having heights generally from 1.5 m to 5 m, with no more than two obstruction per obstructions per hectare.

Note 7

For the definition of Downwind, Upwind end and middle,
refer attached figure D9 from AS/NZS 1170.2-2011 Amdt 2-2012.

Note 8

Figure 2: Shows building dimensions (b,h,d)

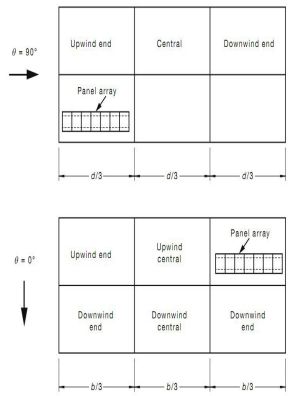

Figure 1

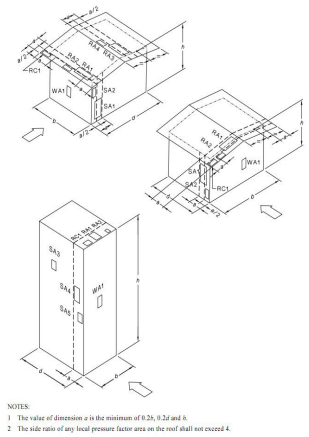

Figure 2

Gamcorp (Melbourne) Pty Ltd
Consulting Structural & Civil Engineers
A.C.N 141 076 904
A.B.N 73 015 060 240

www.gamcorp.com.au
melbourne@gamcorp.com.au

Suite 4/ 346 Ferntree Gully Rd, Notting Hill VIC 3168. Tel: 03 9543 2211 Fax: 03 9543 4046

Structural Design Documentation

PV-ezRack® SolarRoof Interface Spacing Table According to AS/NZS 1170.2-2011 Amdt 3-2012 Within New Zealand Terrain Category 3

For:

Clenergy Australia

Job Number: 25472
Date: 1 October 2013

COPYRIGHT: The concepts and information contained in this document are the property of Gamcorp (Melbourne) Pty Ltd. Use or copying of this document in whole or in part without the written permission of Gamcorp constitutes an infringement of copyright.

LIMITATION: This report has been prepared on behalf of and for the exclusive use of Gamcorp (Melbourne) Pty Ltd's Client, and is subject to and issued in connection with the provisions of the agreement between Gamcorp (Melbourne) Pty Ltd and its Client. Gamcorp (Melbourne) Pty Ltd accepts no liability or responsibility whatsoever for or in respect of any use of or reliance upon this report by any third party.

Suite 4/ 346 Ferntree Gully Rd
Notting Hill VIC 3168
Tel: 03 9543 2211
Fax: 03 9543 4046
melbourne@gamcorp.com.au
www.gamcorp.com.au

ISO 9001:2008 Registered Firm
Certificate No: AU1222

Job No: **25472**

Client: **Clenergy Australia**

Project: **PV-ezRack® SolarRoof Interface Spacing Table**

Address: **Within New Zealand**

Australian Standards

AS 1170. 2011 – Structural Design Actions
Part 0 – General Principles
Part 1 – Permanent imposed and other actions
Part 2 – Wind Actions
AS 1664.1 – Aluminium structures - Limit state design
NZS 4219 – Seismic performance of engineering systems in buildings

Wind Terrain Category: WTC 3

Designed: **B.C**

Date: **Oct-13**

gamcorp
innovation in design and construction

Client: **Clenergy Australia** Job: **25472**
Project: **PV-ezRack® SolarRoof Interface Spacing Table** Date: **Oct-13**
Address: **Within New Zealand**
Designed: **B.C**

PV-ezRack® SolarRoof Interface spacing Table for Tile Roof

Type of Rail ER-R-ST
Type of Interface ER-I-01
Solar Panel Dimension 2mx1m
Terrain category 3

Roof Angle (Φ) – 5° - 10°

Wind Region	Building Height – H (m)							
	H≤10			10<H≤15			15<H≤20	
	D.W & U.W	**Middle**		**D.W & U.W**	**Middle**		**D.W & U.W**	**Middle**
A	**1673**	**1856**		**1602**	**1771**		**1463**	**1710**
A with Mlee	**900**	**1292**		**771**	**1100**		**684**	**972**
W	**1421**	**1697**		**1208**	**1625**		**1066**	**1544**

Roof Angle (Φ) – 10° - 20°

Wind Region	Building Height – H (m)							
	H≤10			10<H≤15			15<H≤20	
	D.W & U.W	**Middle**		**D.W & U.W**	**Middle**		**D.W & U.W**	**Middle**
A	**1476**	**1724**		**1253**	**1650**		**1105**	**1596**
A with Mlee	**690**	**1001**		**593**	**856**		**528**	**759**
W	**1075**	**1584**		**919**	**1349**		**814**	**1188**

Roof Angle (Φ) – 20° - 30°

Wind Region	Building Height – H (m)							
	H≤10			10<H≤15			15<H≤20	
	D.W & U.W	**Middle**		**D.W & U.W**	**Middle**		**D.W & U.W**	**Middle**
A	**1589**	**1673**		**1366**	**1602**		**1203**	**1463**
A with Mlee	**748**	**900**		**643**	**771**		**571**	**684**
W	**1170**	**1421**		**999**	**1208**		**884**	**1066**

D.W & U.W – Downwind and Upwind refer to note 6.

Roof Angle (Φ) – 30° - 60°

Wind Region	Building Height – H (m)							
	H≤10			10<H≤15			15<H≤20	
	Edge	**Middle**		**Edge**	**Middle**		**Edge**	**Middle**
A	**1536**	**1685**		**1383**	**1646**		**1270**	**1615**
A with Mlee	**898**	**1252**		**787**	**1119**		**698**	**1024**
W	**1246**	**1608**		**1114**	**1528**		**1019**	**1407**

Middle and Edge – Please refer to the figure 2 below.

gamcorp
innovation in design and construction

Client: **Clenergy Australia** Job: **25472**
Project: **PV-ezRack® SolarRoof Interface Spacing Table** Date: **Oct-13**
Address: **Within New Zealand**
Designed: **B.C**

PV-ezRack® SolarRoof Interface spacing Table for Tin Roof

Type of Rail ER-R-ST
Type of Interface ER-I-05
Solar Panel Dimension 2mx1m
Terrain category 3

Roof Angle (Φ) – 5° - 10°

Wind Region	Building Height – H (m)							
	H≤10			10<H≤15			15<H≤20	
	D.W & U.W	**Middle**		**D.W & U.W**	**Middle**		**D.W & U.W**	**Middle**
A	**1673**	**1856**		**1602**	**1771**		**1551**	**1710**
A with Mlee	**1402**	**1536**		**1348**	**1475**		**1308**	**1429**
W	**1384**	**1515**		**1347**	**1473**		**1326**	**1450**

Roof Angle (Φ) – 10° - 20°

Wind Region	Building Height – H (m)							
	H≤10			10<H≤15			15<H≤20	
	D.W & U.W	**Middle**		**D.W & U.W**	**Middle**		**D.W & U.W**	**Middle**
A	**1554**	**1724**		**1492**	**1650**		**1446**	**1596**
A with Mlee	**1311**	**1440**		**1262**	**1384**		**1226**	**1343**
W	**1295**	**1421**		**1261**	**1383**		**1242**	**1361**

Roof Angle (Φ) – 20° - 30°

Wind Region	Building Height – H (m)							
	H≤10			10<H≤15			15<H≤20	
	D.W & U.W	**Middle**		**D.W & U.W**	**Middle**		**D.W & U.W**	**Middle**
A	**1589**	**1673**		**1525**	**1602**		**1477**	**1551**
A with Mlee	**1338**	**1402**		**1288**	**1348**		**1250**	**1308**
W	**1321**	**1384**		**1287**	**1347**		**1267**	**1326**

D.W & U.W – Downwind and Upwind refer to note 6.

Roof Angle (Φ) – 30° - 60°

Wind Region	Building Height – H (m)							
	H≤10			10<H≤15			15<H≤20	
	Edge	**Middle**		**Edge**	**Middle**		**Edge**	**Middle**
	Edge	**Middle**		**Edge**	**Middle**		**Edge**	**Middle**
A	**1570**	**1579**		**1529**	**1551**		**1497**	**1535**
A with Mlee	**1373**	**1382**		**1328**	**1354**		**1289**	**1335**
W	**1490**	**1500**		**1449**	**1471**		**1417**	**1454**

Middle and Edge – Please refer to the figure 2 below.

gamcorp
innovation in design and construction

Client: **Clenergy Australia** Job: **25472**
Project: **PV-ezRack® SolarRoof Interface Spacing Table** Date: **Oct-13**
Address: **Within New Zealand**
Designed: **B.C**

Snow Load on Solar Panel

N_1 Region: altitude 400 to 1200 m
N_2 Region: altitude 200 to 900 m
N_3 Region: altitude 150 to 900 m
N_4 Region: altitude <400 m
N_4 Region: altitude >=400 m
N_5 Region: altitude < 400m
N_5 Region: altitude >= 400 m

Roof Angle (Φ) – < 15°						
Altitude	Regions					Max Spacing mm
Ho m	N_1 KPA	N_2 KPA	N_3 KPA	N_4 KPA	N_5 KPA	
200	-	0.11	0.12	0.86	0.58	**1500**
400	0.29	0.54	0.6	1.44	0.86	**1500**
700	0.86	1.19	1.32	2.02	1.44	**1500**
900	1.25	1.62	1.8	2.4	1.82	**1500**
1200	1.82			2.98	2.4	**1355**
1500				3.55	2.98	**1240**
1800				4.13	3.55	**1150**

Roof Angle (Φ) – 15° - 30°						
Altitude	Regions					Max Spacing mm
Ho m	N_1 KPA	N_2 KPA	N_3 KPA	N_4 KPA	N_5 KPA	
200	-	0.06	0.06	0.45	0.3	**1500**
400	0.15	0.28	0.32	0.76	0.45	**1500**
700	0.45	0.62	0.69	1.06	0.76	**1500**
900	0.66	0.85	0.95	1.26	0.96	**1500**
1200	0.96			1.56	1.26	**1500**
1500				1.86	1.56	**1500**
1800				2.17	1.86	**1500**

Roof Angle (Φ) – 30° - 45°						
Altitude	Regions					Max Spacing mm
Ho m	N_1 KPA	N_2 KPA	N_3 KPA	N_4 KPA	N_5 KPA	
200	-	0.03	0.03	0.23	0.15	**1500**
400	0.08	0.14	0.16	0.38	0.23	**1500**
700	0.23	0.31	0.35	0.53	0.38	**1500**
900	0.33	0.43	0.47	0.63	0.48	**1500**
1200	0.48			0.78	0.63	**1500**
1500				0.93	0.78	**1500**
1800				1.08	0.93	**1500**

Note: Installation are snow region a lesser value between Snow load spacing and wind load Should be chosen.

gamcorp

innovation in design and construction

Client: **Clenergy Australia** Job: **25472**

Project: **PV-ezRack® SolarRoof Interface Spacing Table** Date: **Oct-13**

Address: **Within New Zealand**

Designed: **B.C**

General Notes

Note 1

Screws minimum embedment length into timber 36 mm

Note 2

Recommended screws

Metal Purlins/Battens	Fasteners to use
0.55 mm – 0.75 mm	14g-10 TPI Teks screws (T17s) OR M6 Roof Zips
1.5- 1.9 mm	14g-10 TPI Teks screws OR M6 Roof Zips
2.4 mm and Above	14g-10 TPI Teks screws
Wood purlins and Rafter	**Fasteners to use**
Pine and Hardwood (35mm embedment and above)	M6 (12g) 10 TPI

Note 3

Above Spacing calculated based on 1.9mm steel purlin OR F17 Hardwood
If the supporting members are found to be otherwise, then spacing should be reduced as follows,

Material	A with M_{lee} Multiplier		A and W	
	Middle	D.W & U.W	Middle	D.W & U.W
0.55 mm steel Batten	45%	56%	28%	38%
0.75 mm steel Batten	7%	23%	5%	15%
1.2 mm Purlin	0%	13%	0%	0%

Note 4

All screw holes must be pre-drilled, before screw is installed
If screw needs to be replaced next size up must be used.

Note 5

Following components are satisfied to use according to AS1170.2011

Components	Part Number	Description
MT-base Rail	ER-R-MT2560	MT-Rail 2560 mm
Corrugated Adapter	ER-AD-C110	Adapter for corrugated iron roof
Tilt Legs	ER-TL-30	Tilt Legs Kit fixed 30° (front and back leg)
Hanger Bolt	ER-HB-200/WOMP	Hanger Bolt without mounting plate M10x200. Fixed to timber purlin only
Roof extender	ER-RE-200	Roof Hook Extender 200mm

Note 6

Terrain category 3 (TC3) refers numorous closely spaced obstruction having heights generally from 3 to 10 m. eg: Suburban housing or light industrial estates.

Note 7

For the definition of Downwind, Upwind end and middle,
refer attached figure D9 from AS/NZS 1170.2-2011 Amdt 2-2012.

Note 8

Figure 2: Shows building dimensions (b,h,d)

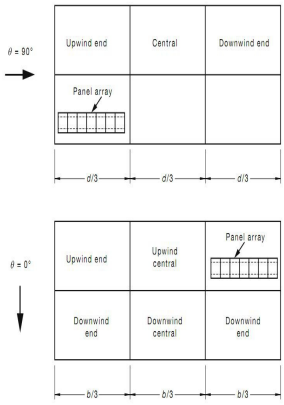

Figure 1

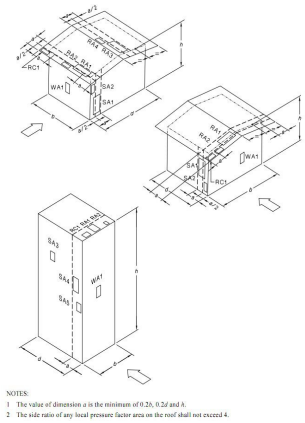

Figure 2