

XT Line

Clamp Solutions for Sanitary Applications

cmatic
www.cmatic.it

The Clamp connection style fitting is a perfect solution for all applications requiring the Cleaning in Place (C.I.P) sanitation procedure. The assembly and disassembly of a Clamp fitting is very easy and does not require the use of any tool.
The fitting is made of Stainless steel only and guarantees a secure, smooth, uniform connection between two surfaces.
Cmatic boasts a long experience in the production of Stainless Steel fittings and couplings suitable for harsh aggressive environments and today is proud to expand the product offer to a new range, the XT Clamp line for Pharma, Biotech, Cosmetics, Food & Beverage, Chemical applications and in general all those market segments, where a high degree of hygiene is requested.
The dimension of the XT Clamp is compliant with the ASME BPE norm.

Clamp Solutions for Sanitary Applications

XT is a unique line of Clamp Fittings including three different types of tube connections: Push-in, Compression style and Push-on. A quick coupling is also available.

Cmatic XT line is designed to perfectly meet Sanitary Applications requirements and needs (especially Food, Pharma, Biotech, and Cosmetics just to name a few). The internal product finishing is SF1 class.

The XT Line is also NSF/ANSI 169 certified.

Same Clamp system, 4 different styles

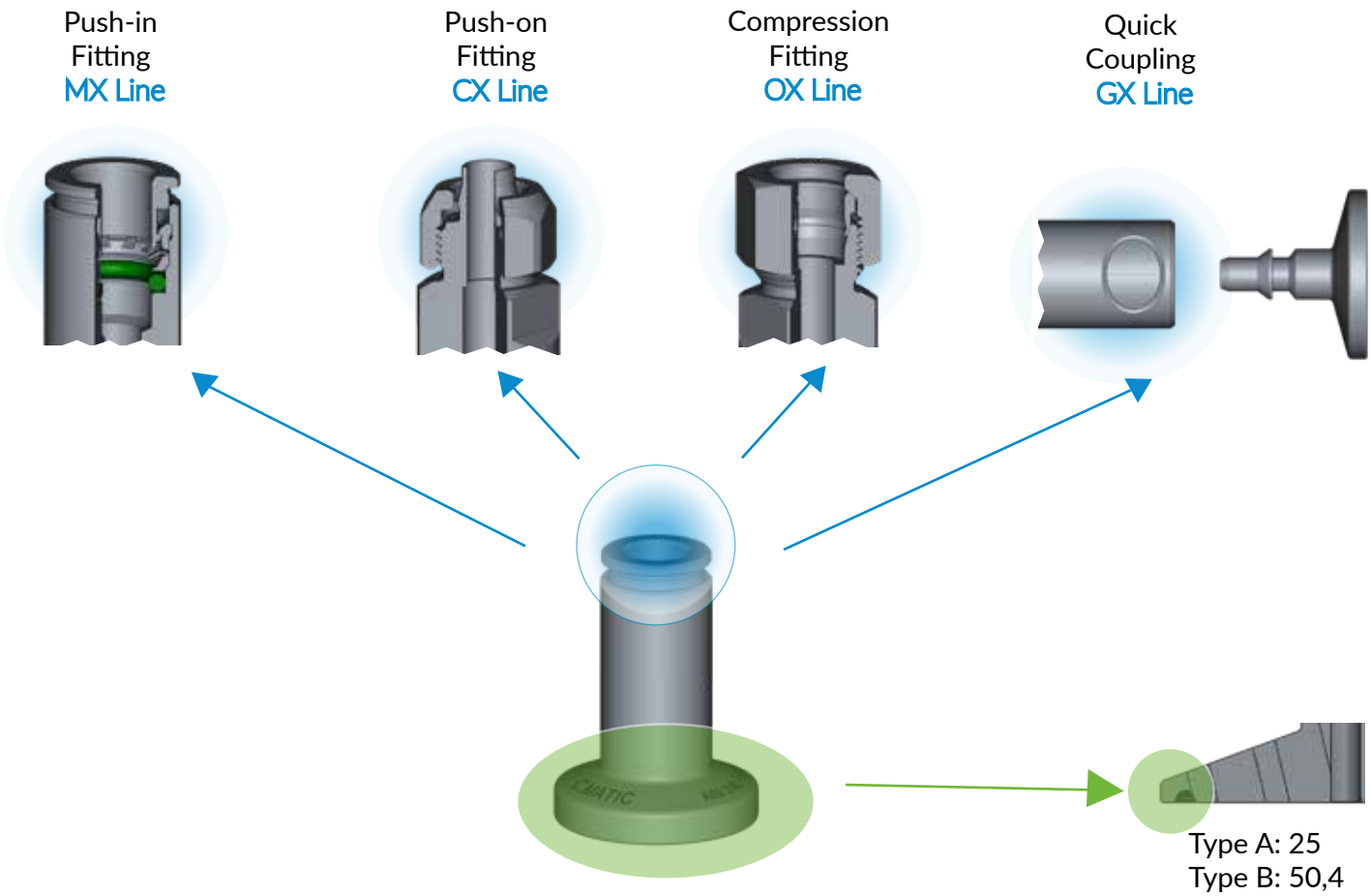

MX 11 XT

Clamp to push-in fitting

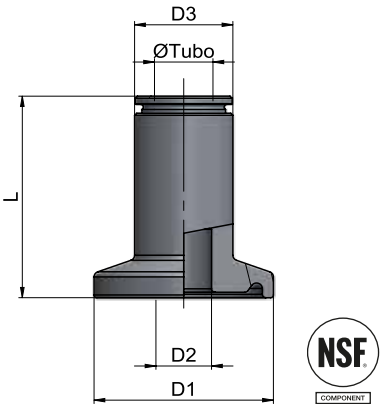



-20°C ÷ +180°C



Max 20 bar



-99 kPa

Type	ØTube	D1	D2	D3	L
MX11 06 XT D25	6	25	4,55	12	29,5
MX11 06 XT D50,4	6	50,4	22,1	12	29,5
MX11 08 XT D25	8	25	7,75	14	30
MX11 08 XT D50,4	8	50,4	22,1	14	30
MX11 10 XT D25	10	25	7,75	16	30
MX11 10 XT D50,4	10	50,4	22,1	16	30

MX 15 XT

Clamp to push-in 90° fitting

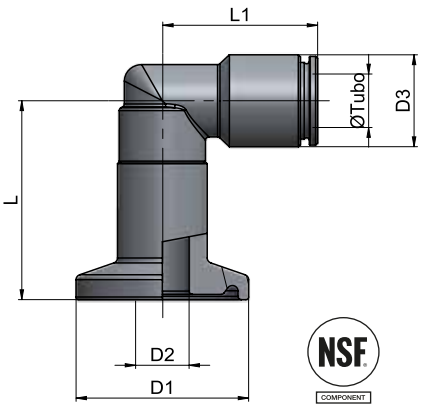



-20°C ÷ +180°C



Max 20 bar



-99 kPa

Type	ØTube	D1	D2	D3	L	L1
MX15 06 XT D25	6	25	7,55	12	29,5	21,5
MX15 06 XT D50,4	6	50,4	22,1	12	29,5	21,5
MX15 08 XT D25	8	25	7,75	14	30	23
MX15 08 XT D50,4	8	50,4	22,1	14	30	23
MX15 10 XT D25	10	25	7,75	16	30	26
MX15 10 XT D50,4	10	50,4	22,1	16	30	26

CX 11 XT

C

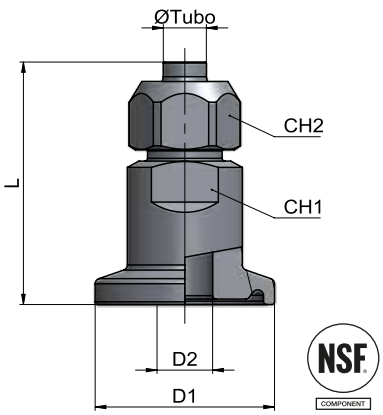



-40°C ÷ +250°C



Max 25 bar



-99 kPa

Type	ØTube	D1	D2	CH1	CH2	L
CX11 06 XT D25	6	25	7,75	12	12	21,5
CX11 06 XT D50,4	6	50,4	22,1	12	12	21,5
CX11 08 XT D25	8	25	7,75	14	13	23
CX11 08 XT D50,4	8	50,4	22,1	14	13	23
CX11 10 XT D25	10	25	7,75	16	16	26
CX11 10 XT D50,4	10	50,4	22,1	16	16	26

OX 11 XT

Clamp to compression fitting

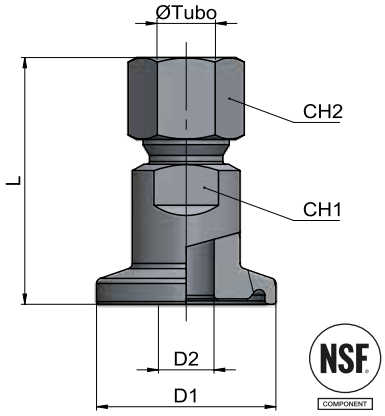



-40°C ÷ +250°C



Max 80 bar

Type	ØTube	D1	D2	CH1	CH2	L
OX11 06 XT D25	6	25	4,55	12	12	35,5
OX11 06 XT D50,4	6	50,4	22,1	12	12	35,5
OX11 08 XT D25	8	25	7,75	12	14	36
OX11 08 XT D50,4	8	50,4	22,1	12	14	36
OX11 10XT D25	10	25	7,75	16	19	40,5
OX11 10 XT D50,4	10	50,4	22,1	16	19	40,5

GX 30 -10 XT

Clamp to quick coupling ISO 6150 C- 8 DN3 profile

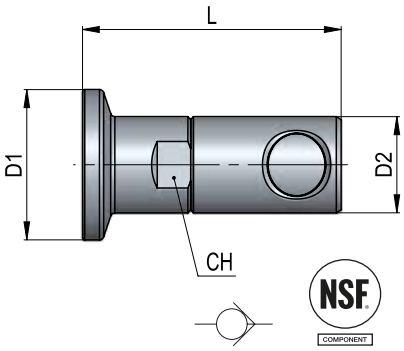



-20°C ÷ +150°C



Max 25 bar



3 mm

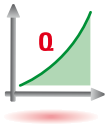

345 N/min
(6 bar Δp =1 bar)

Type	D1	D2	CH	L
GX30-10 00 XT D25	25	16	14	46,4

GX30-20 XT

Clamp to coupling ISO 6150 C- 8 DN3 profile

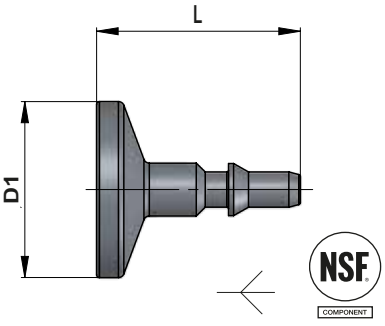



-20°C ÷ +150°C



Max 25 bar



3 mm

Type	D1	L
GX30-20 00 XT D25	25	28,4