BuzziTotem
Product Specification Sheet

This document contains technical information about the BuzziTotem

BUZZI SPACE

www.buzzi.space

Sculptural, freestanding acoustic pillar
Say hello to this playful, freestanding acoustic pillar, available in three models. No matter the model, the soft edges help diffuse sounds while the upholstered acoustic foam body absorbs sound in its entirety. Needless to say, BuzziTotem is one of our peak acoustic performance solutions. Easily fit this standing, architectural element into corners to trap sound waves in offices, residential settings, or hospitality areas.

Design by BuzziSpace Studio

General

- BuzziTotem Wedge | Beam | Cylinder
- Filling: Acoustic foam + Plywood, MDF, Pinewood
- Fabrics: Fabric, Trevira CS+|CS, Revive 1, Clara 2, Remix 3, Velvet, Hero 2, Tonus 4, Memory 2

Acoustics

Absorption

Diffusion

Low tone

Mid tone

High tone

Content

Configurations	3
Components	6
Fabrics	7
Dimensions	10
Acoustics	16

Configurations

BuzziTotem Wedge

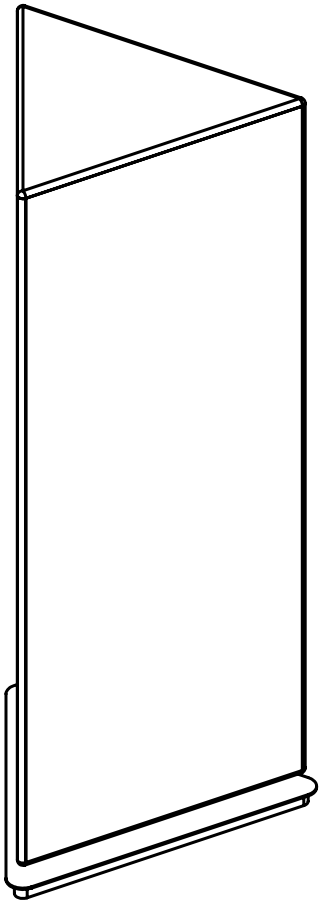

Small | Medium | Large

Filling: Acoustic foam with Plywood, MDF, Pinewood
Baseplate: powder coated metal or Wood with plastic feet

Baseplate

Small:	Height 120 cm	Width 62 cm
	Height 47.24”	Width 24.41”
Medium:	Height 155 cm	Width 62 cm
	Height 61.02”	Width 24.41”
Large:	Height 190 cm	Width 62 cm
	Height 74.80”	Width 24.41”

Wood

Small:	Height 116 cm	Width 55 cm
	Height 45.67”	Width 21.65”
Medium:	Height 151 cm	W 55 cm
	Height 59.45”	Width 21.65”
Large:	Height 186 cm	Width 55 cm
	Height 73.23”	Width 21.65”

Baseplate

Small:	10,5 kg | 23.15 lbs
Medium:	13 kg | 28.66 lbs
Large:	15,5 kg | 34.17 lbs

Wood

Small:	8,5 kg | 18.74 lbs
Medium:	11 kg | 24.25 lbs
Large:	13,5 kg | 29.76 lbs

Fabric, Trevira CS+|CS, Revive 1, Clara 2, Remix 3, Velvet, Hero 2, Tonus 4, Memory 2
Color baseplate: Black (RAL 9005)
Optional wheels for metal baseplate only (3 pcs)

BuzziTotem Beam

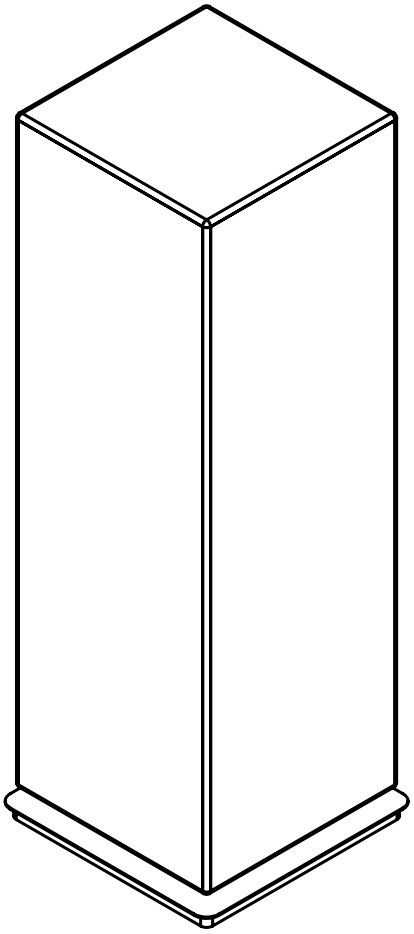

Small | Medium | Large

Filling: Acoustic foam with Plywood, MDF, Pinewood
Baseplate: powder coated metal or Wood with plastic feet

Baseplate

Small:	Height 120 cm	Width 52 cm	Depth 52 cm
	Height 47.24″	Width 20.47″	Depth 20.47″
Medium:	Height 155 cm	Width 52 cm	Depth 52 cm
	Height 61.02″	Width 20.47″	Depth 20.47″
Large:	Height 190 cm	Width 52 cm	Depth 52 cm
	Height 74.80″	Width 20.47″	Depth 20.47″

Wood

Small:	Height 116 cm	Width 46 cm	Depth 46cm
	Height 45.67″	Width 18.11″	Depth 18.11″
Medium:	Height 151 cm	Width 46 cm	Depth 46 cm
	Height 59.45″	Width 18.11″	Depth 18.11″
Large:	Height 186 cm	Width 46 cm	Depth 46 cm
	Height 73.23″	Width 18.11″	Depth 18.11″

Baseplate

Small:	15 kg | 33.06 lbs
Medium:	18,5 kg | 40.78 lbs
Large:	22 kg | 48.50 lbs

Wood

Small:	12 kg | 26.46″
Medium:	15,5 kg | 34.17″
Large:	19 kg | 41.89″

Fabric, Trevira CS+|CS, Revive 1, Clara 2, Remix 3, Velvet, Hero 2, Tonus 4, Memory 2
Color baseplate: Black (RAL 9005)
Optional wheels for metal baseplate only (4 pcs)

BuzziTotem Cylinder

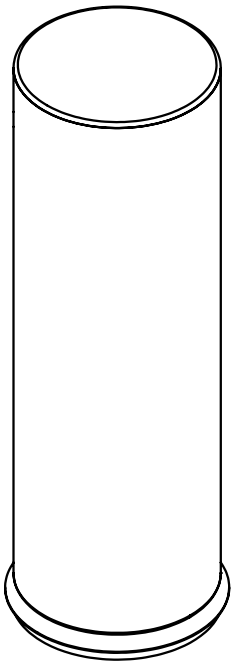

Small | Medium | Large

Filling: Acoustic foam with Plywood, MDF, Pinewood
Baseplate: powder coated metal or Wood with plastic feet

Baseplate

Small:	Height 120 cm	Ø 52 cm
	Height 47.24″	Ø 20.47″
Medium:	Height 155 cm	Ø 52 cm
	Height 61.02″	Ø 20.47″
Large:	Height 190 cm	Ø 52 cm
	Height 74.80″	Ø 20.47″

Wood

Small:	Height 116 cm	Ø 46 cm
	Height 45.67″	Ø 18.11″
Medium:	Height 151 cm	Ø 46 cm
	Height 59.45″	Ø 18.11″
Large:	Height 186 cm	Ø 46 cm
	Height 73.23″	Ø 18.11″

Baseplate

Small: 12 kg | 26.46 lbs
Medium: 15 kg | 33.06 lbs
Large: 18 kg | 39.68 lbs

Wood

Small: 8 kg | 17.64 lbs
Medium: 11 kg | 24.25 lbs
Large: 14 kg | 30.86 lbs

Fabrics: Fabric, Trevira CS+|CS, Revive 1, Clara 2, Remix 3, Velvet, Hero 2, Tonus 4, Memory 2
Color baseplate: Black (RAL 9005)
Optional wheels for metal baseplate only (5 pcs)

Components

Bottom

Baseplate

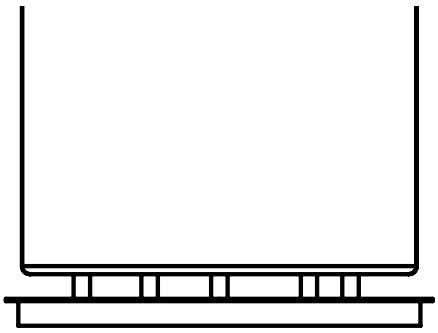

Baseplate powder coated metal
Color baseplate: Black (RAL 9005))

Wood

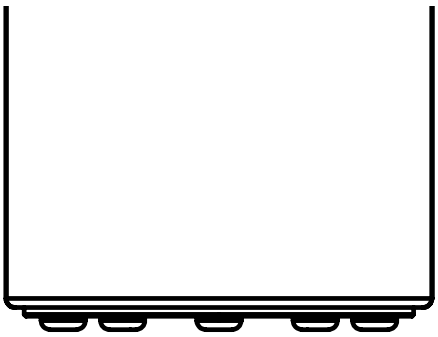

Bottom:
Poplar multiplex
Wedge: 3 plastic feet
Beam: 4 plastic feet
Cylinder: 5 plastic feet

Wheels (optional)

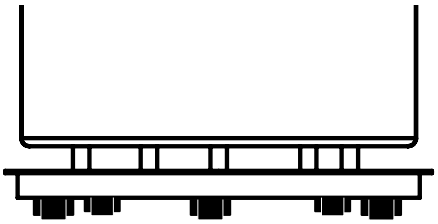

Wheels only in combination with baseplate
Wedge: 3 wheels
Beam: 4 wheels
Cylinder: 5 wheels

Fabrics

Fabric (45 colors)

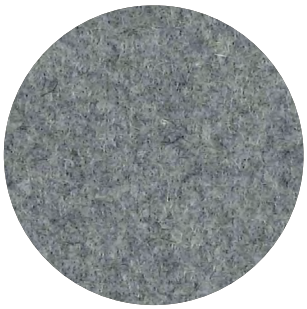

Category A
Composition 70% Recycled Wool, 25% Recycled Polyacryl, 5% Recycled Other Fabrics
Weight 405 g/m² | 11.94 oz/yd²
Abrasion resistance 40.000 Martindale, 50,000 Wyzenbeek
Flammability EU: EN 1021.1/2006 | BS EN 1021.1/2006 (cigarette). EN 1021.2/2006 | BS EN 1021.2/2006 (match)
USA: CAL TB 117 | ASTM E84 CLASS A
Fastness to light EU: 4 | USA 4
Fastness to rubbing EU: Wet 3-4 | Dry 4-5
Fastness to crocking USA: Wet 5 | Dry 5

Trevira CS+| CS (47 colors)

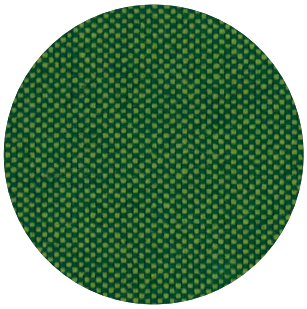

Category A
Weight 420 g/m² | 12.39 oz/yd²
Composition 100% Polyester, Trevira CS
Abrasion resistance 100.000 Martindale, 90,000 Wyzenbeek
Flammability BS 5852 part II: CRIB 5 | BS 7176 Medium Hazard
USA: CAL TB 117 | M1 | B1 | EN 1021/1-2 |C1 | IMO Res. A652 (16)
Fastness to light EU: 6 | USA 5
Fastness to rubbing EU: Wet 4-5 | Dry 4-5
Fastness to crocking USA: Wet 5 | Dry 5

Revive 1 (25 colors)

kvadrat

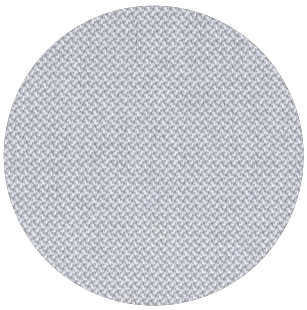

Category A
Composition 100% recycled polyester FR
Weight 430 g/lin.m
Abrasion resistance 60.000 Martindale rubs, EN ISO 12947
Flammability EN 1021-1/2 | DIN 4102 B1 | Önorm B1/Q1
UNI 9175 1IM | US Cal. Tech. Bull. 117
IMO A.652 (16)
Fastness to light Note 5-7, ISO 105-B02
Fastness to rubbing (ISO) dry 5, wet 4-5
Pilling Note 4-5, EN ISO 12945

Velvet (12 colors)

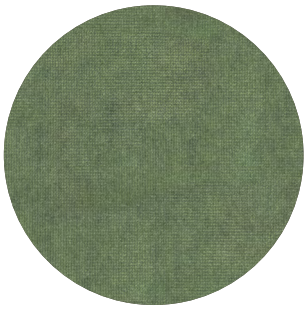

Category B
Composition 100% PES
Weight 375 g/m² | 11.06 oz/yd²
Abrasion resistance > 100.000 Martindale
Fastness to light EU: 4-5
Fastness to rubbing EU: Wet 4 | Dry 4-5
Pilling EU: 4-5

Clara 2 (24 colors)

kvadrat

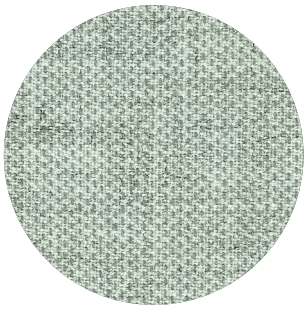

Category B
Composition 92% new wool, 8% nylon
Weight 400 g/lin.m
Abrasion resistance 80.000 Martindale rubs, EN ISO 12947
Flammability EN 1021-1/2 | BS 5852, ignition source 2–3 | DIN 4102 B2
NF D 60 013 | UNI 9175 1IM | US Cal. Tech. Bull. 117, Sec. E
NFPA 260 | IMO A.652(16)
Fastness to light Note 5-7, ISO 105-B02
Fastness to rubbing (ISO) dry 4-5, wet 4
Pilling Note 4, EN ISO 12945

Remix 3 (73 colors)

kvadrat

Category B
Composition 90% new wool, 10% nylon
Weight 415 g/lin.m
Abrasion resistance 100.000 Martindale rubs, EN ISO 12947
Flammability EN 1021-1/2 | BS 5852 part 1
Önorm B1/Q1 | NF D 60 013 | UNI 9175, 1IM
AS/NZS 1530.3 | Cal. Tech. Bull. 117-2013
NFPA 260 | IMO FTP Code 2010:Part 8
Fastness to light Note 5-7, ISO 105-B02
Fastness to rubbing (ISO) dry 4-5, wet 4
Pilling Note 4, EN ISO 12945

Hero 2 (33 colors)

kvadrat

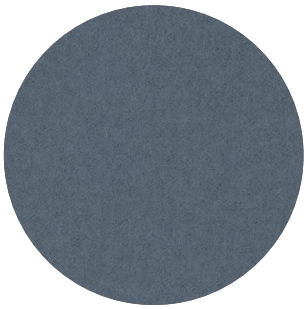

Category C
Composition 97% new wool, 3% nylon
Weight 580 g/lin.m
Abrasion resistance 45.000 Martindale rubs, EN ISO 12947
Flammability EN 1021-1/2 | DIN 4102 B2 | NF D 60 013
UNI 9175 1IM | US Cal. Bull. 117-2013 | NFPA 260
IMO A.652 (16)
Fastness to light Note 5-6, ISO 105-B02
Fastness to rubbing (ISO) dry 4-5, wet 4-5
Pilling Note 3-4, EN ISO 12945

Tonus 4 (47 colors)

kvadrat

Category D
Composition 90% new wool, 10% Helanca
Weight 665 g/lin.m
Abrasion resistance 100.000 Martindale rubs, EN ISO 12947
Flammability EN 1021-1/2 | BS 5852 part 1 | DIN 4102 B2
Önorm B1/Q1 | NF D 60 013 | UNI 9175 1IM
US Cal. Bull. 117-2013 | NFPA 260 | IMO A.652 (16)
Fastness to light Note 5-7, ISO 105-B02
Fastness to rubbing (ISO) dry 3-5, wet 3-5
Pilling Note 3, EN ISO 12945

Memory 2 (20 colors)

kvadrat

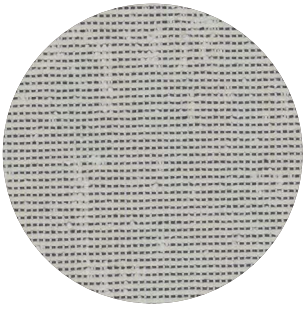

Category E
Composition 100% Trevira CS
Weight 700 g/lin.m
Abrasion resistance
35.000 rubs acc. to the Martindale method, EN ISO 12947
Flammability EN 1021-1/2 | DIN 4102 B1 | Önorm B1/Q1
NF D 60 013 | NF P 92 507 M1 | UNI 9175 1IM
UNI 9177 classe 1 | US Cal. Tech. Bull. 117
IMO A.652 (16)
Fastness to light Note 5-8, ISO 105-B02
Fastness to rubbing (ISO) dry 4-5, wet 4-5
Pilling Note 4, EN ISO 12945

Dimensions

BuzziTotem Wedge Baseplate

Side

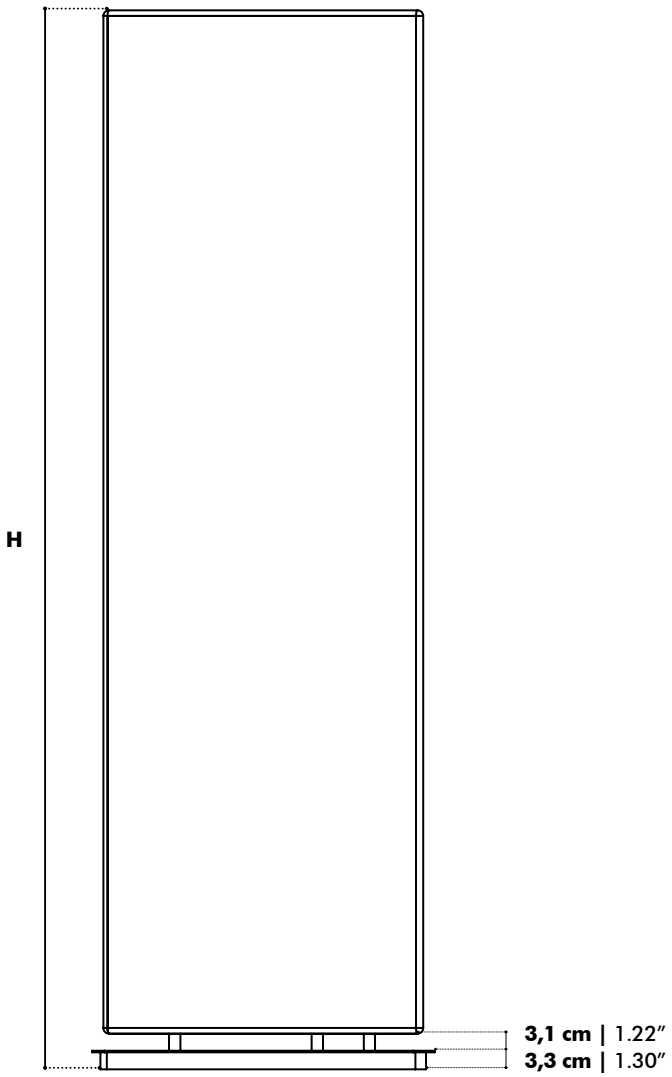

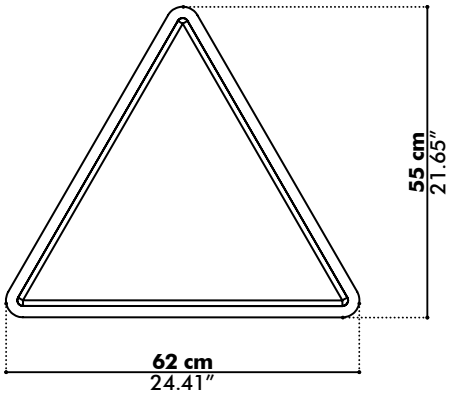

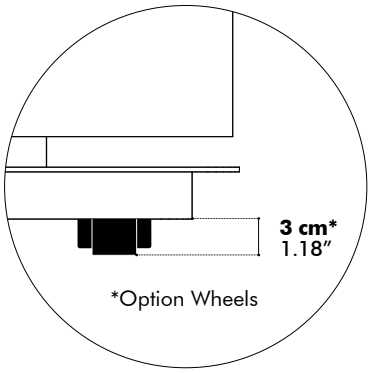

	Wedge Small	Wedge Medium	Wedge Large
H	120 cm	155 cm	190 cm
	47.24″	61.02″	74.80″

BuzziTotem Wedge Wood

Side

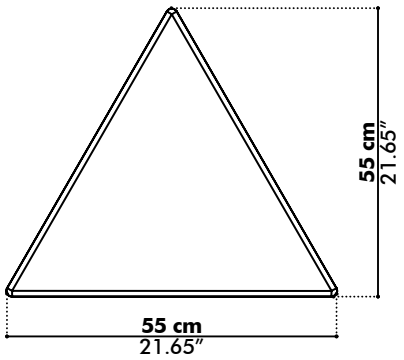

	Wedge Small	Wedge Medium	Wedge Large
H	116 cm	151 cm	186 cm
	45.67″	59.45″	73.23″

BuzziTotem Beam Baseplate

Side

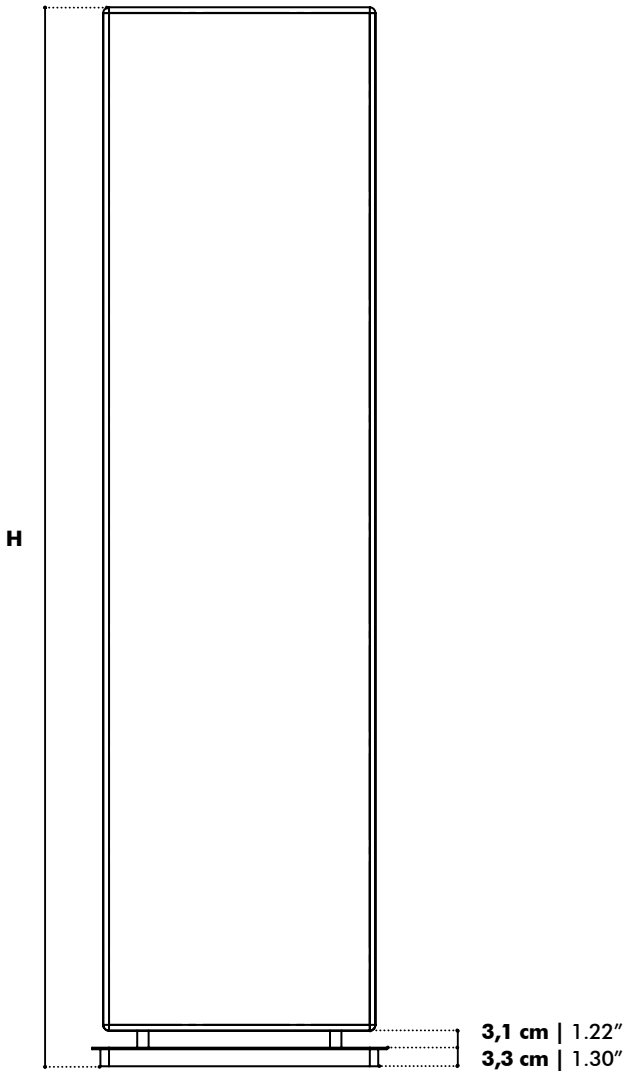

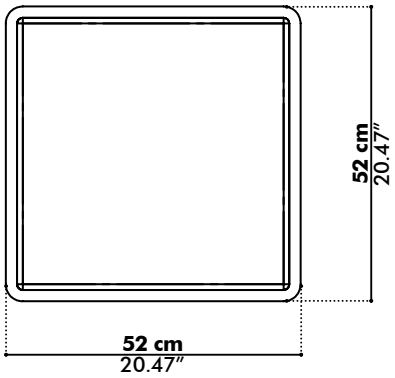

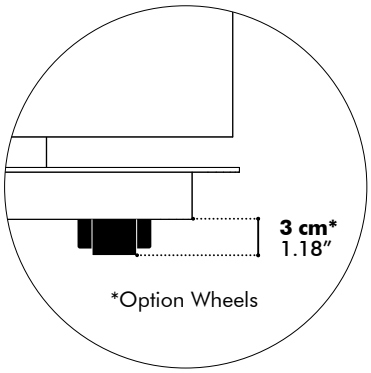

	Beam Small	Beam Medium	Wedge Large
H	120 cm	155 cm	190 cm
	47.24″	61.02″	74.80″

BuzziTotem Beam Wood

Side

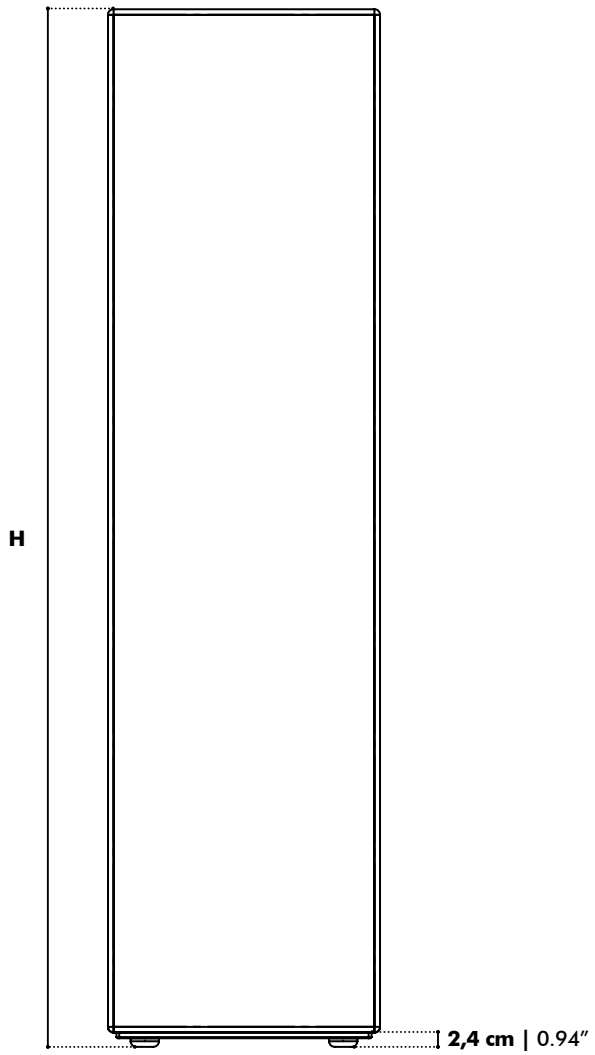

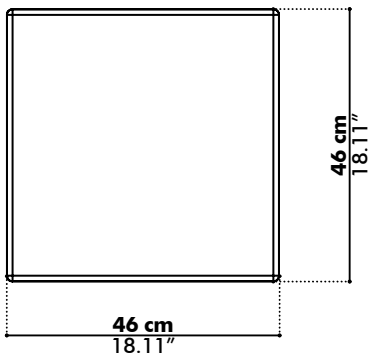

	Beam Small	Beam Medium	Beam Large
H	116 cm	151 cm	186 cm
	45.67″	59.45″	73.23″

BuzziTotem Cylinder Baseplate

Side

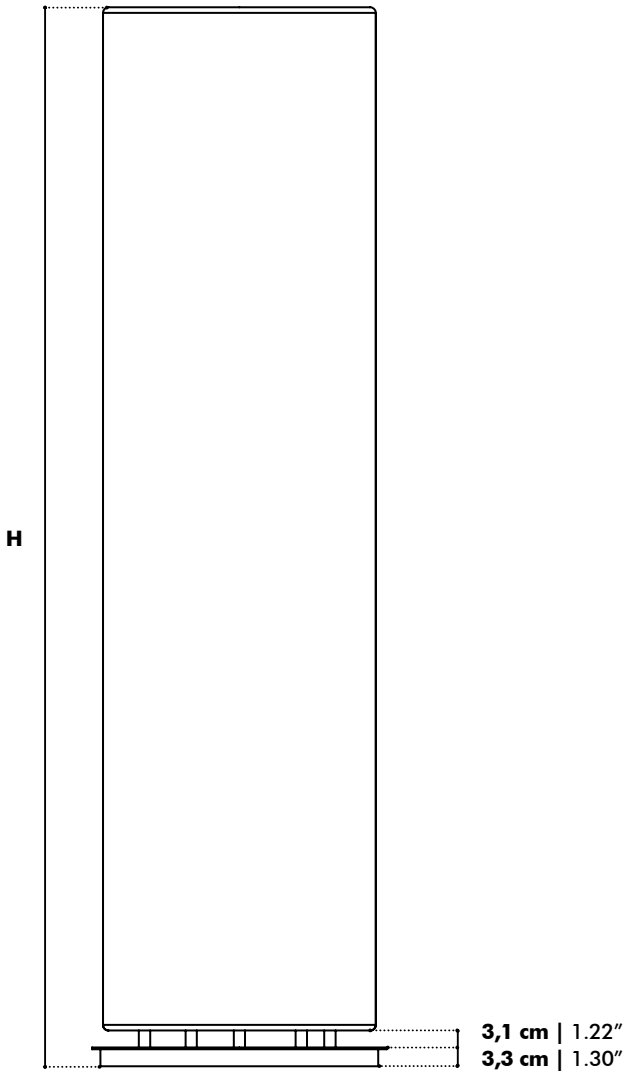

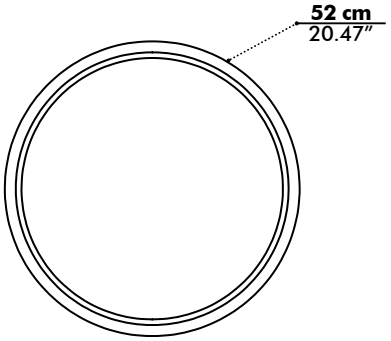

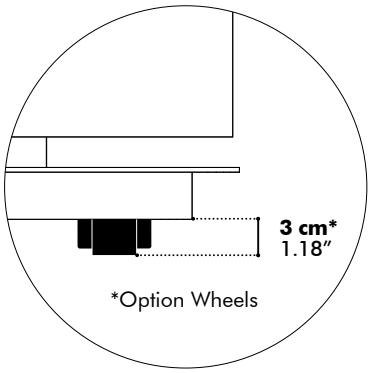

	Cylinder Small	Cylinder Medium	Cylinder Large
H	120 cm	155 cm	190 cm
	47.24″	61.02″	74.80″

BuzziTotem Cylinder Wood

Side

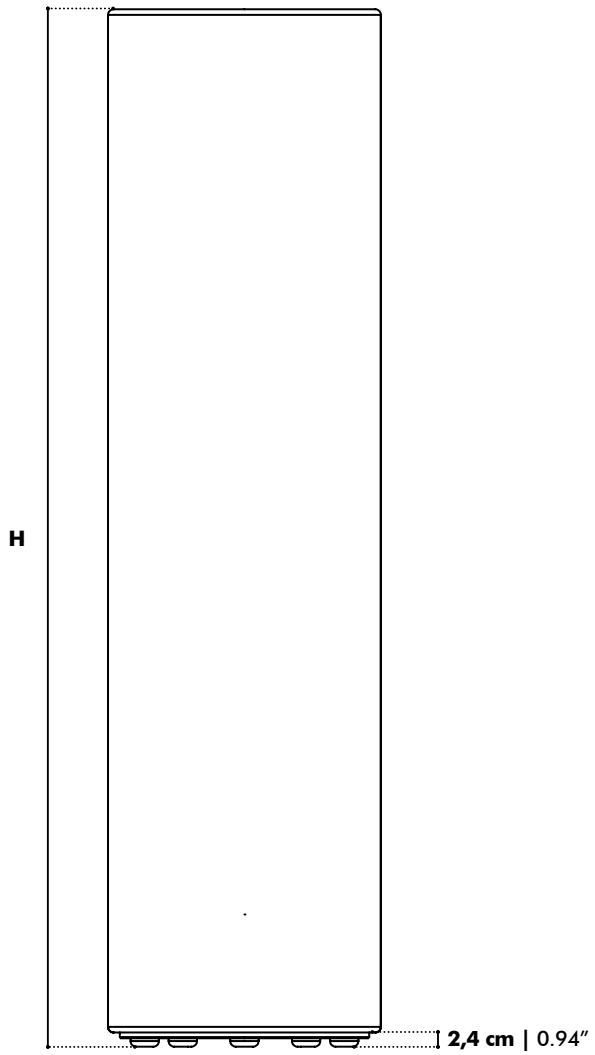

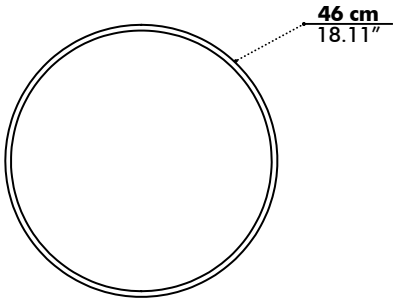

Flat	Cylinder Small	Cylinder Medium	Cylinder Large
H	116 cm	151 cm	186 cm
	45.67″	59.45″	73.23″

Acoustics

BuzziTotem Wedge

Equivalent sound absorption area in m² per object

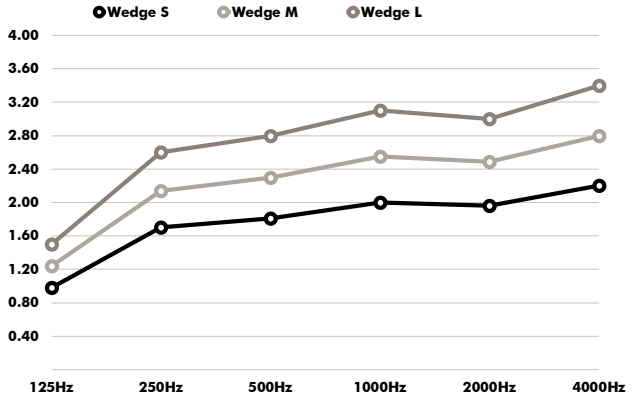

Hz	Wedge S Aeq/m²	Wedge M Aeq/m²	Wedge L Aeq/m²
125	0.98	1.24	1.50
250	1.70	2.14	2.60
500	1.81	2.30	2.80
1000	2.00	2.55	3.10
2000	1.96	2.49	3.00
4000	2.20	2.80	3.40

BuzziTotem Beam

Equivalent sound absorption area in m² per object

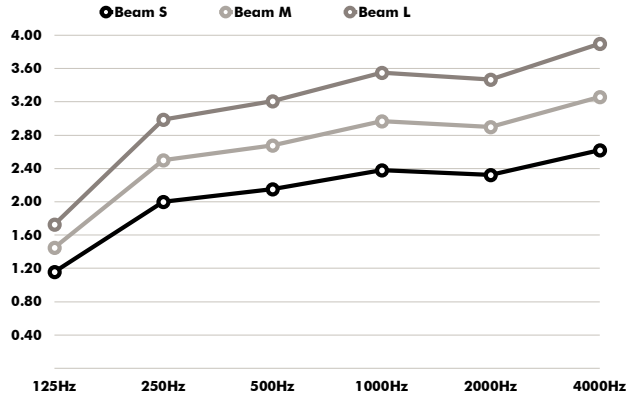

Hz	Beam S Aeq/m²	Beam M Aeq/m²	Beam L Aeq/m²
125	1.16	1.45	1.73
250	2.00	2.50	2.99
500	2.15	2.68	3.21
1000	2.38	2.97	3.55
2000	2.32	2.90	3.47
4000	2.62	3.26	3.90

BuzziTotem Cylinder

Equivalent sound absorption area in m² per object

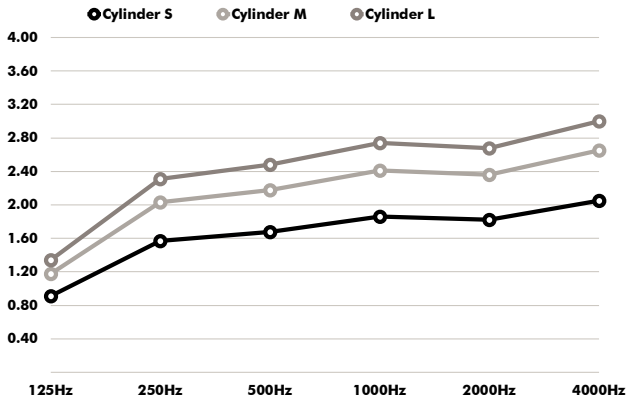

Hz	Cylinder S Aeq/m²	Cylinder M Aeq/m²	Cylinder L Aeq/m²
125	0.91	1.18	1.34
250	1.57	2.03	2.31
500	1.68	2.18	2.48
1000	1.86	2.41	2.74
2000	1.82	2.36	2.68
4000	2.05	2.65	3.00