# BuzziNest Pod

INSTALLATION MANUAL

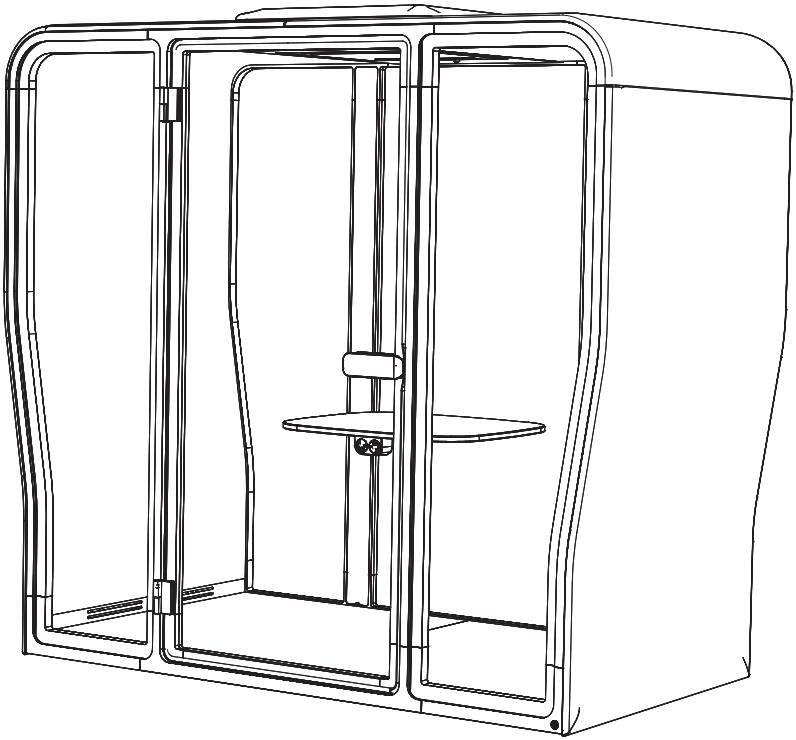

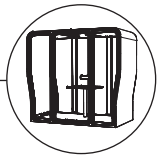

2 PERS.

## Excluded

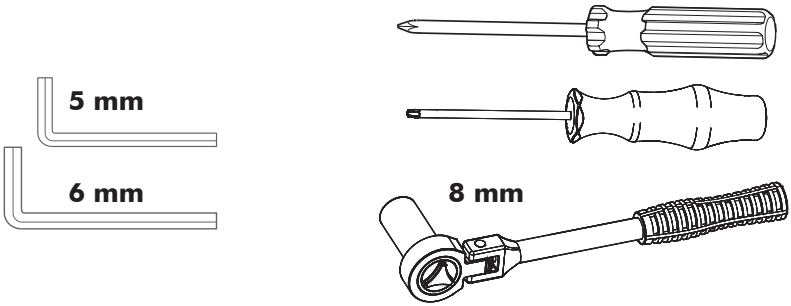


## Included

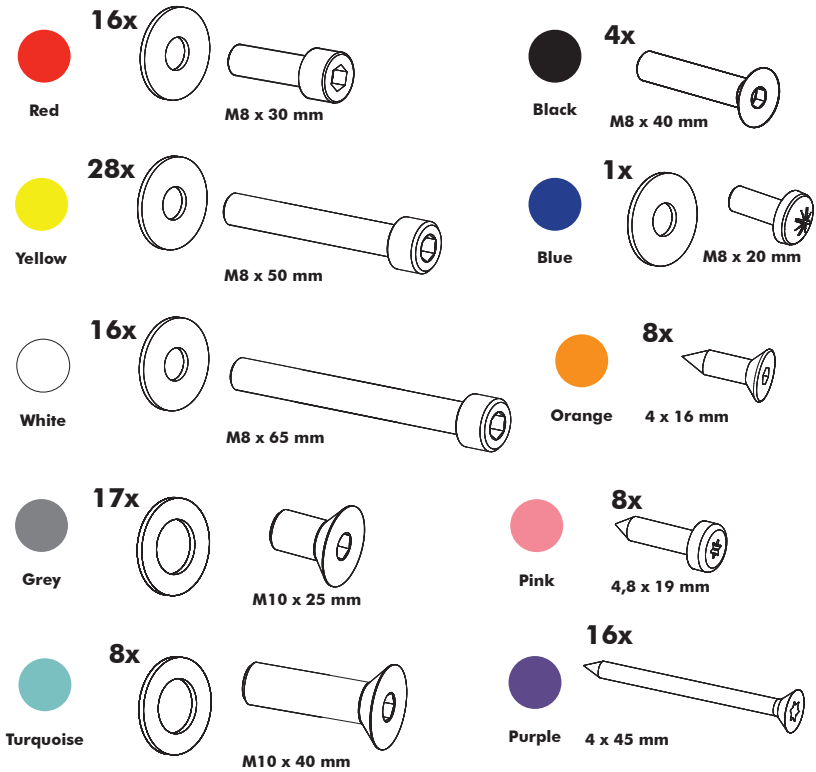

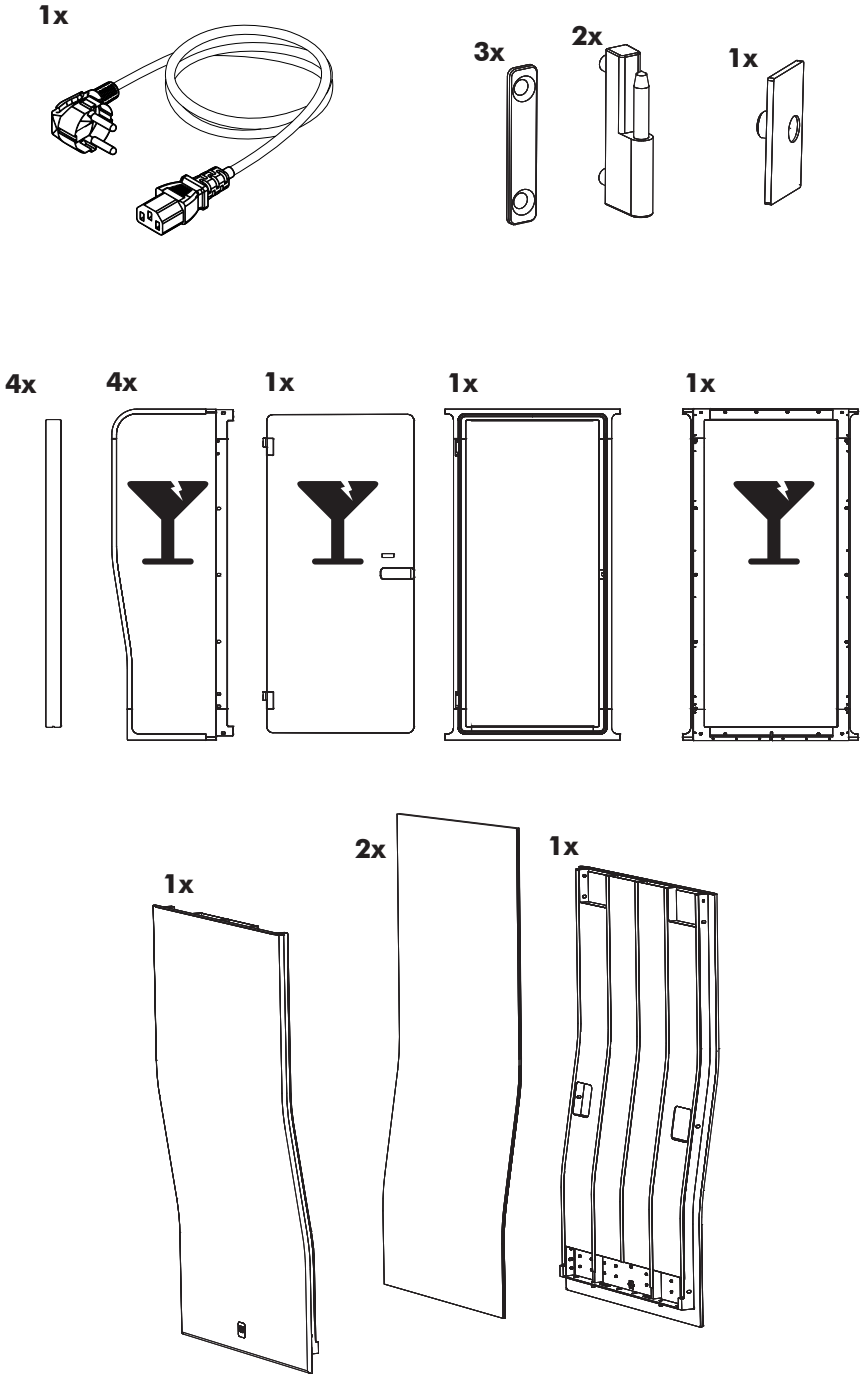
1x
3x
2x
1x
4x
4x
1x
1x
1x
1x
2x
1x

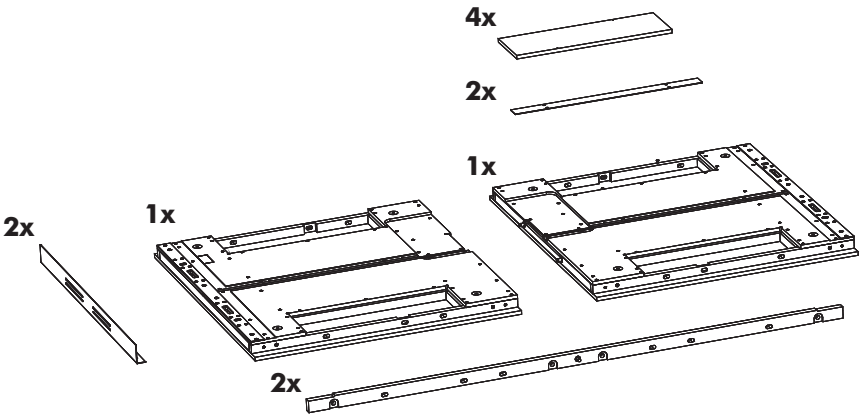
4x
2x
1x
2x
1x
2x

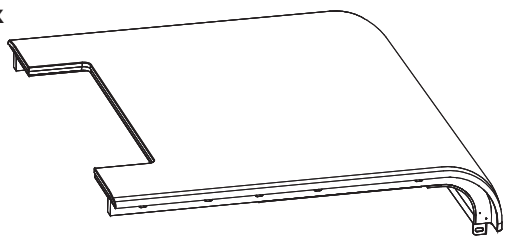
2x

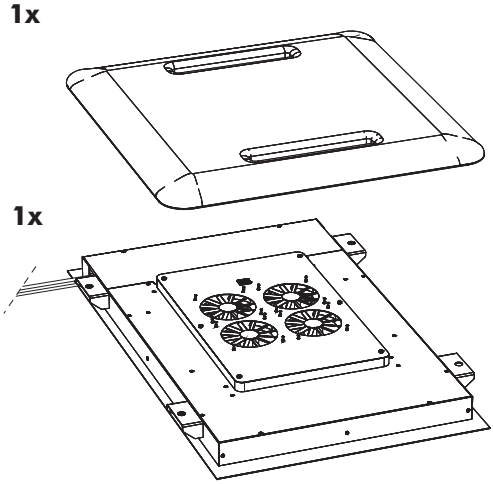
1x
1x

## No Table

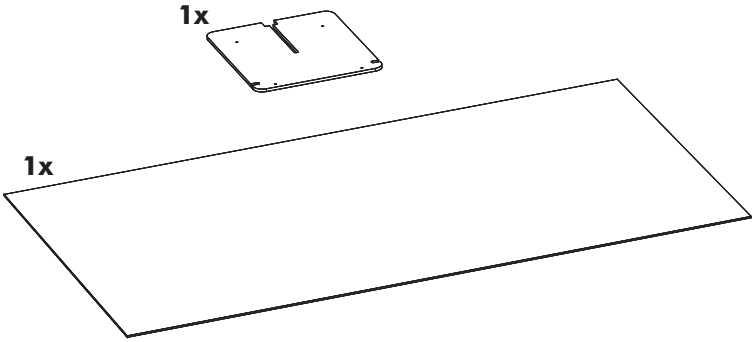


## Optional Table and electrification

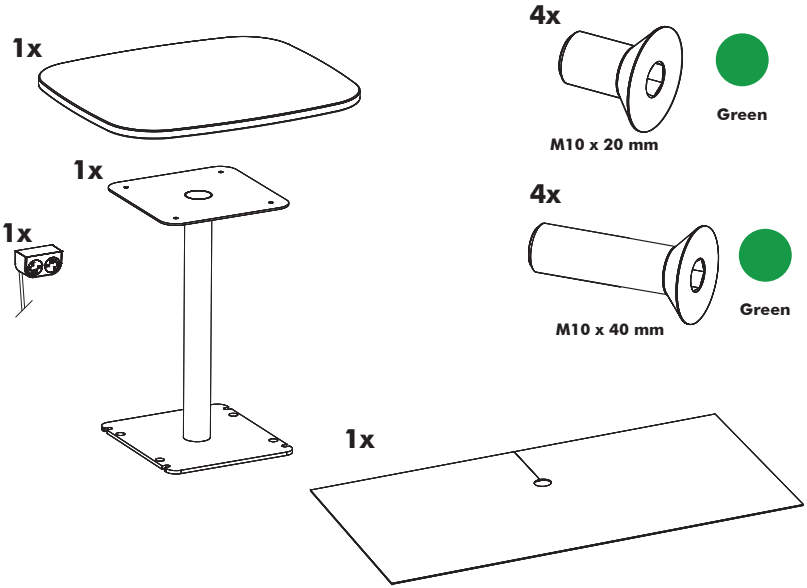

1

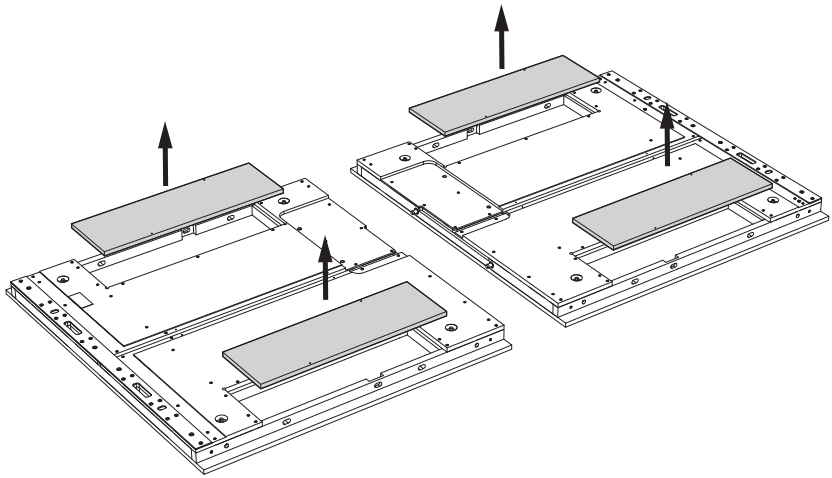

2

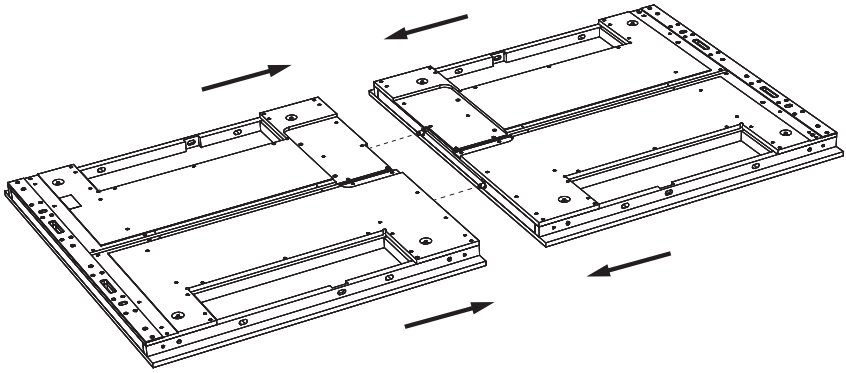

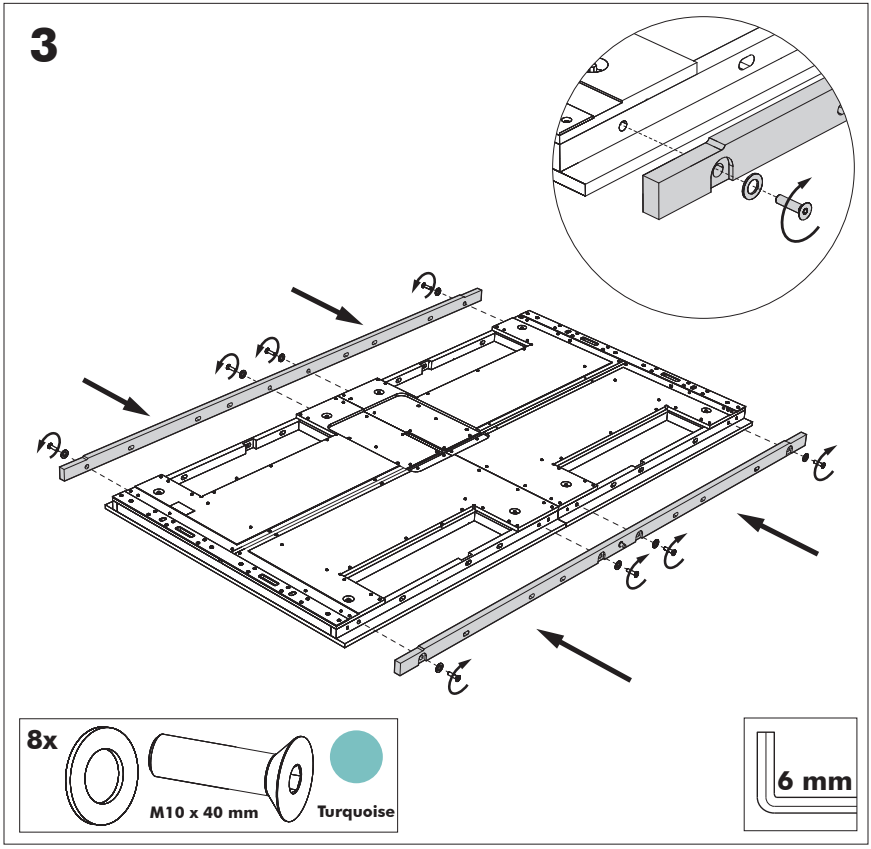
3
8x
M10 x 40 mm
Turquoise
6 mm

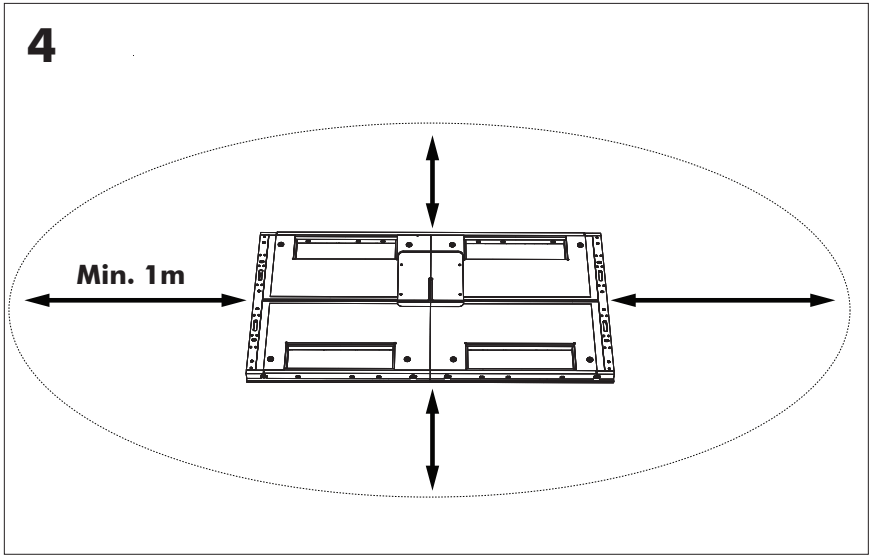
4
Min. 1m

# 5

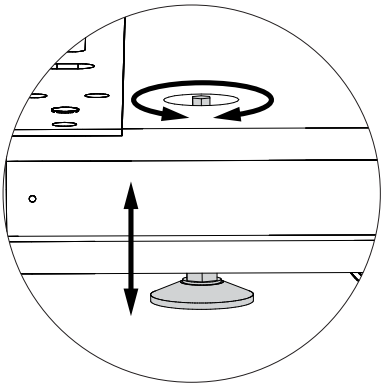

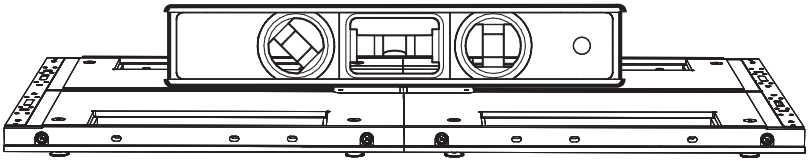

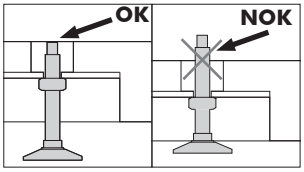

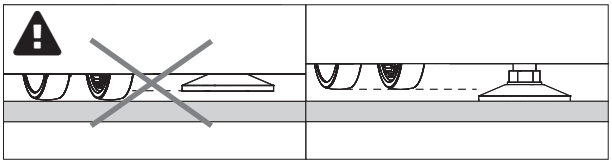

# 6

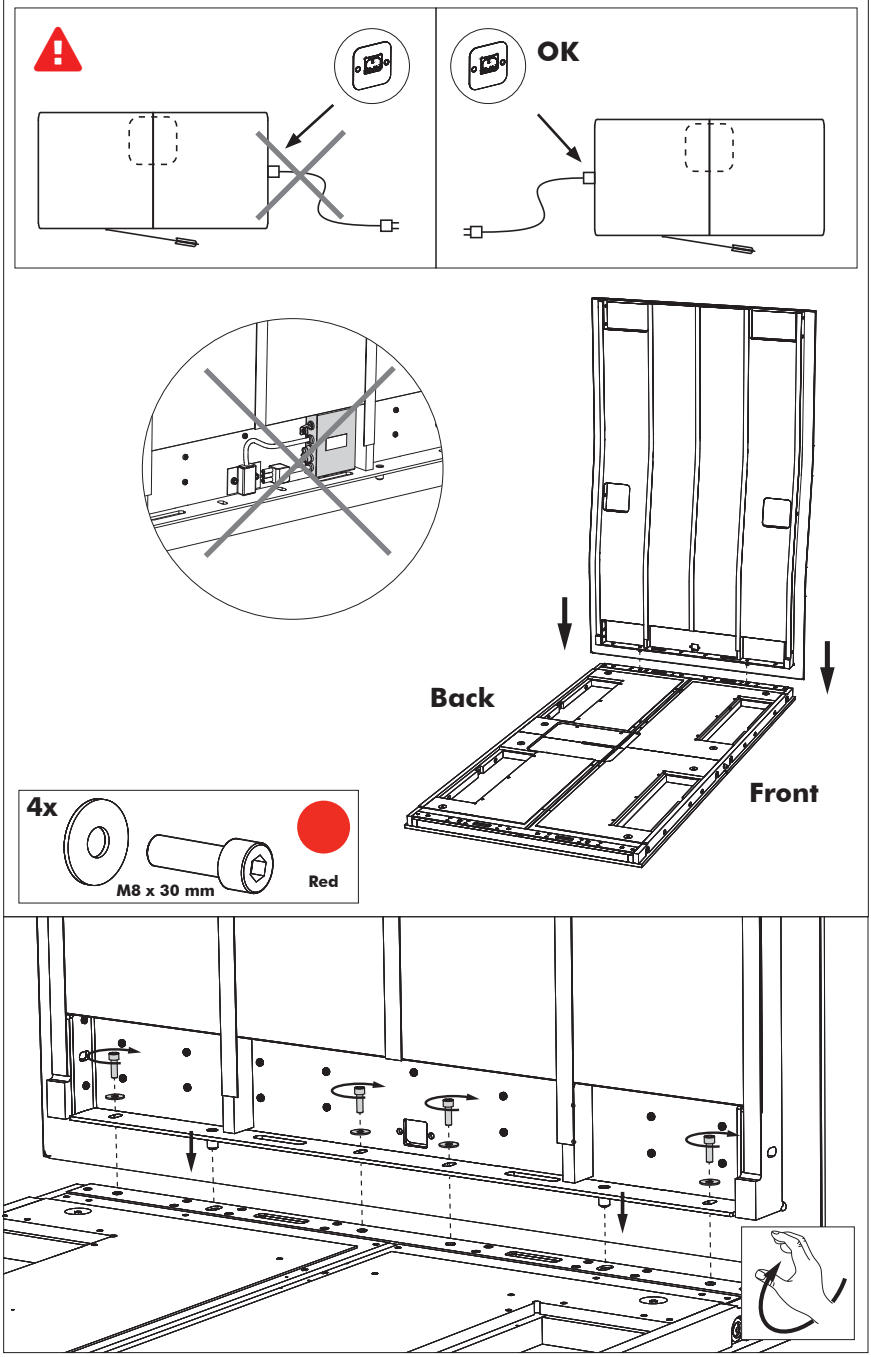

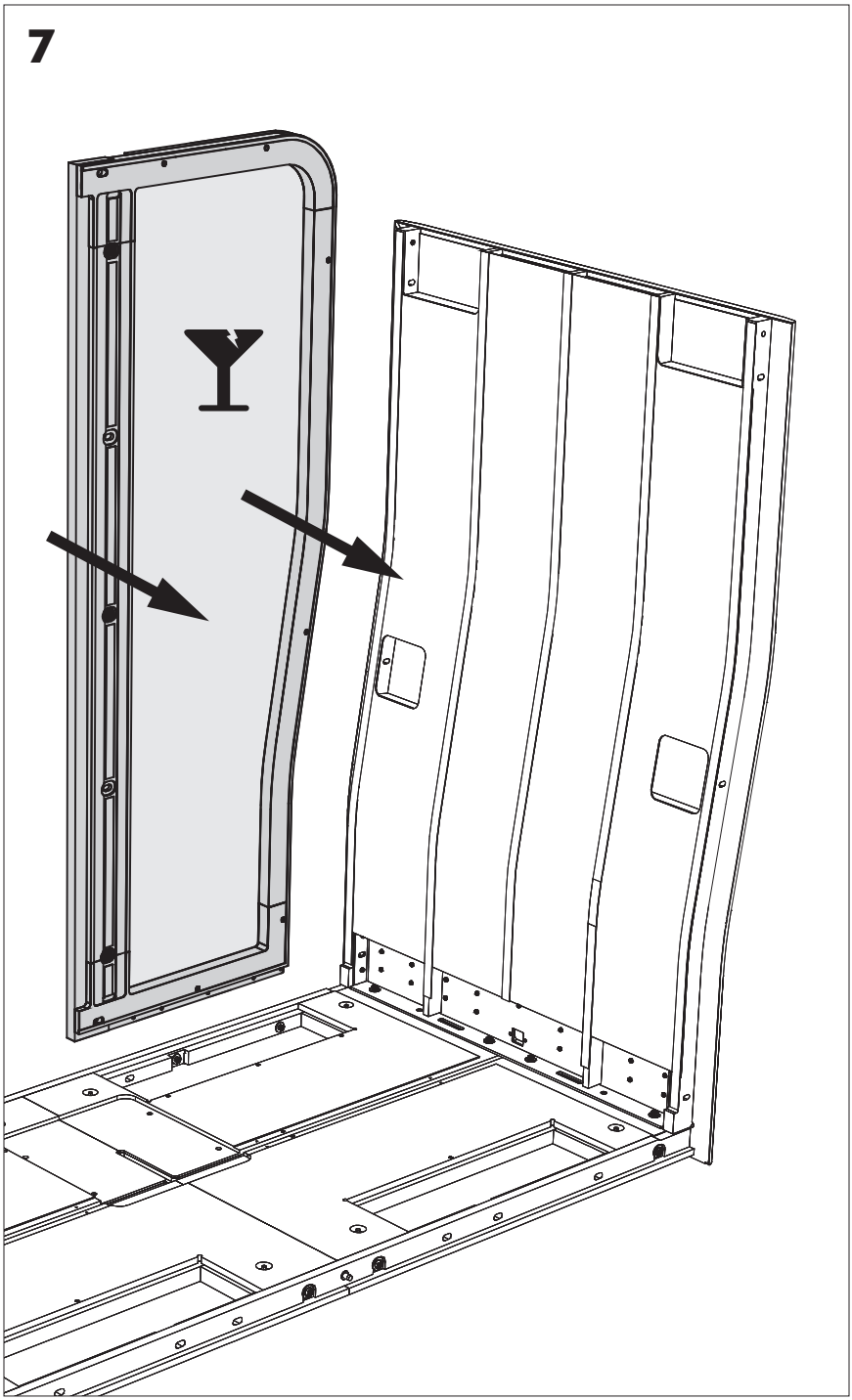
7

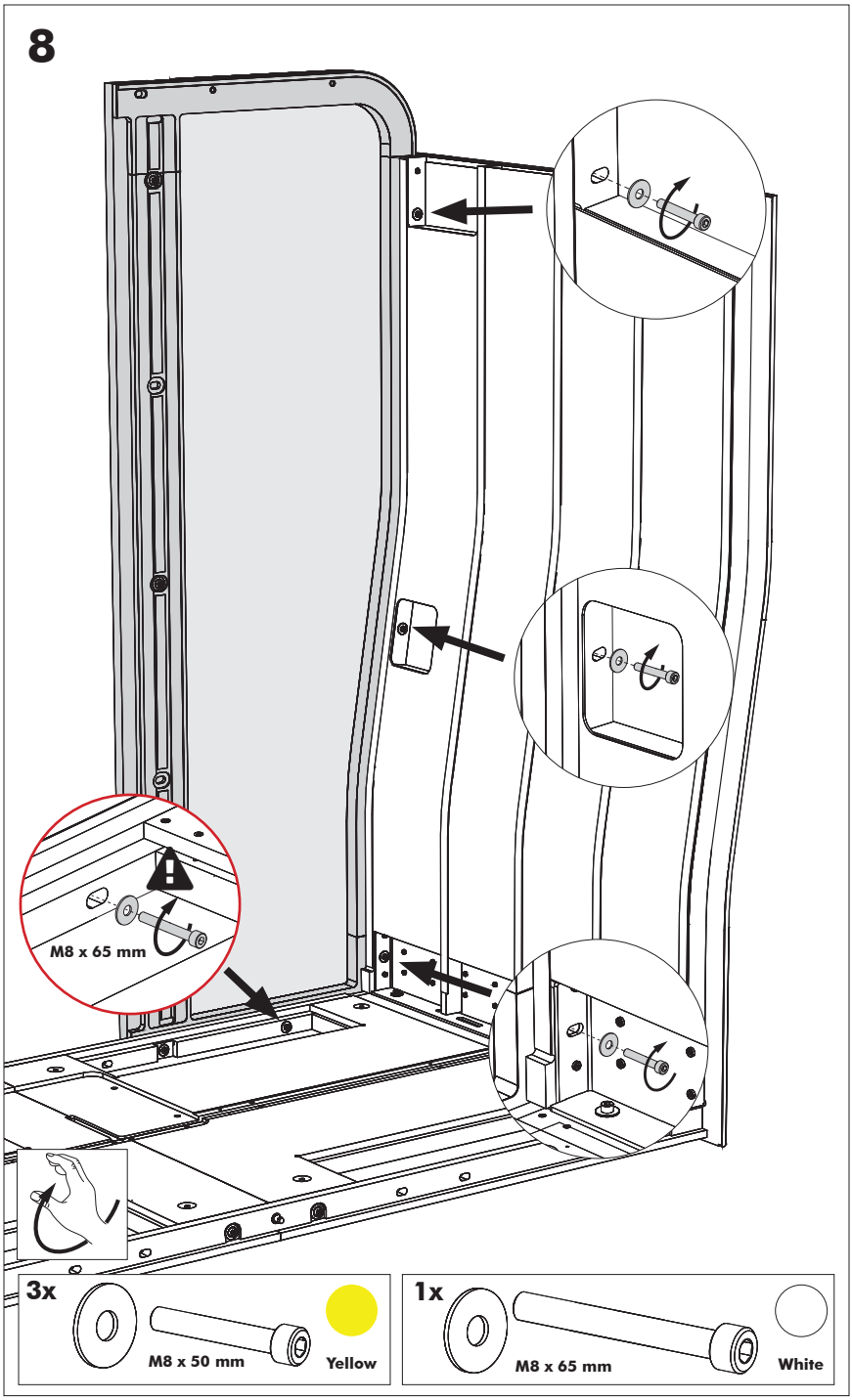
8
M8 x 65 mm
3x
M8 x 50 mm
Yellow
1x
M8 x 65 mm
White

9

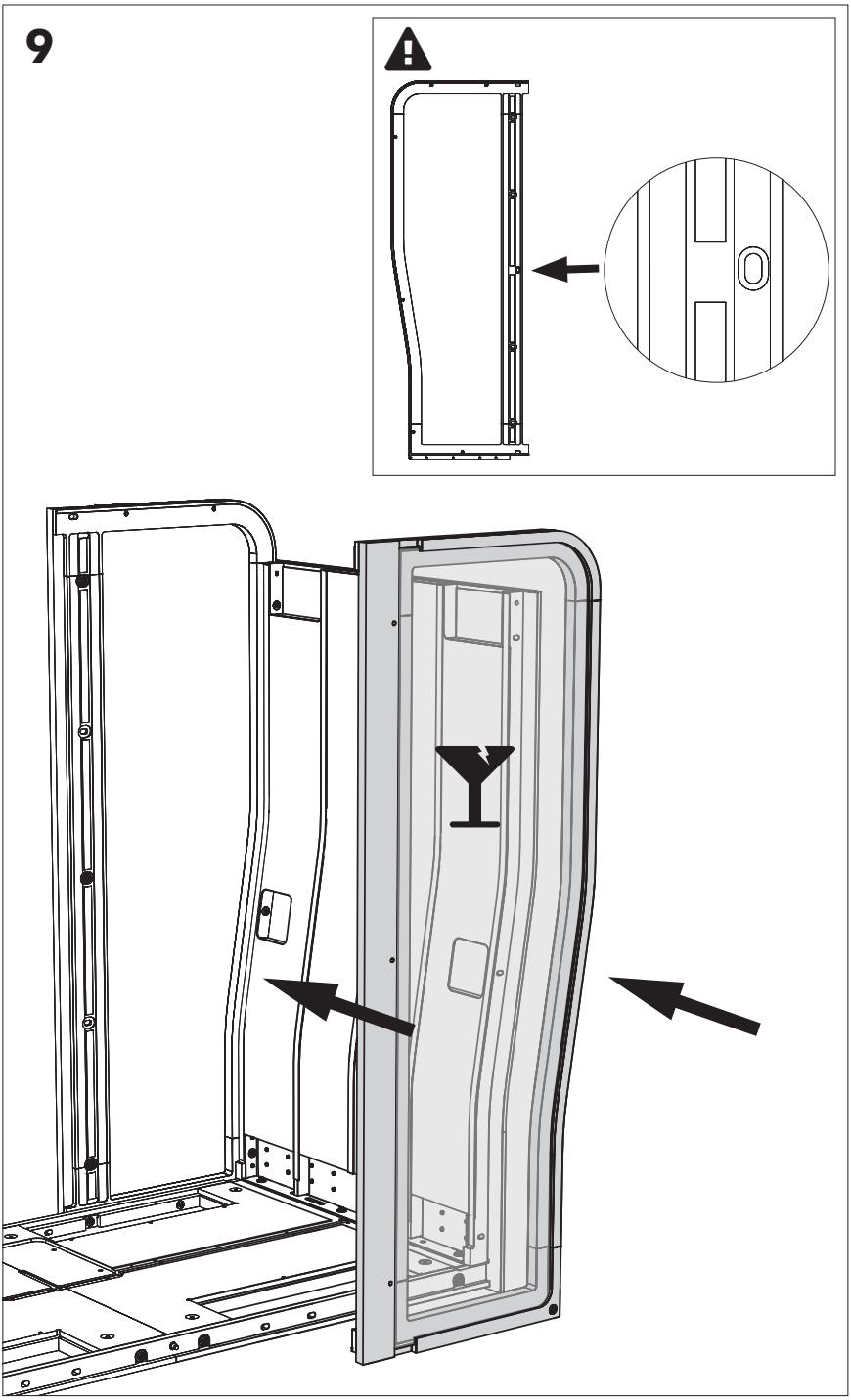

# 10

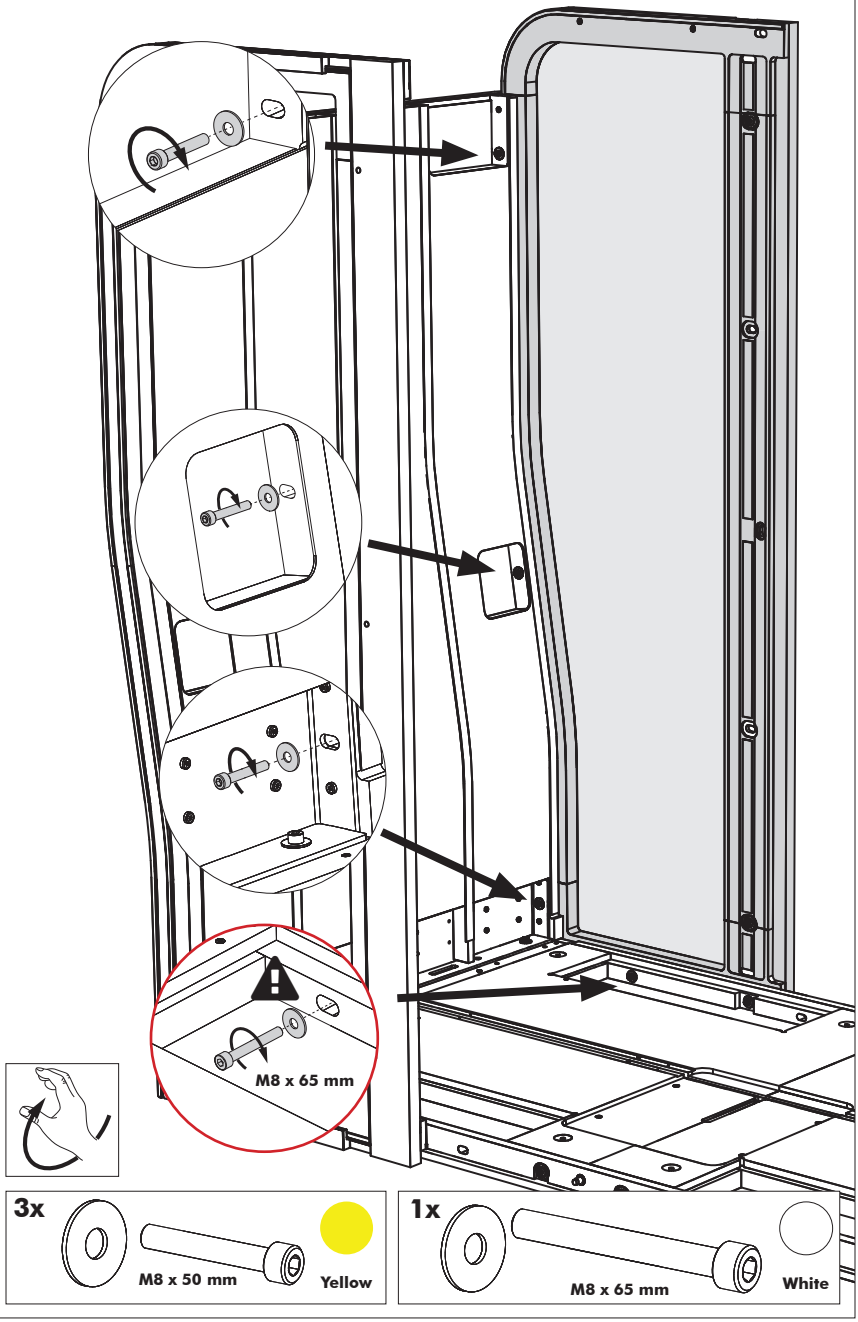

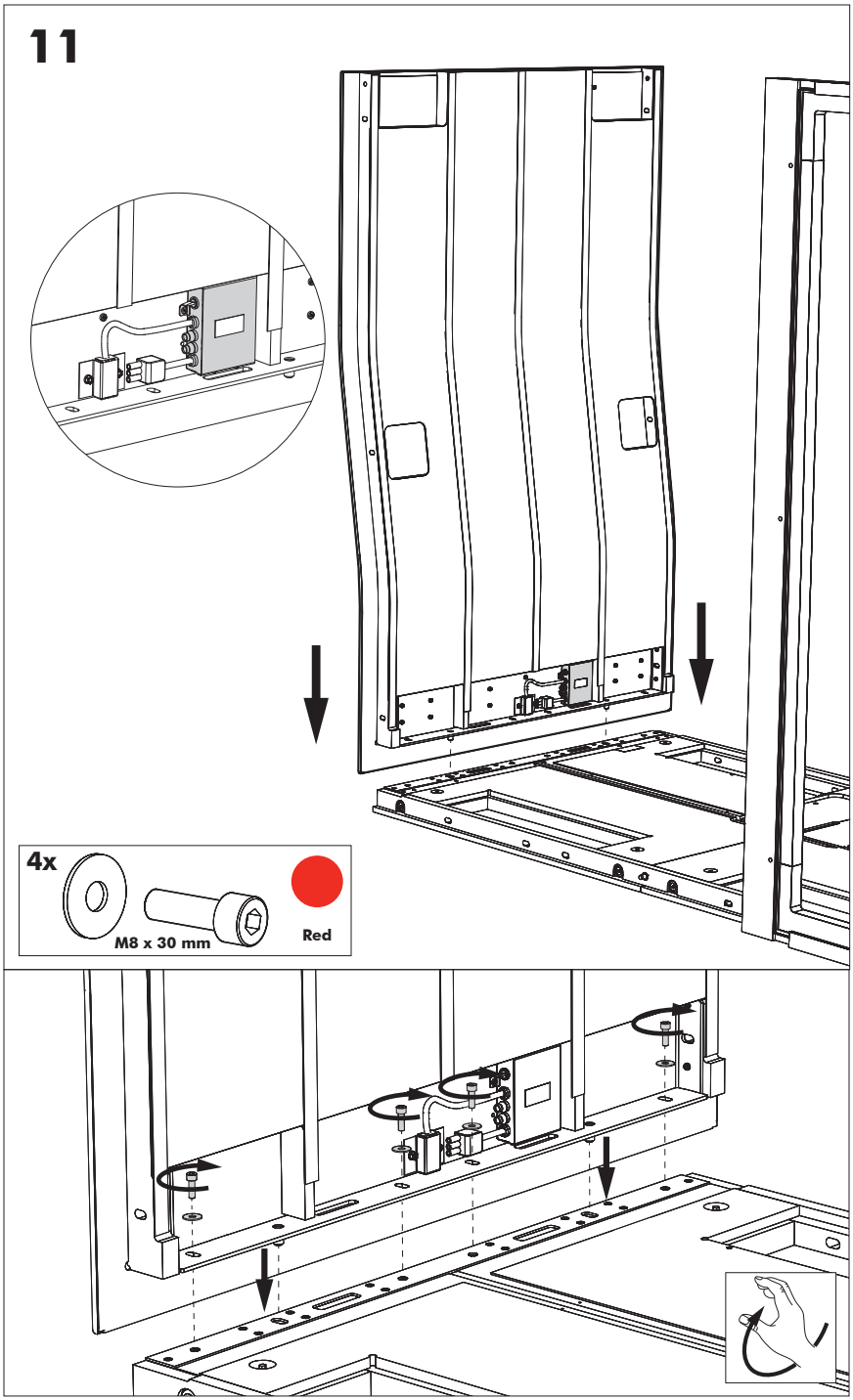
11
4x
M8 x 30 mm
Red

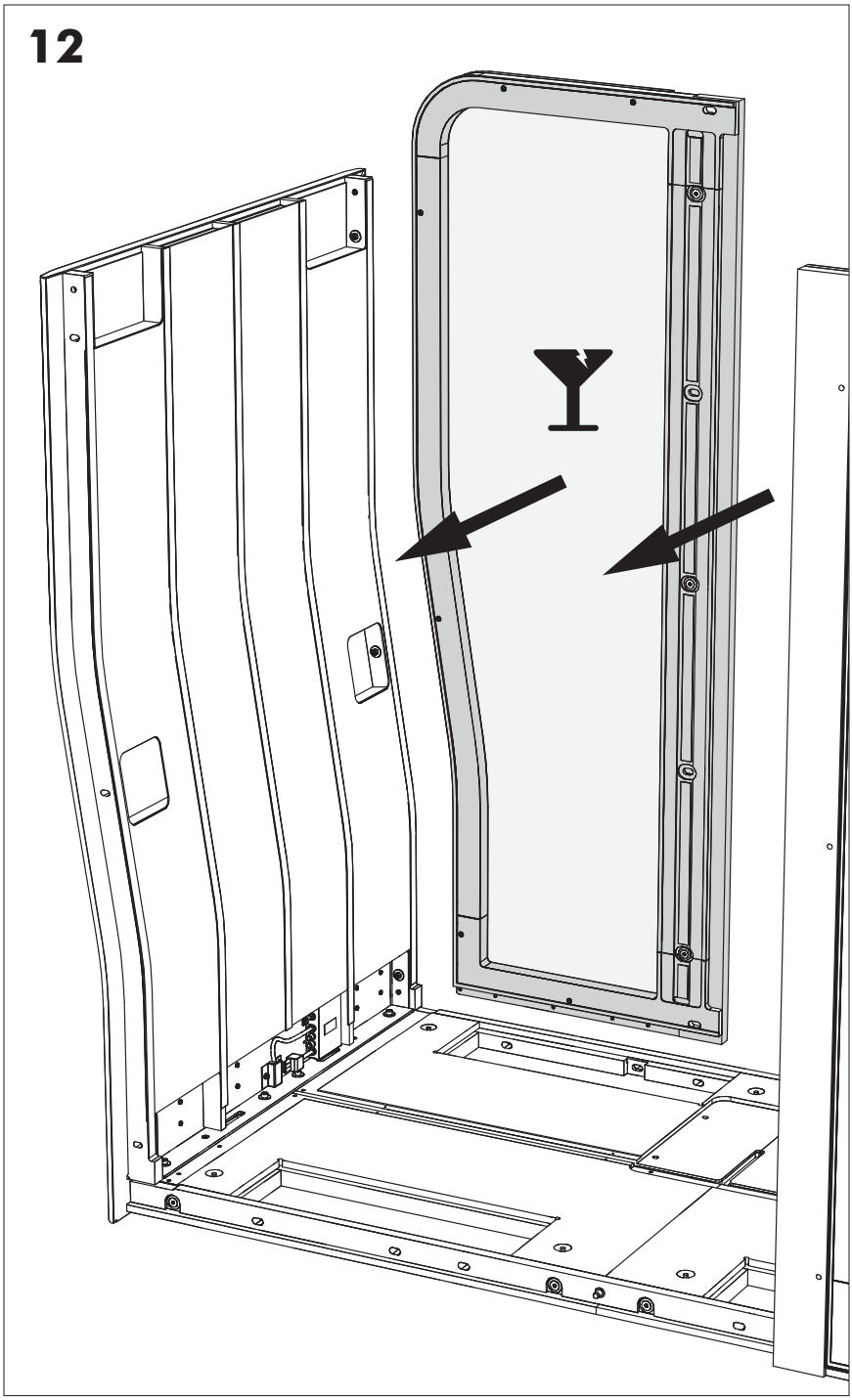
12

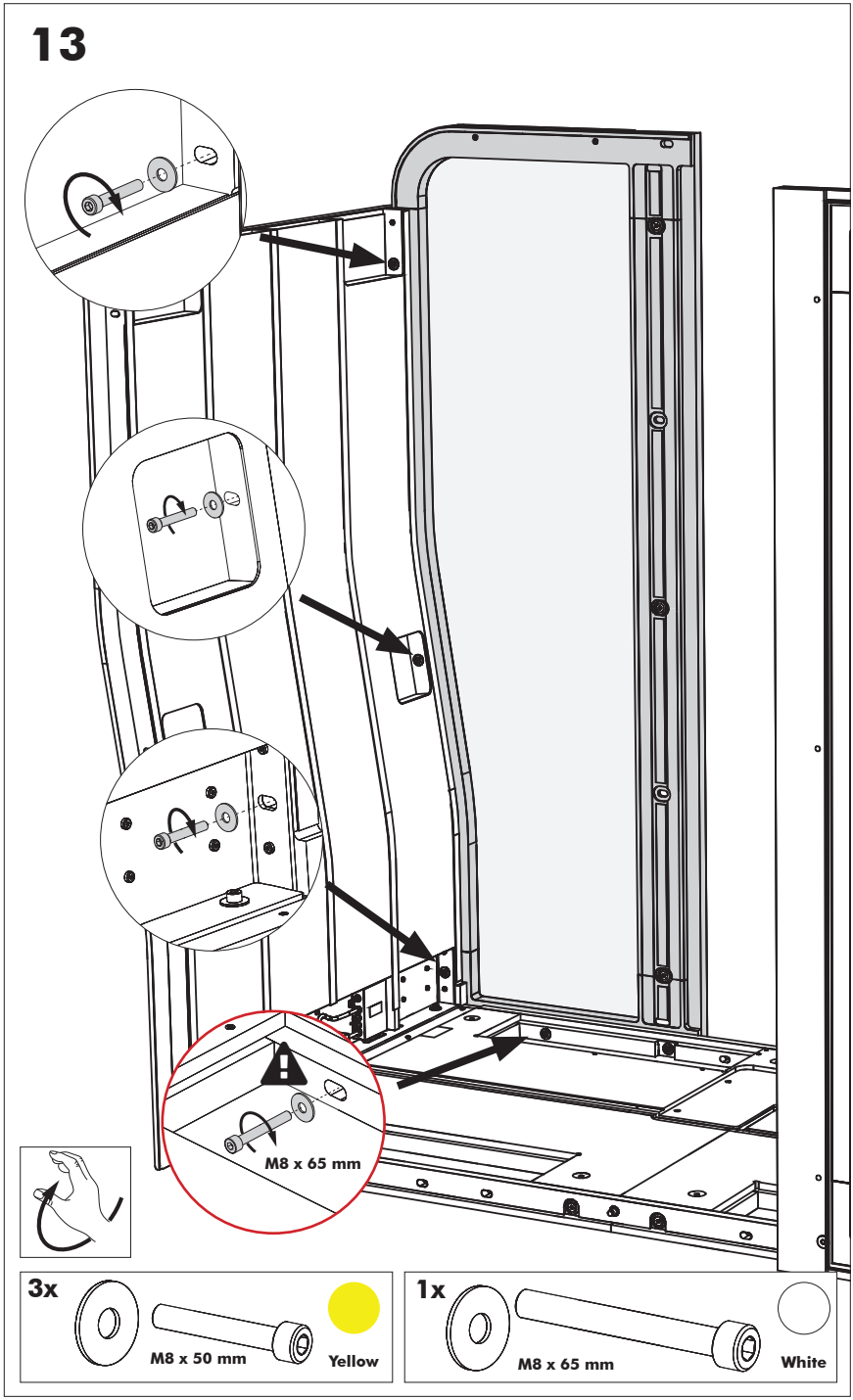
13
M8 x 65 mm
3x
M8 x 50 mm
Yellow
1x
M8 x 65 mm
White

# 14

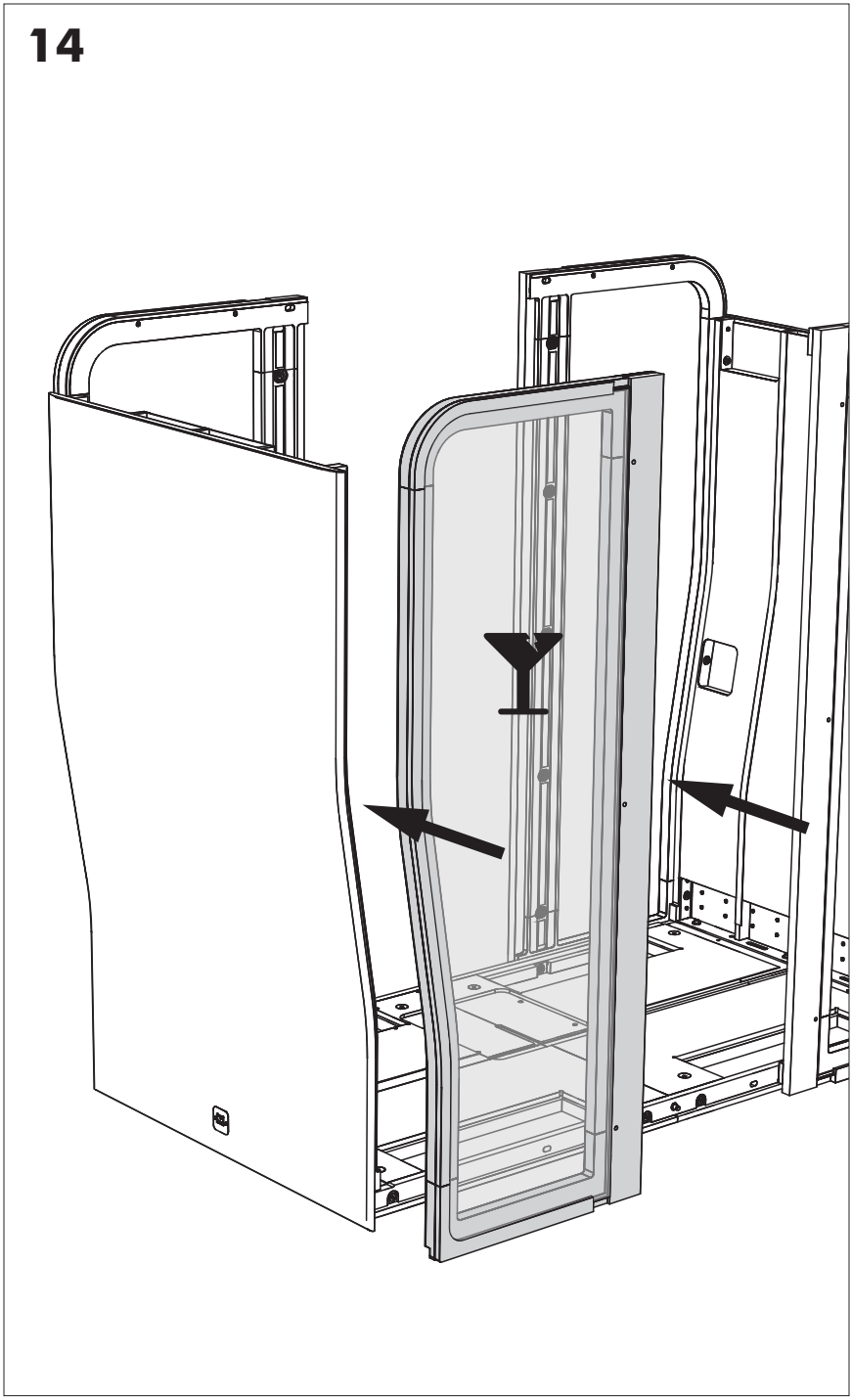

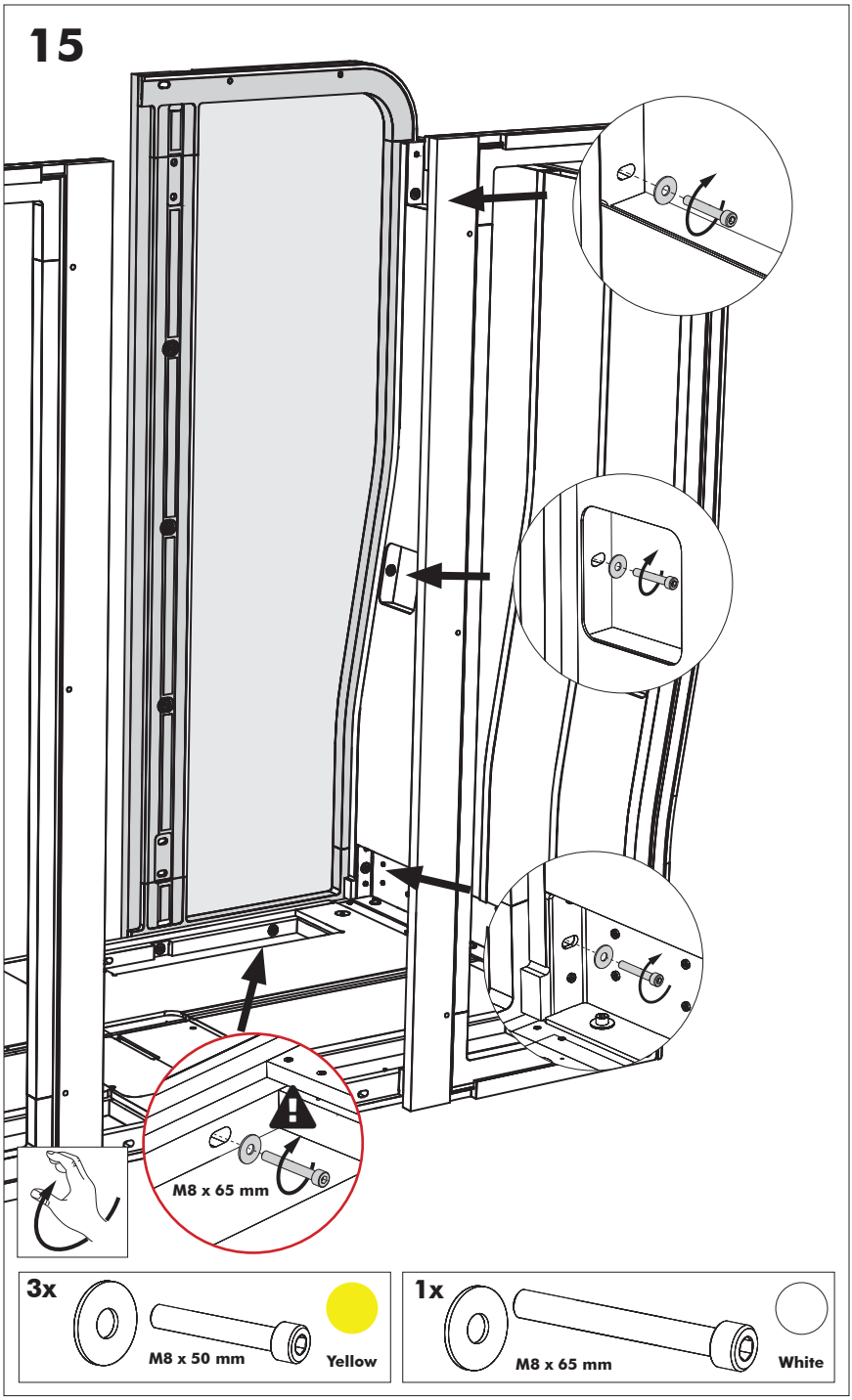
15
M8 x 65 mm
3x
M8 x 50 mm
Yellow
1x
M8 x 65 mm
White

# 16

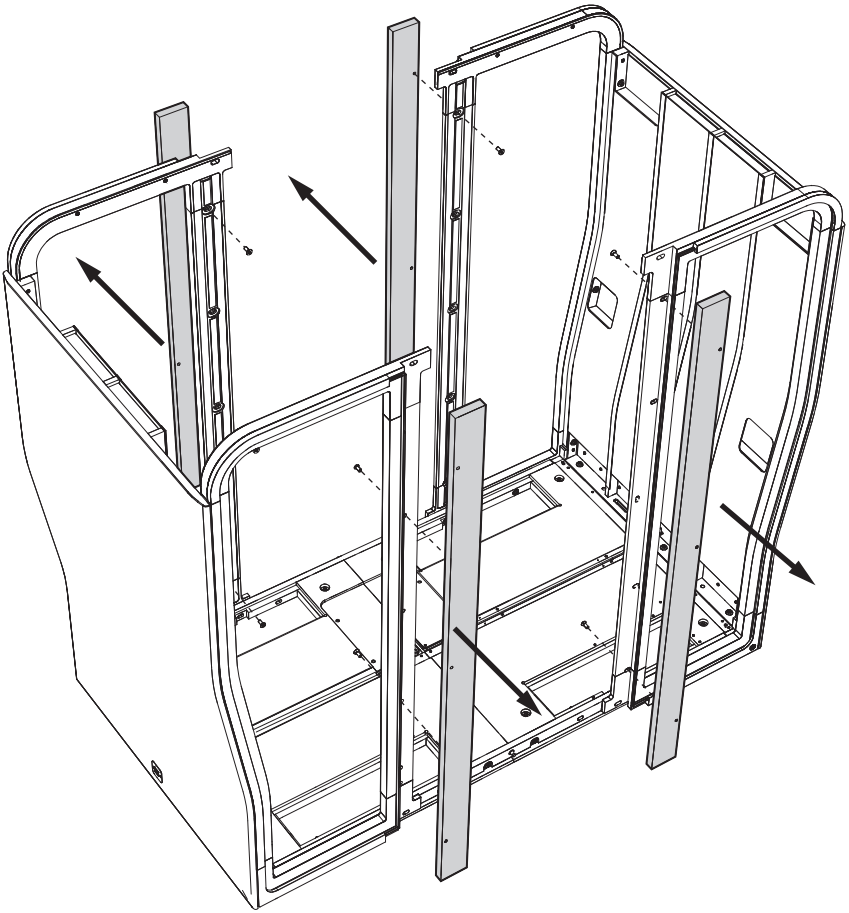

17

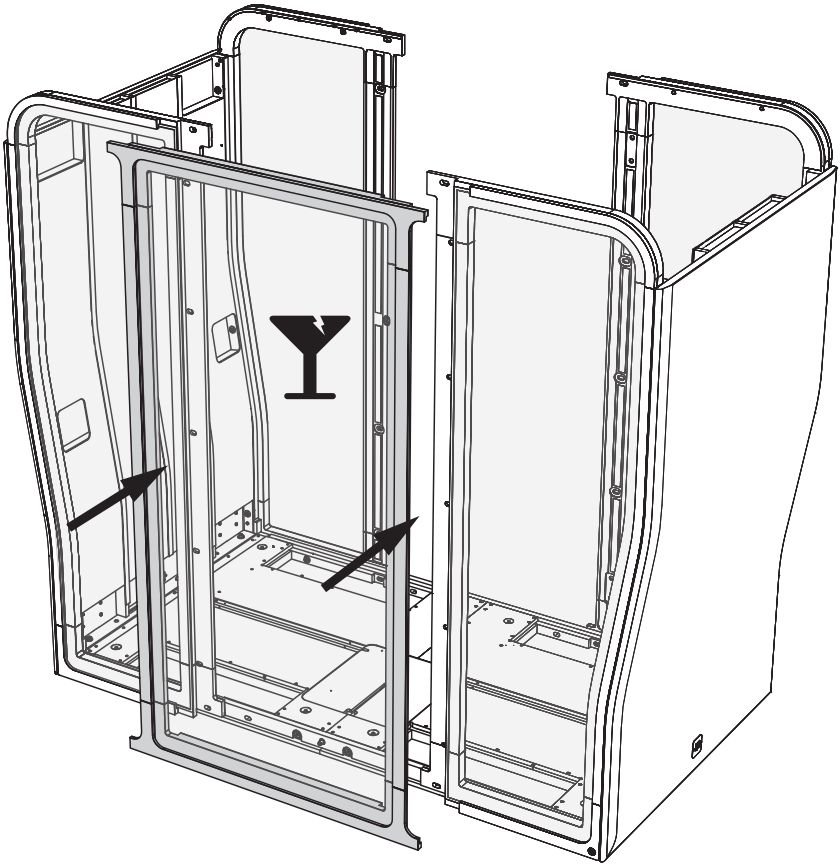

# 18

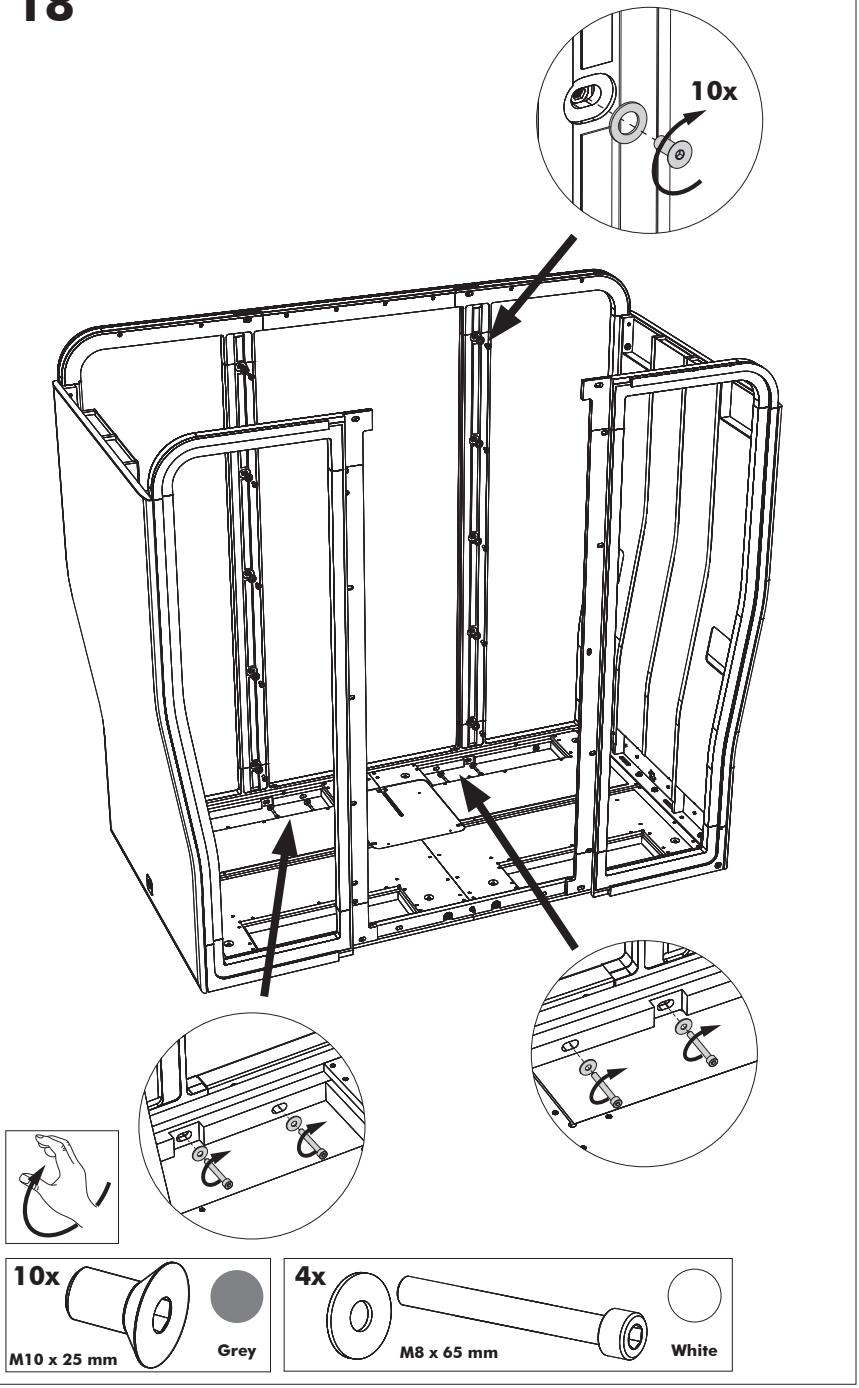

**19**

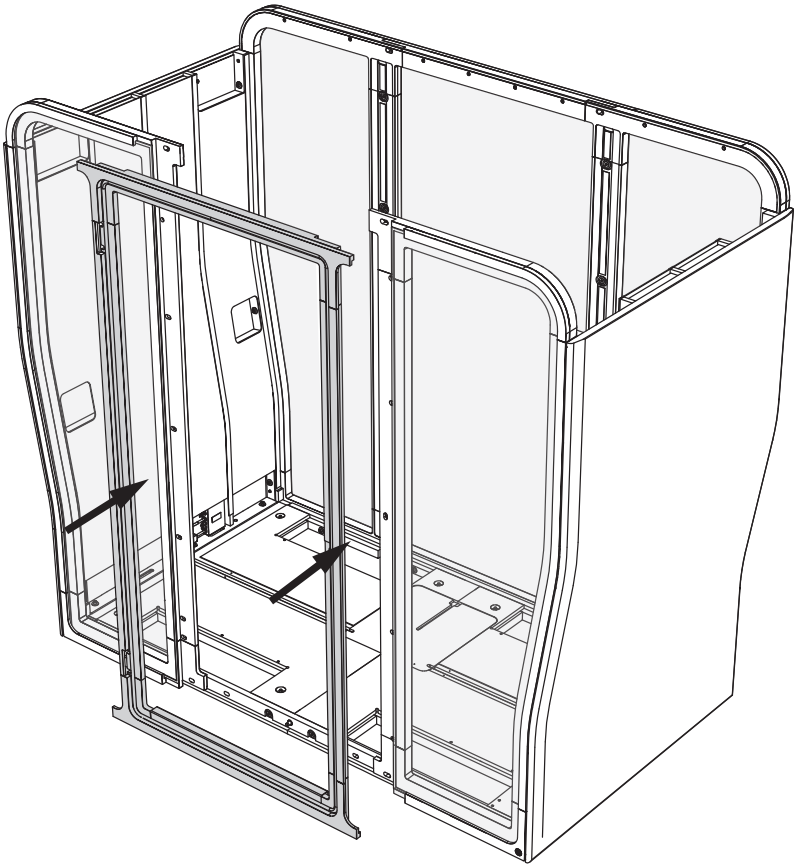

# 20

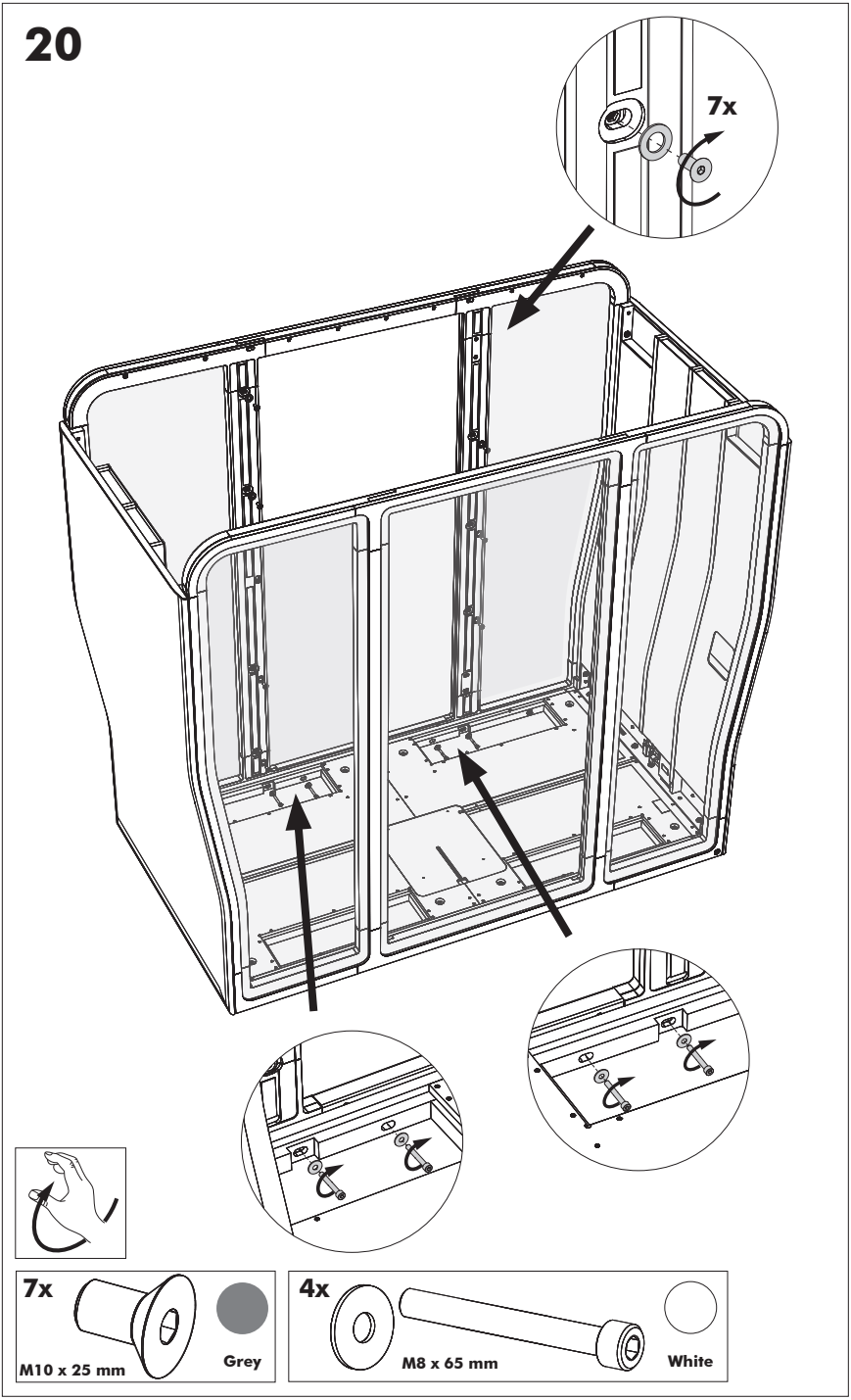

**21**

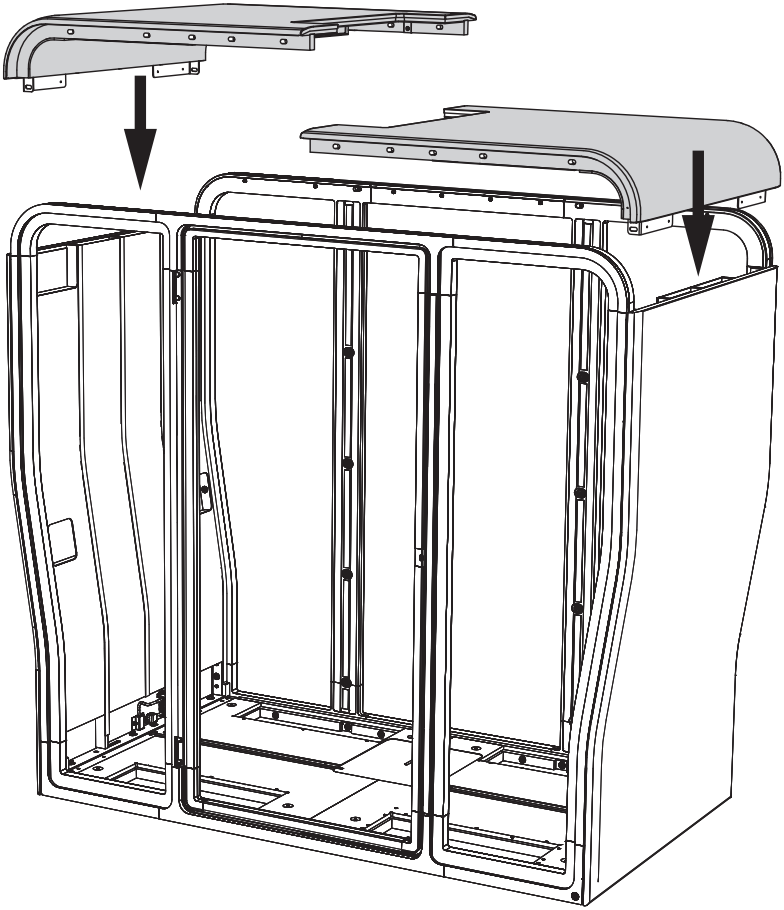

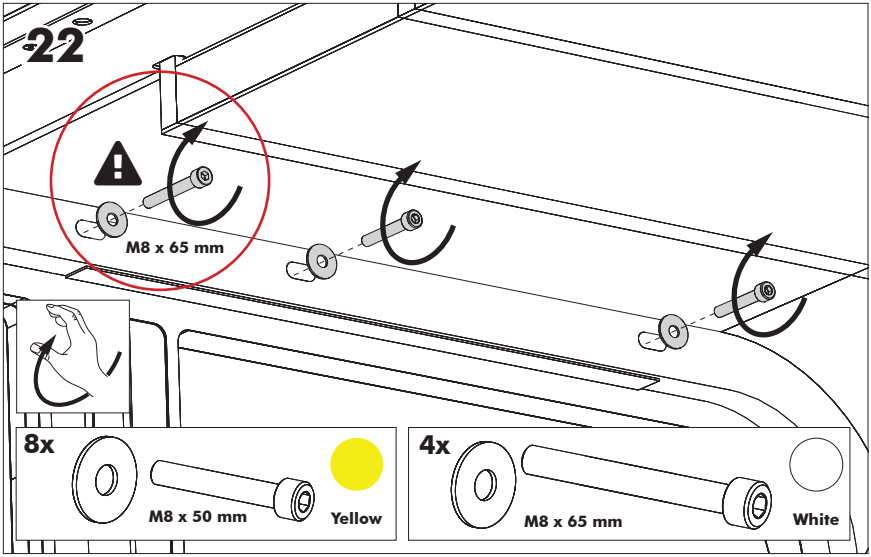
22
M8 x 65 mm
8x
M8 x 50 mm
Yellow
4x
M8 x 65 mm
White

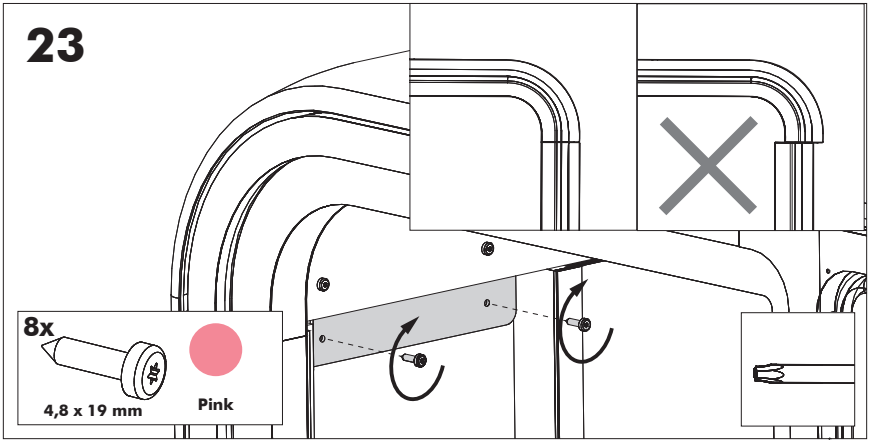
23
8x
4,8 x 19 mm
Pink

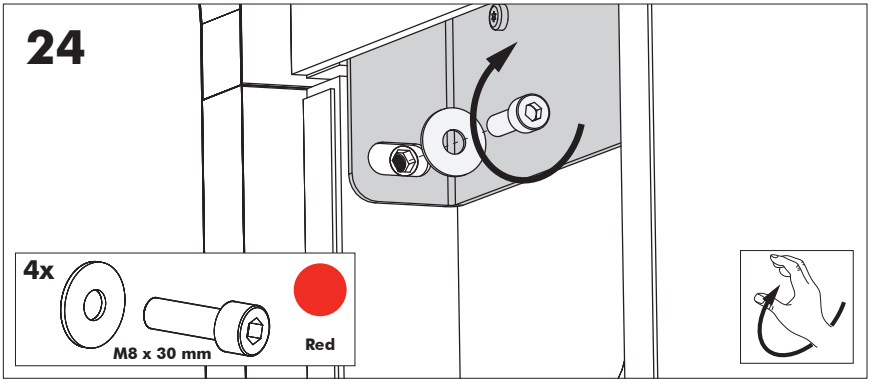
24
4x
M8 x 30 mm
Red

## 25

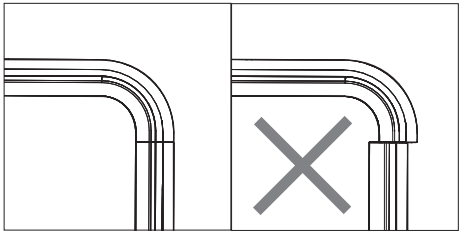

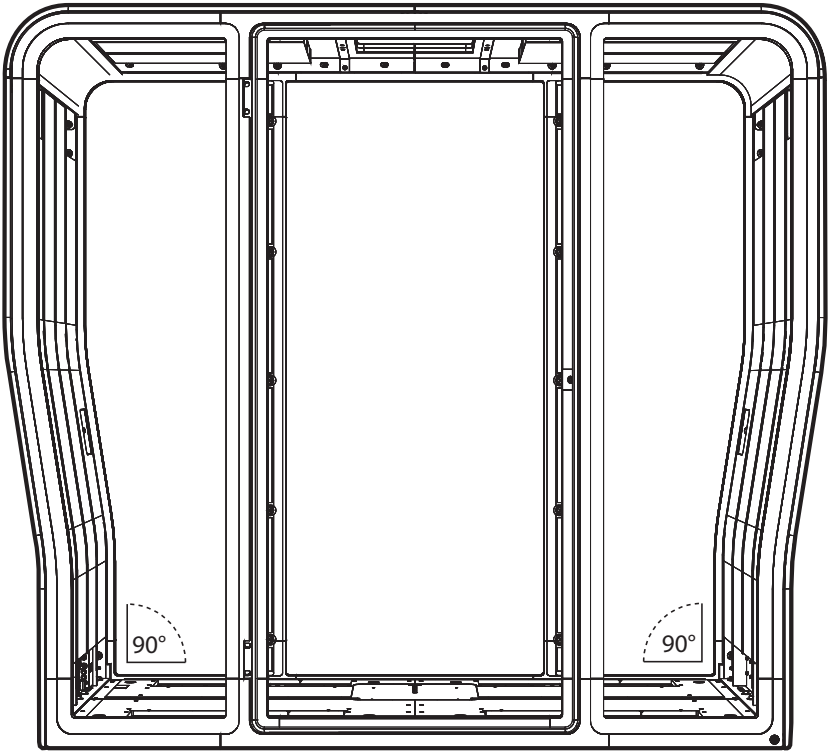


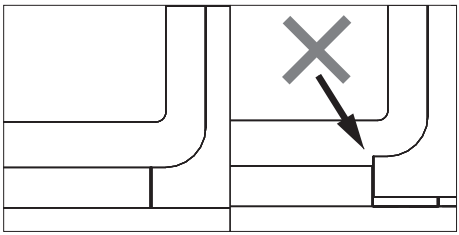

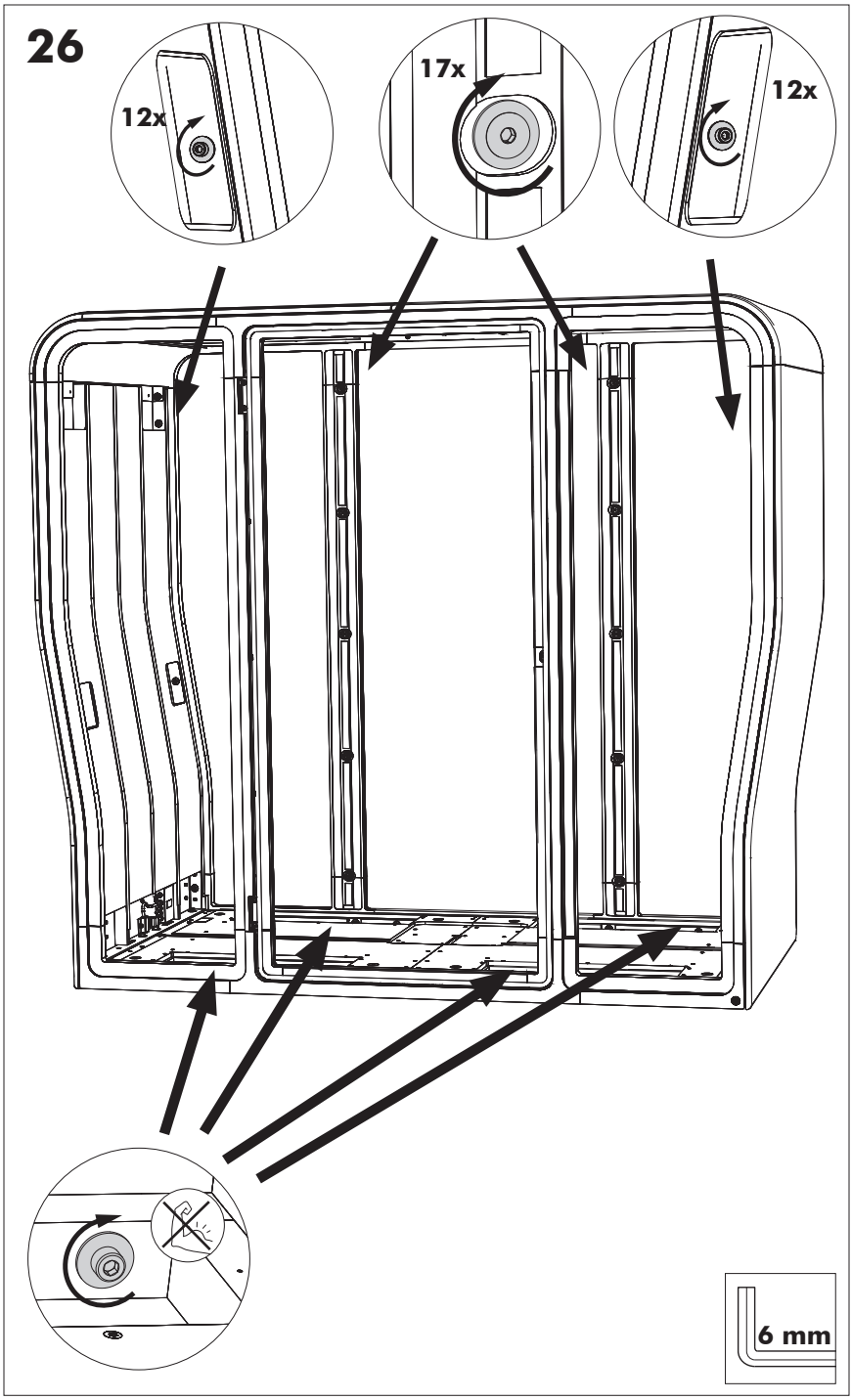
26
12x
17x
12x
6 mm

# 27

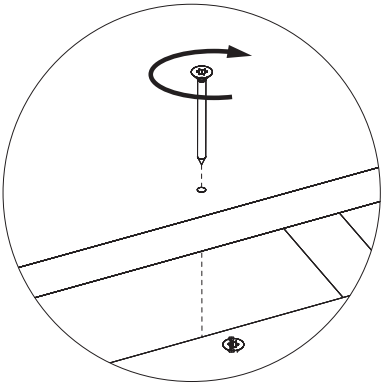

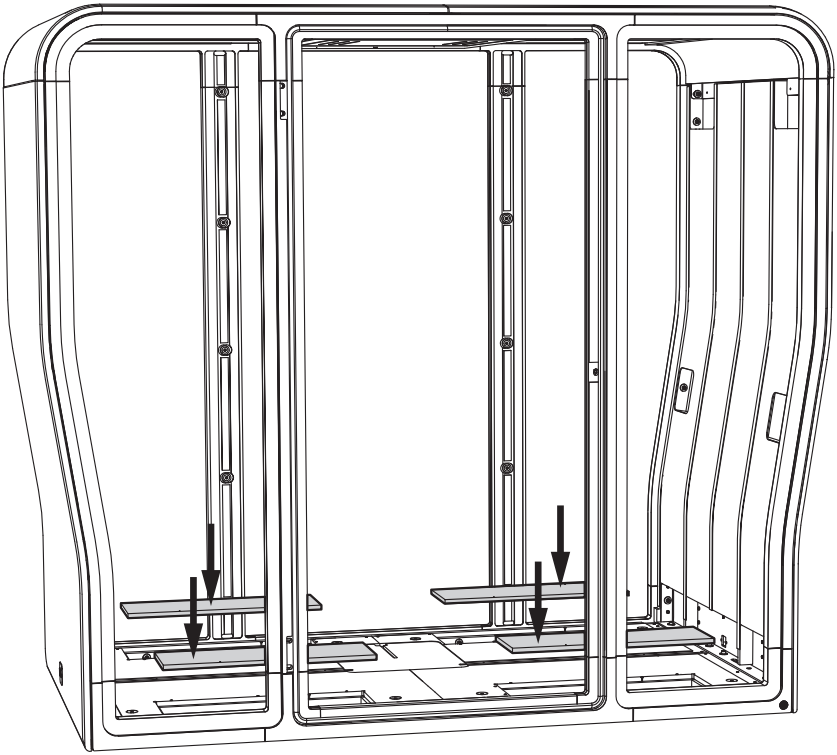

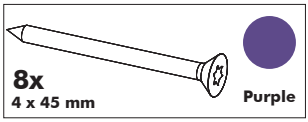


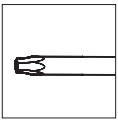

# 28

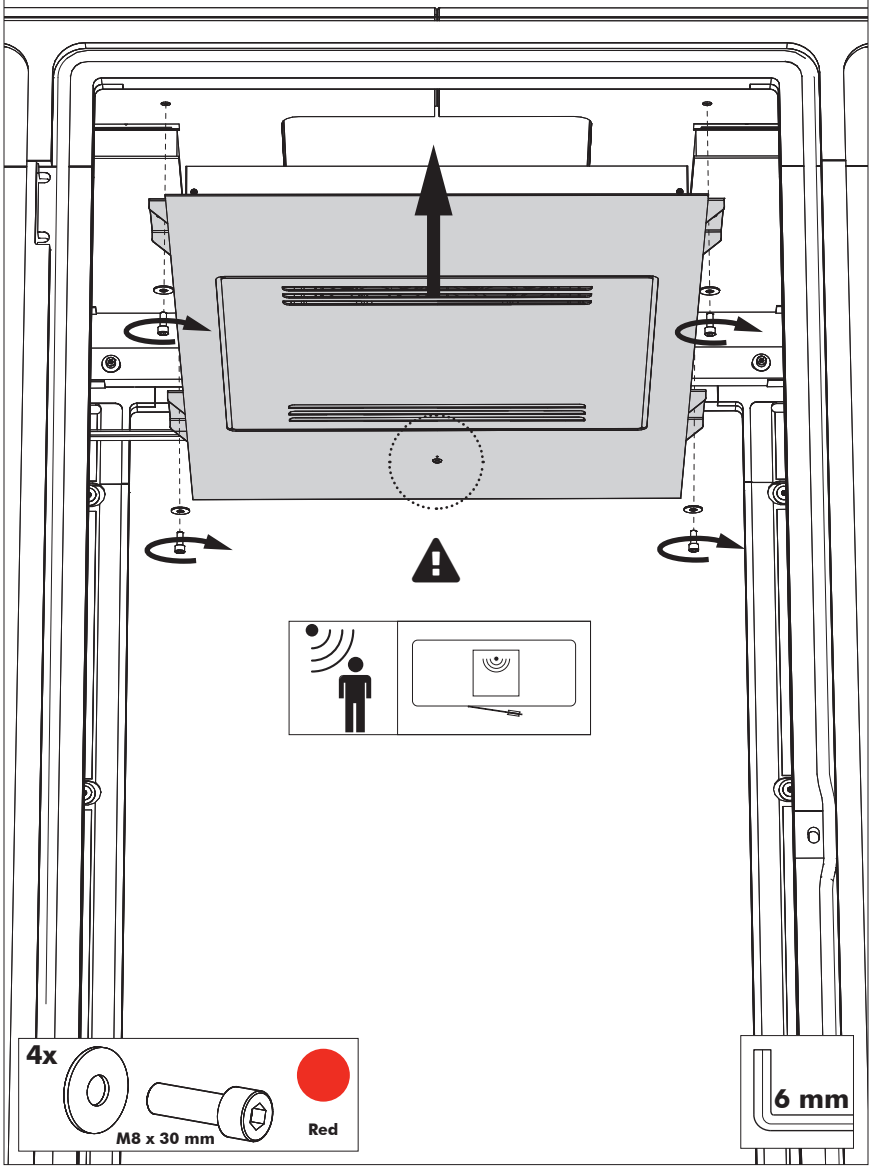

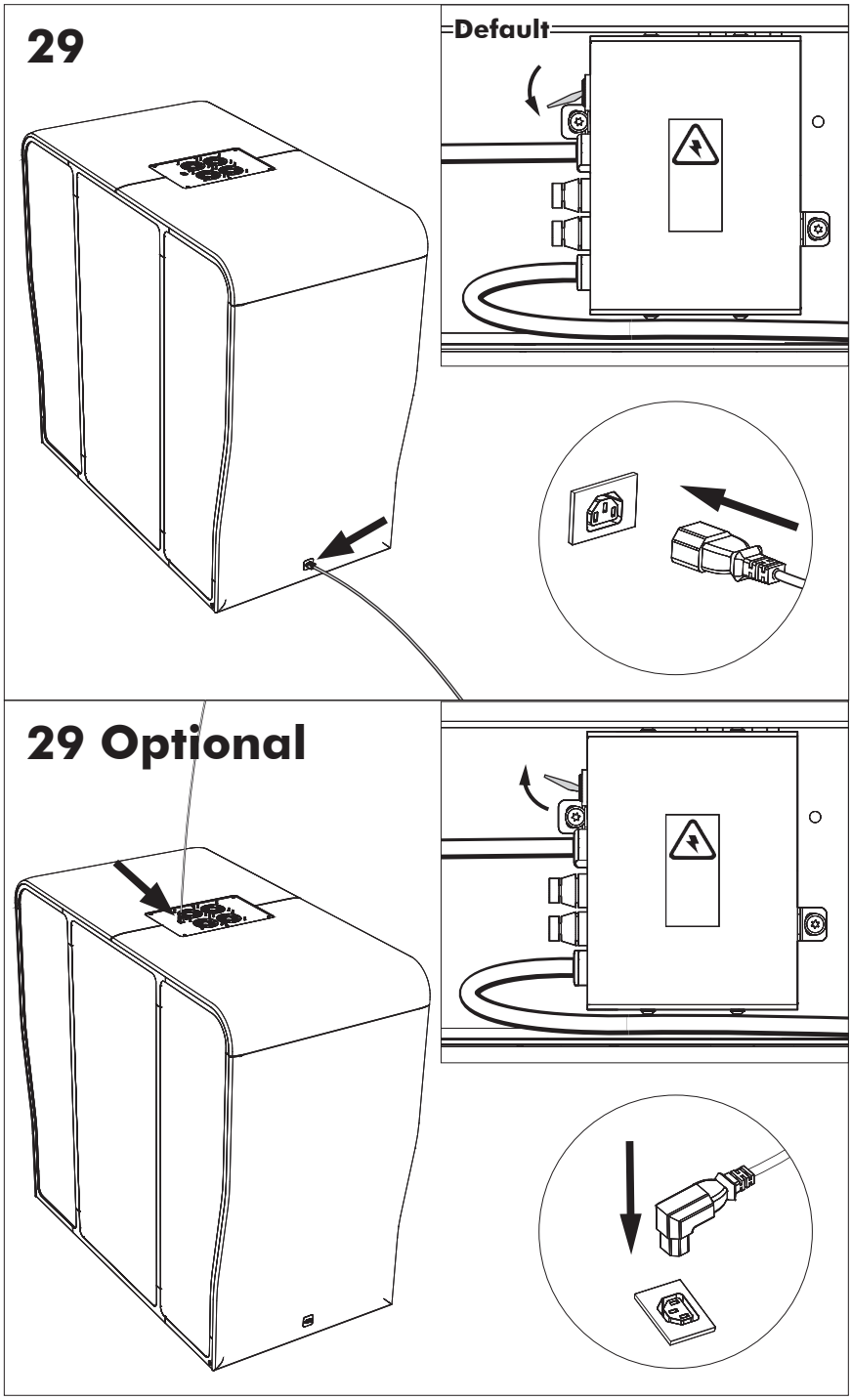
29
Default
29 Optional

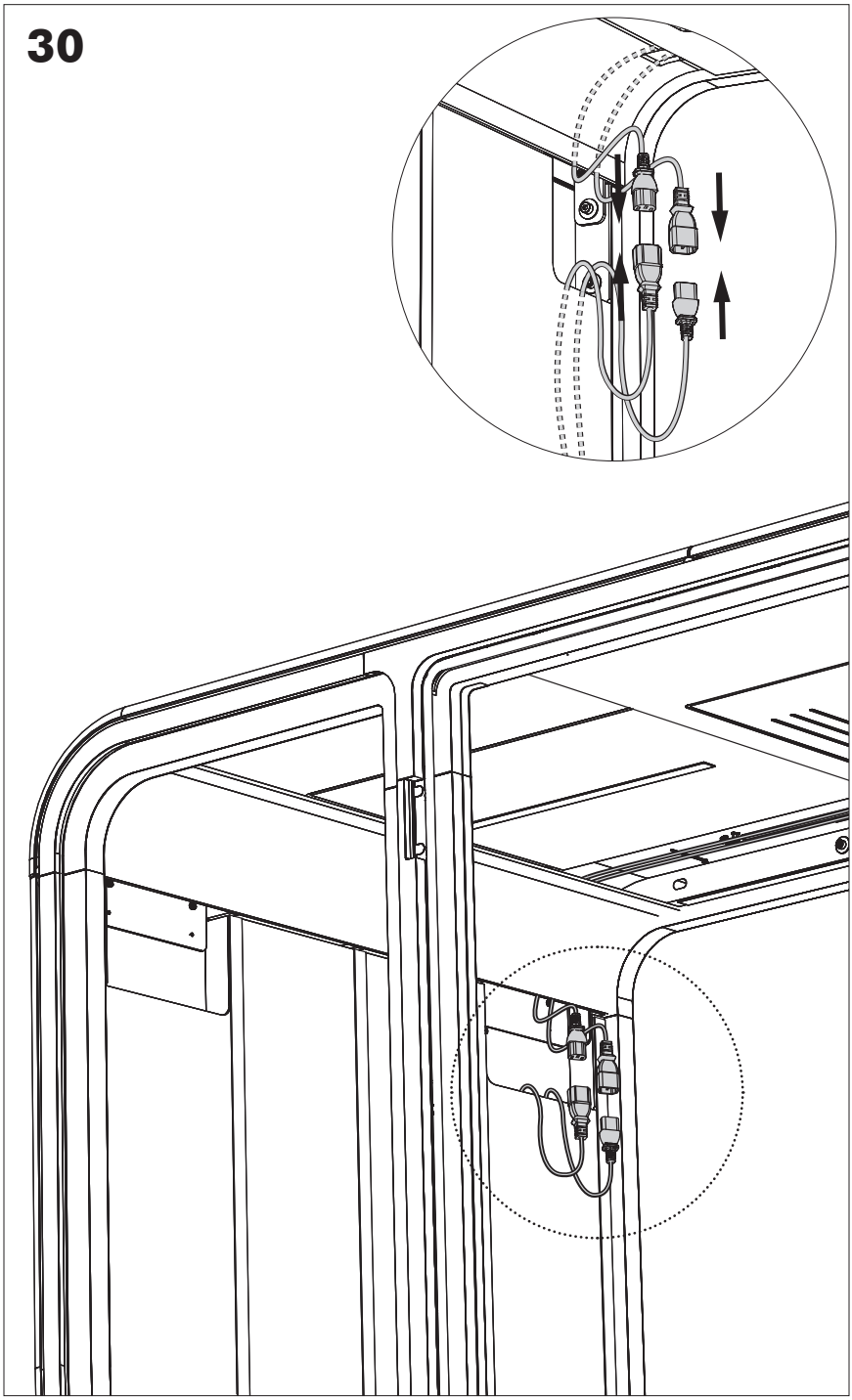
30

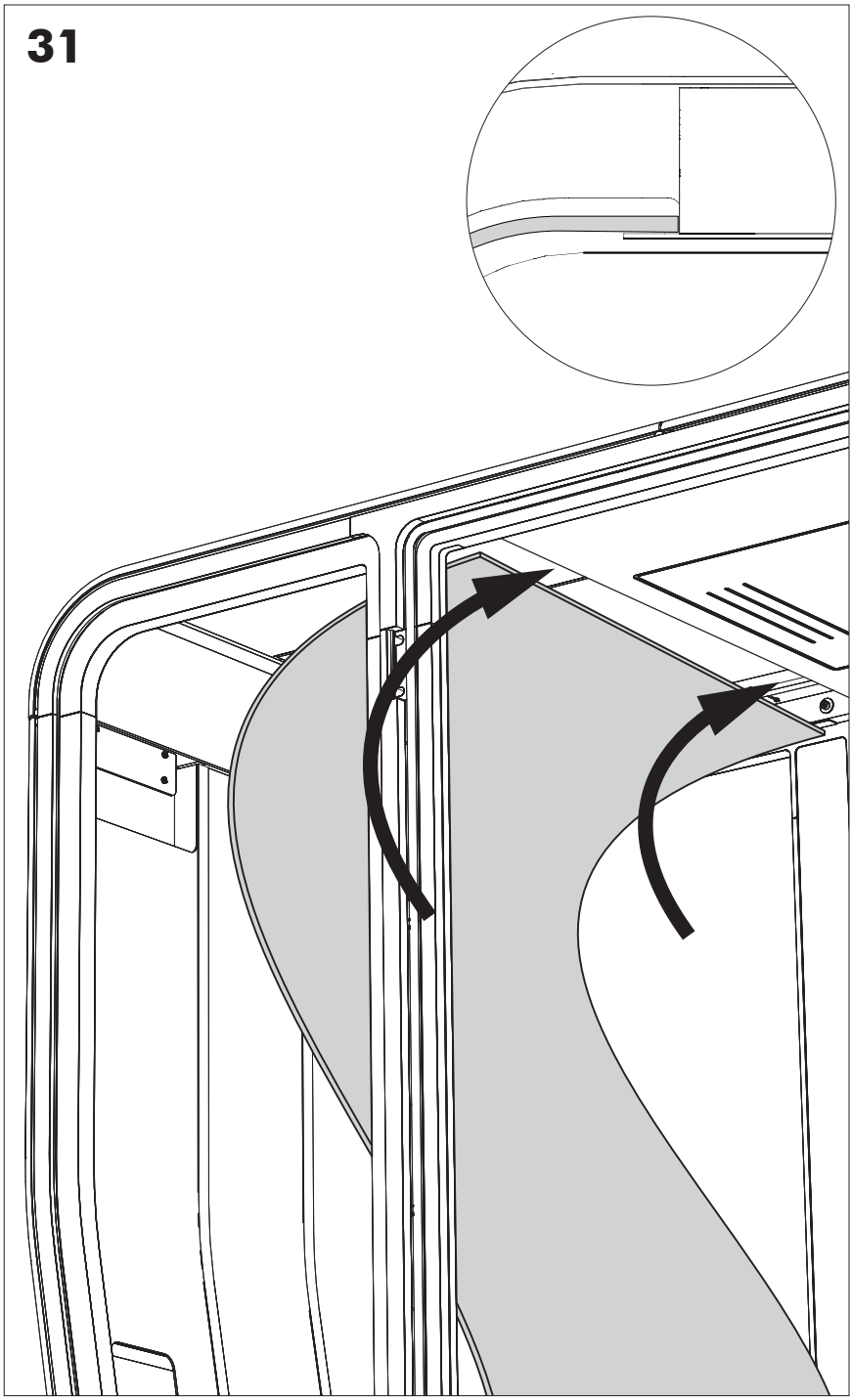
31

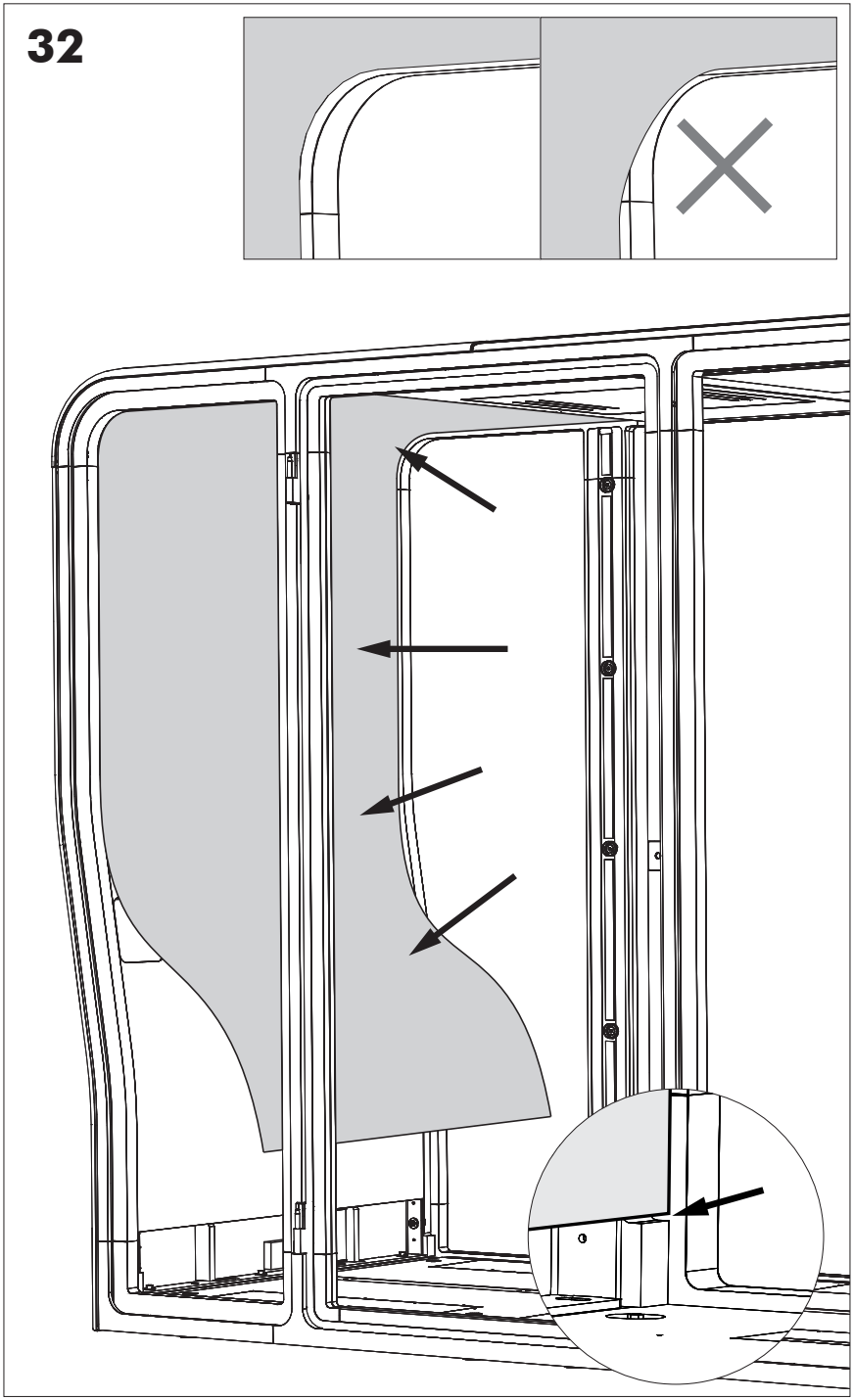
32

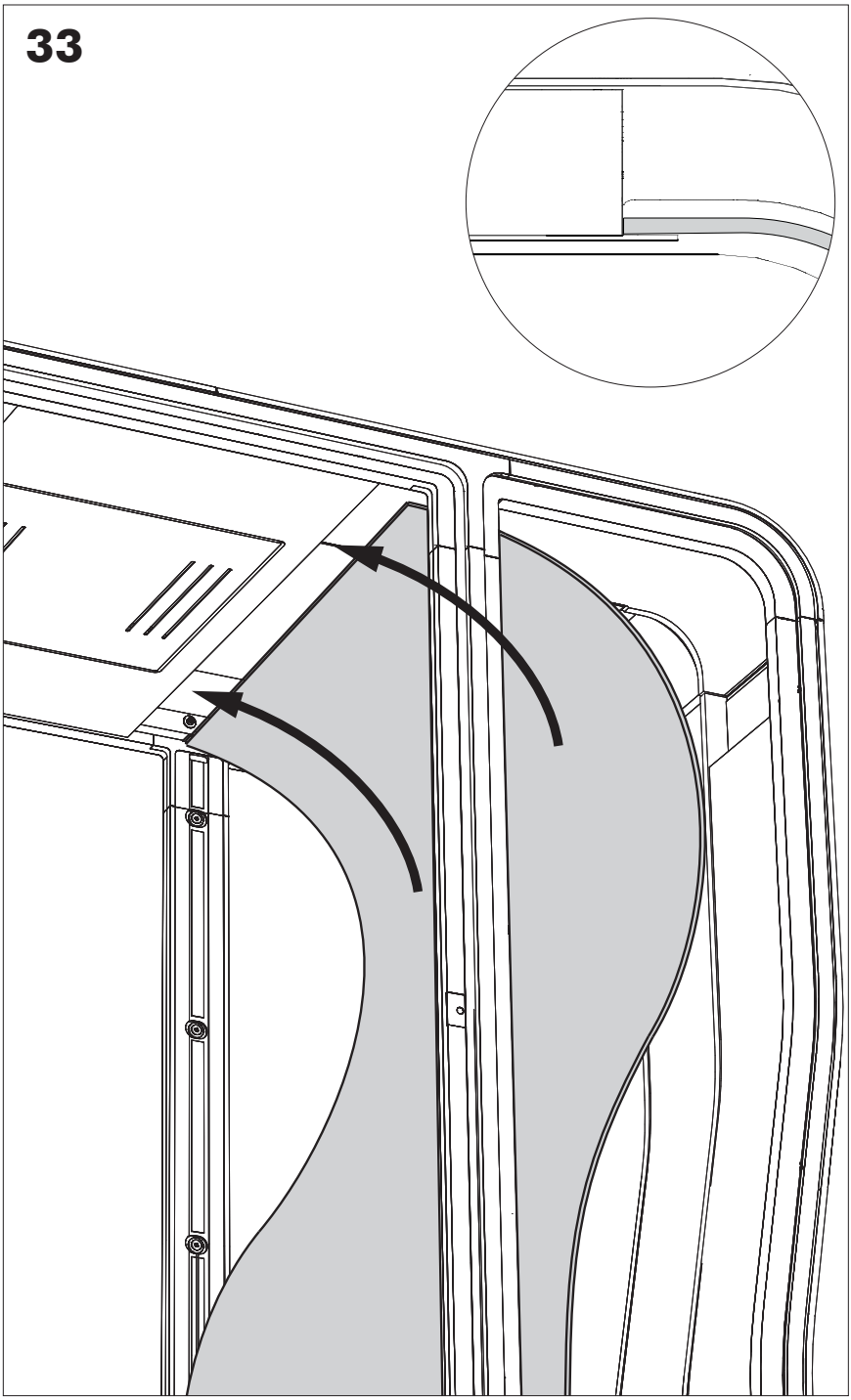
33

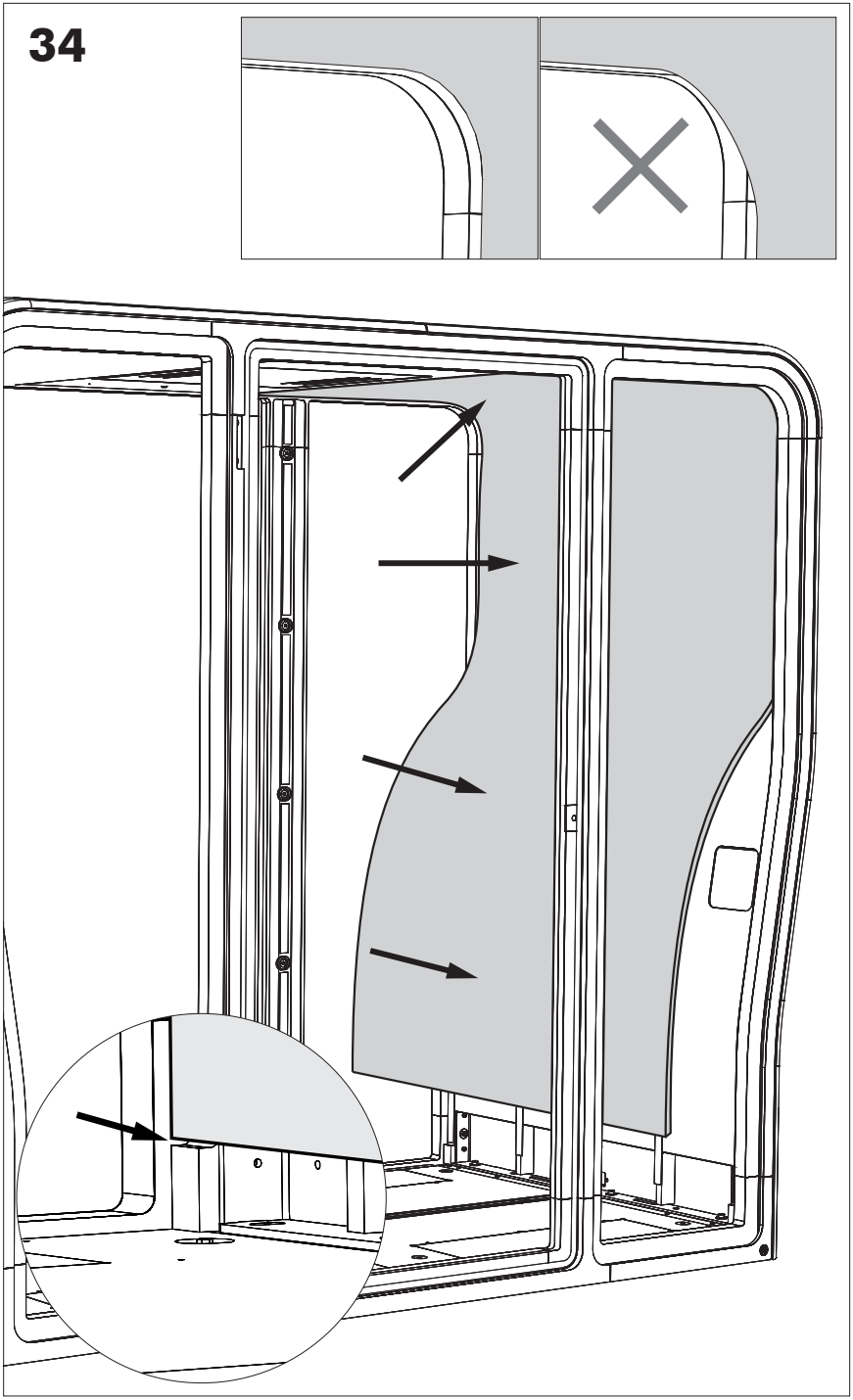
34

# 35

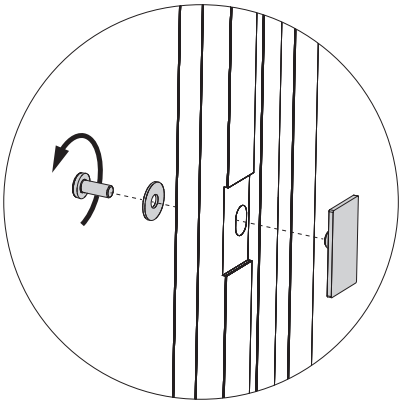

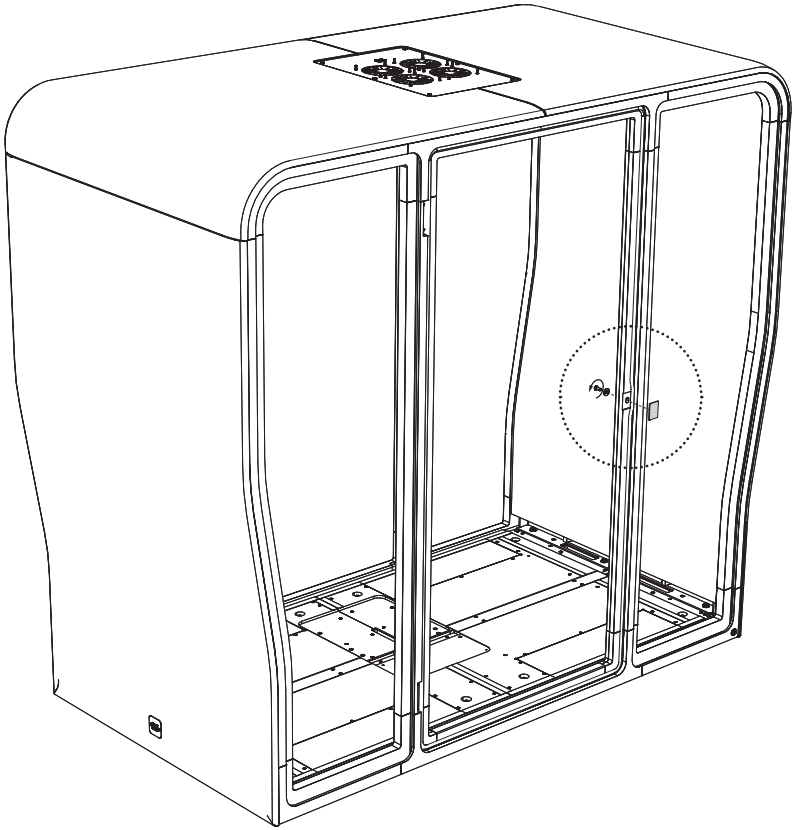

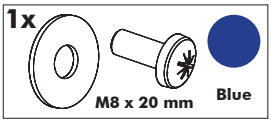


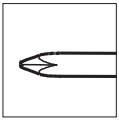

# 36

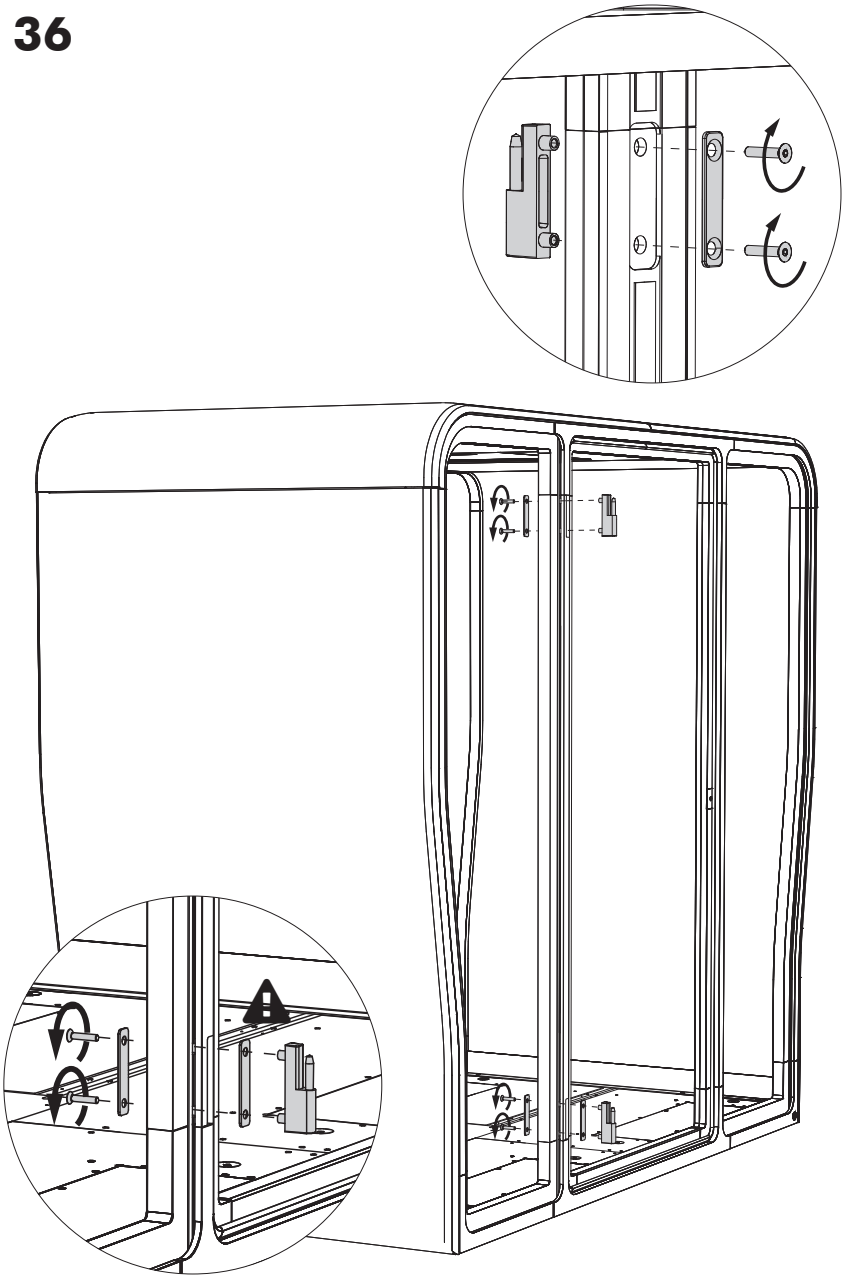

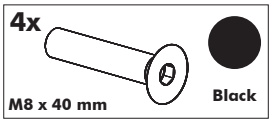

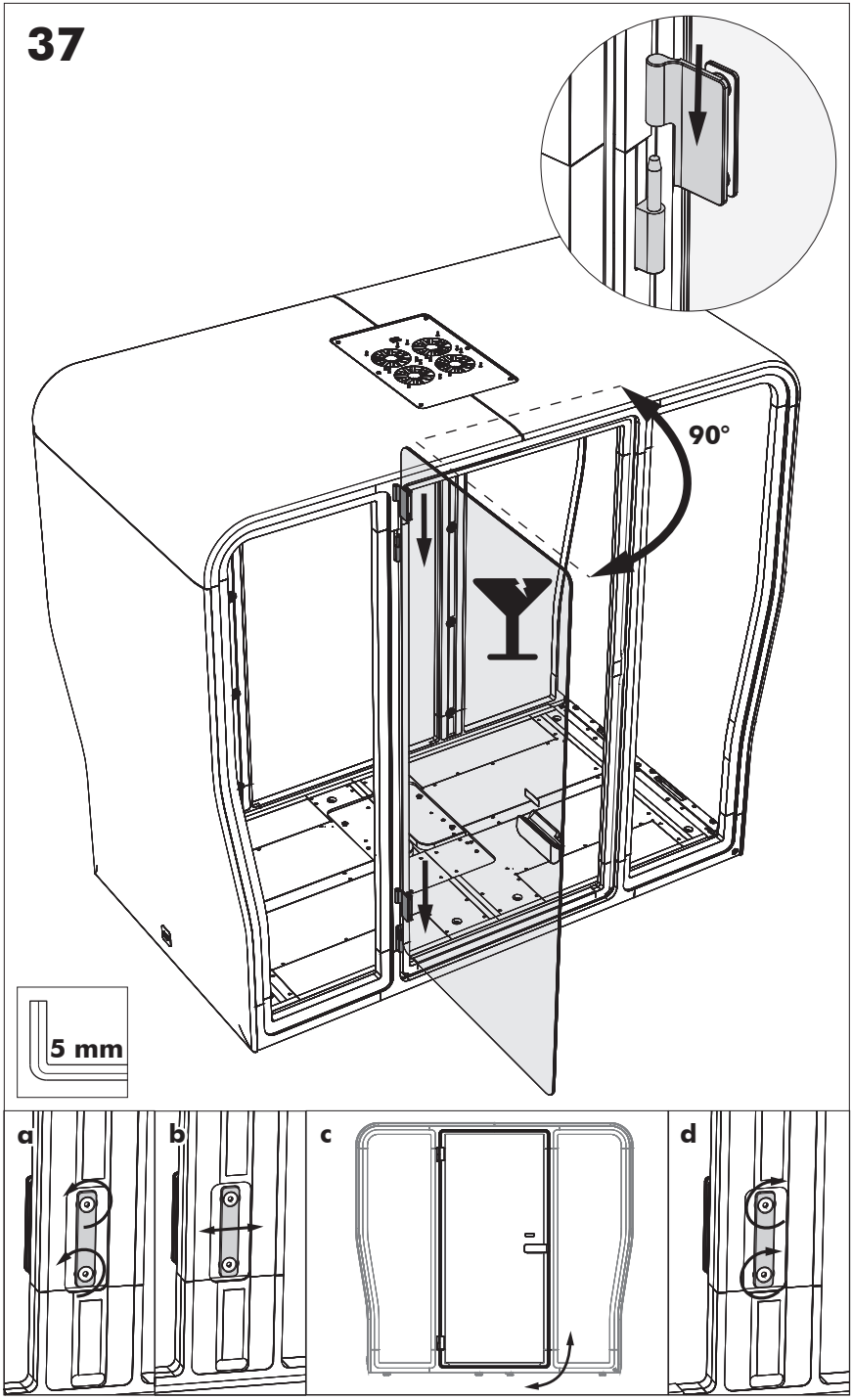
37
90°
5 mm
a
b
c
d

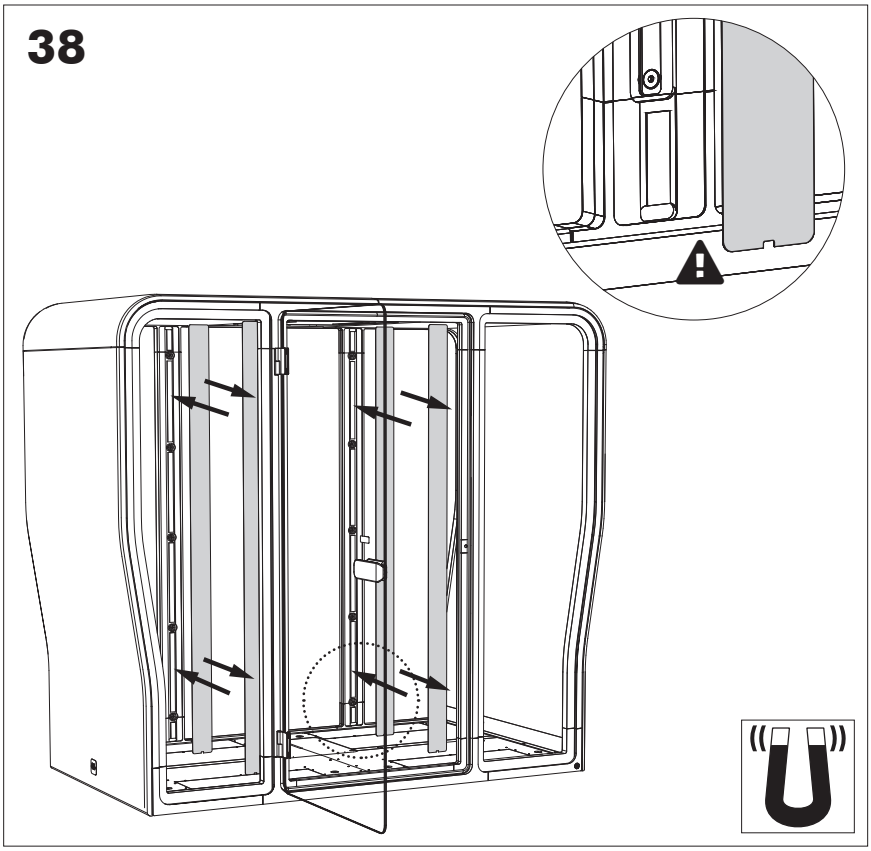
38

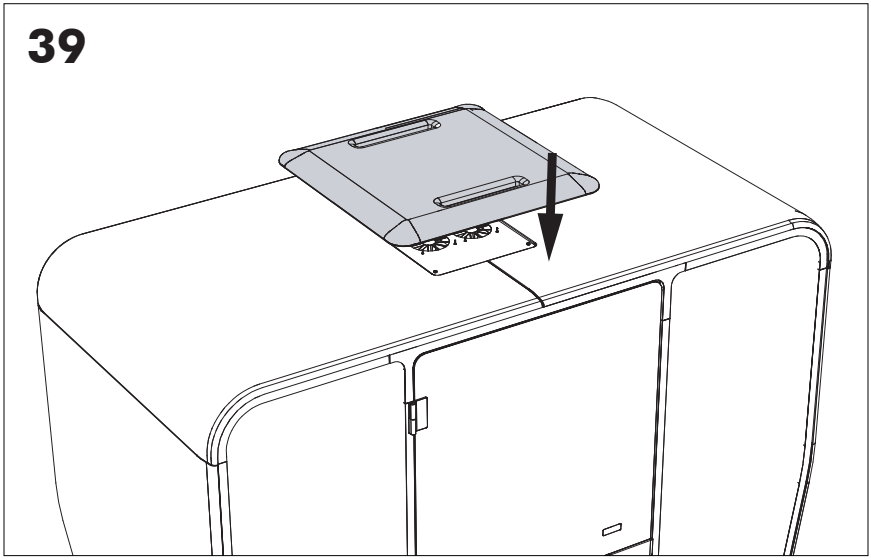
39

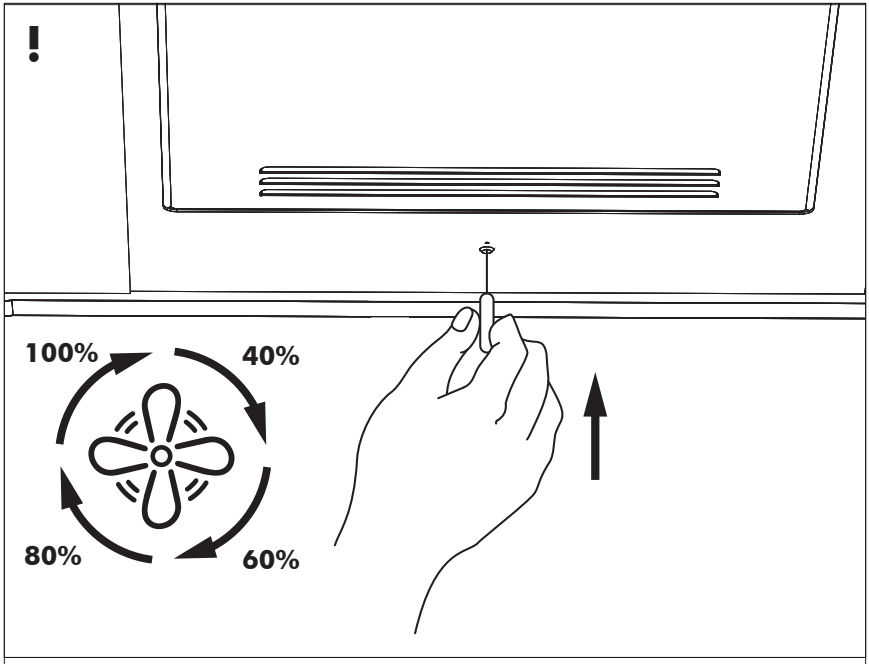


**Change the default airflow rate during occupancy:**
Press the button underneath the discrete hole next to the PIR motion detector using a pin to cycle through the various fan settings.

The LED Lighting blinks briefly when changing to a next setting.
The LED Lighting blinks twice when reaching the 40% setting.

**Fan Settings**
100%: 31 l/sec
80%: 25 l/sec
60%: 20 l/sec (factory setting)
40%: 12 l/sec

## No table P.43

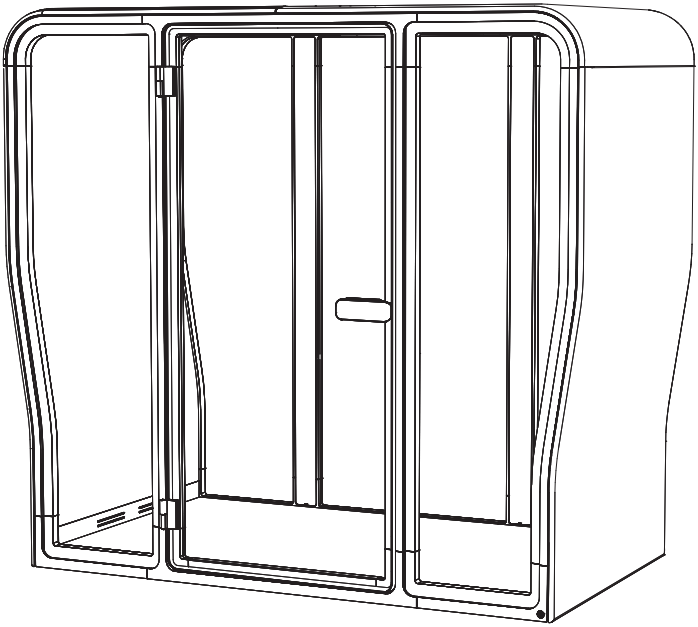

## Optional Table + Electrification P.48

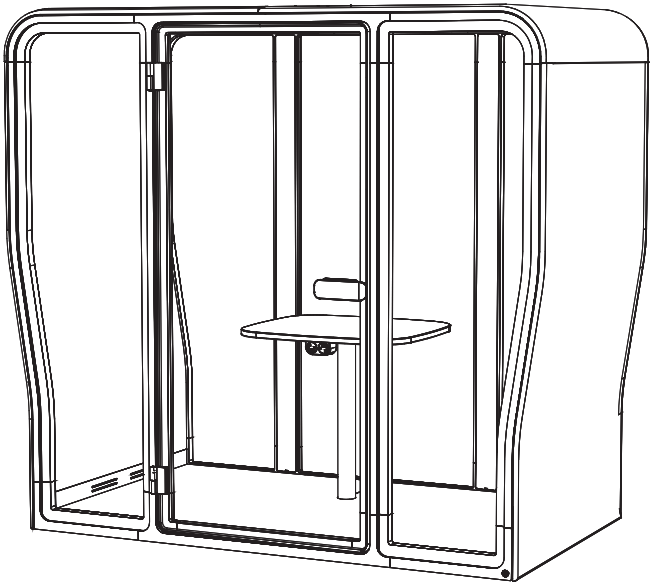

## No table

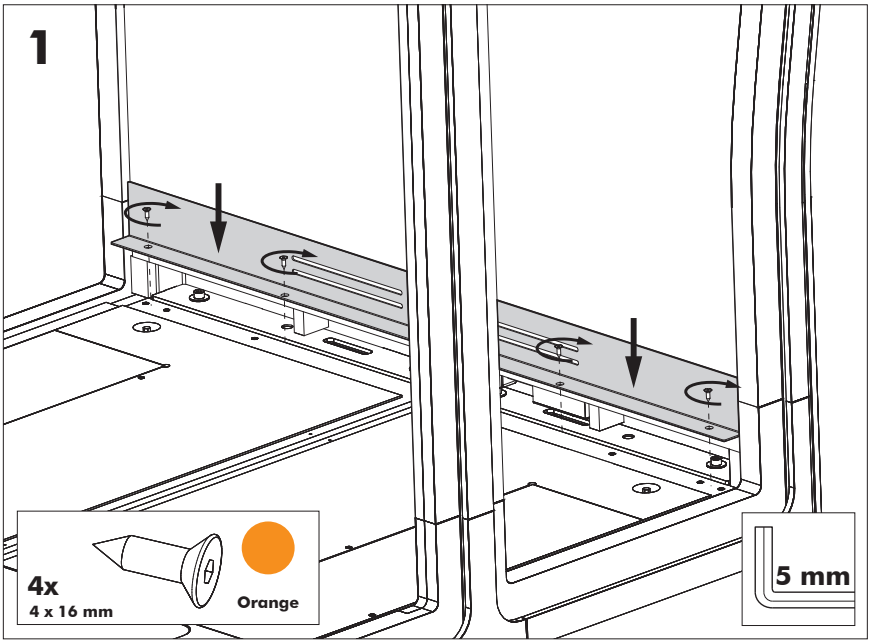


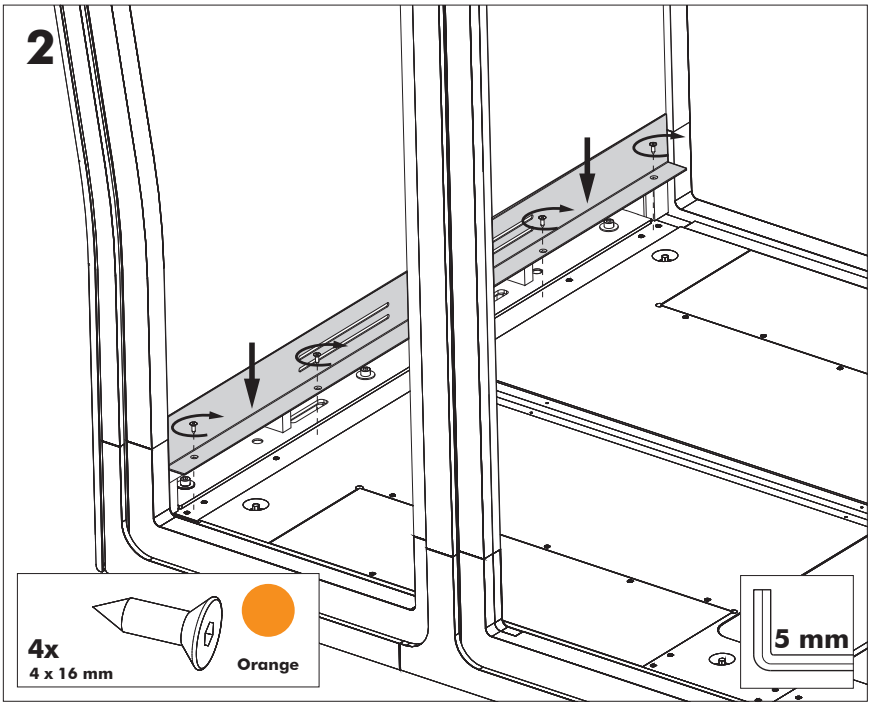

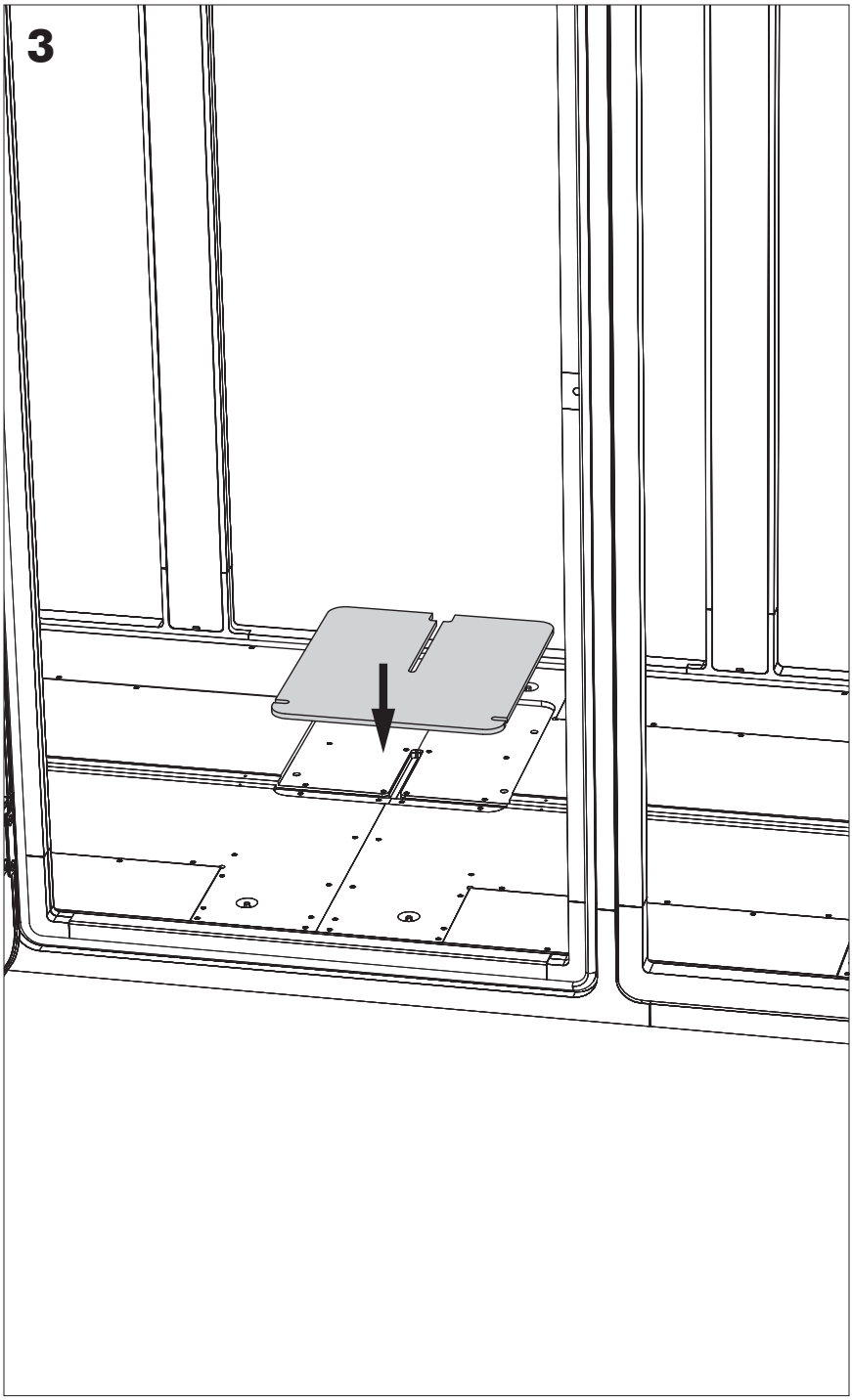
3

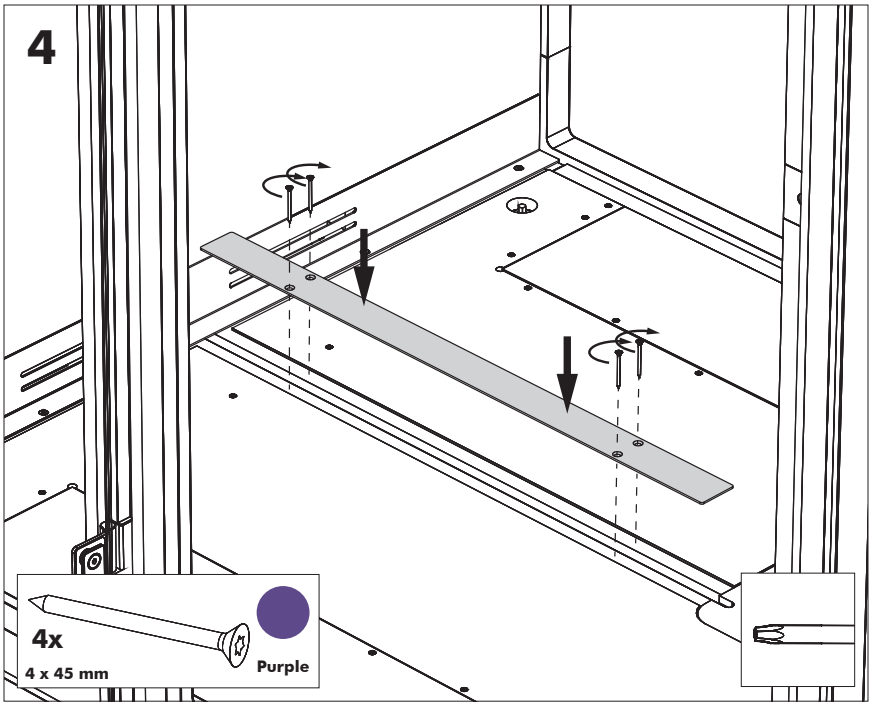
4
4x
4 x 45 mm
Purple

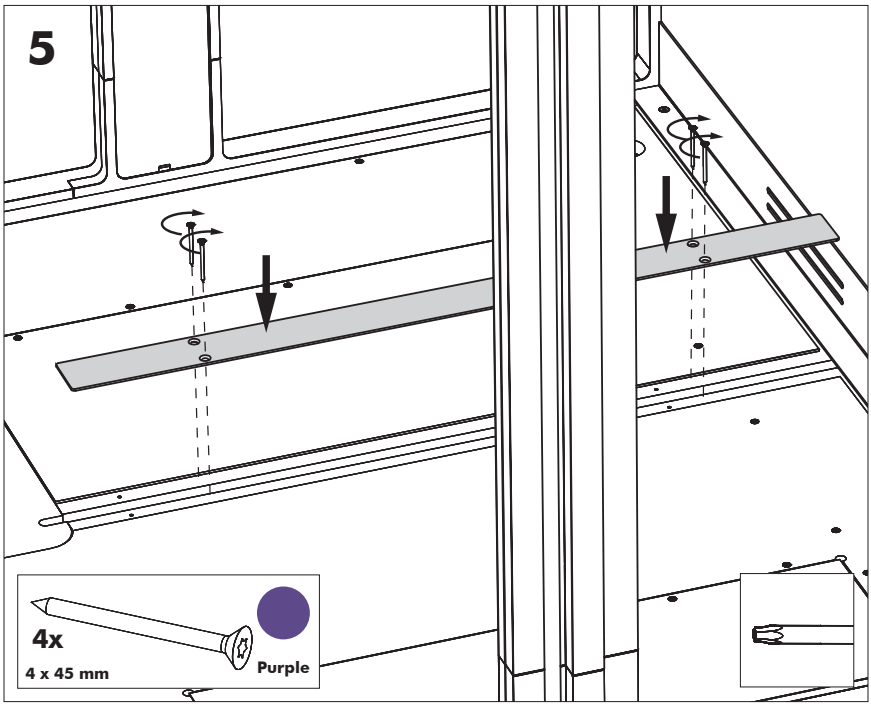
5
4x
4 x 45 mm
Purple

**6**

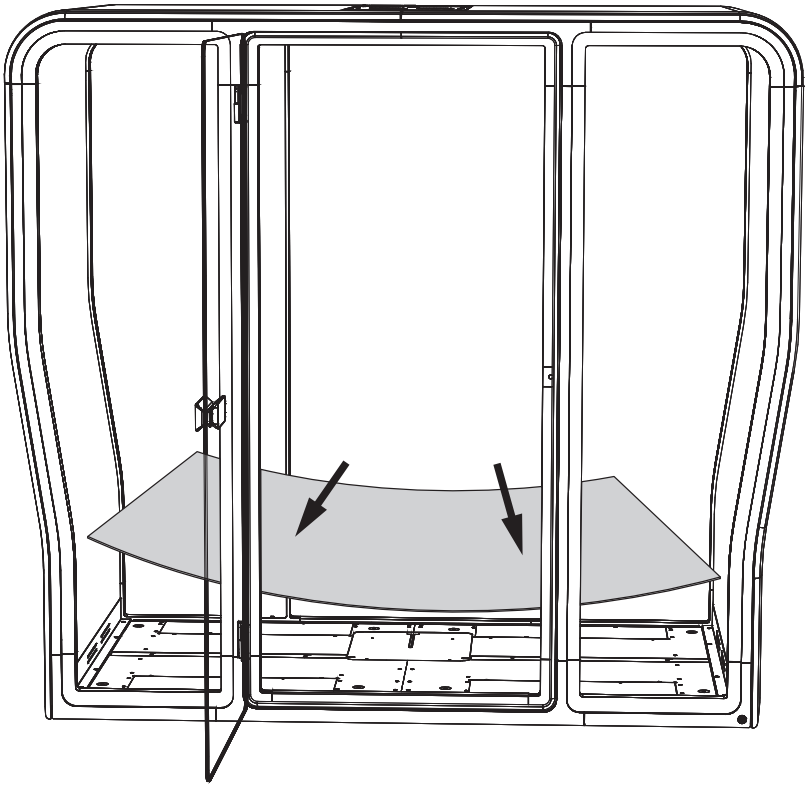

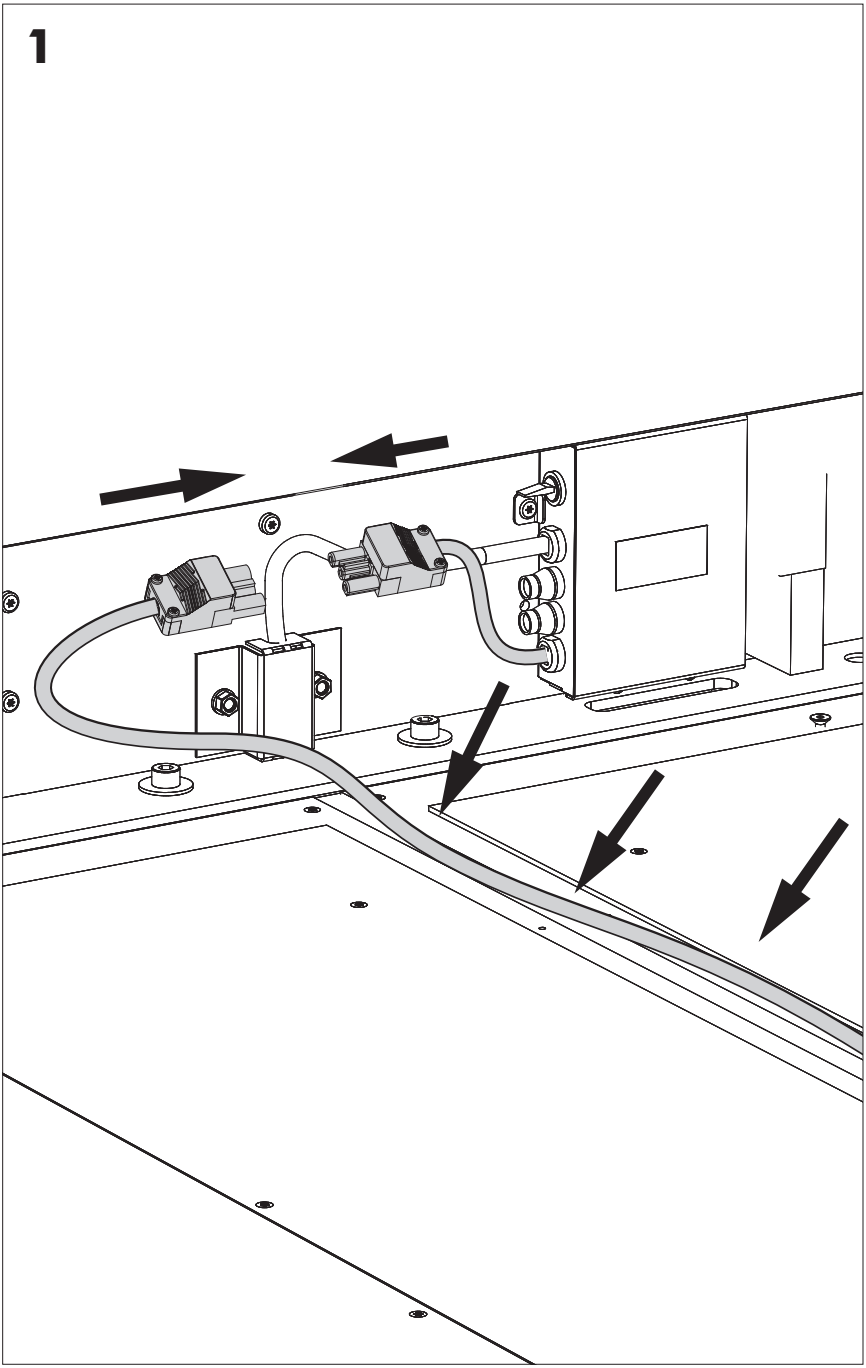
1

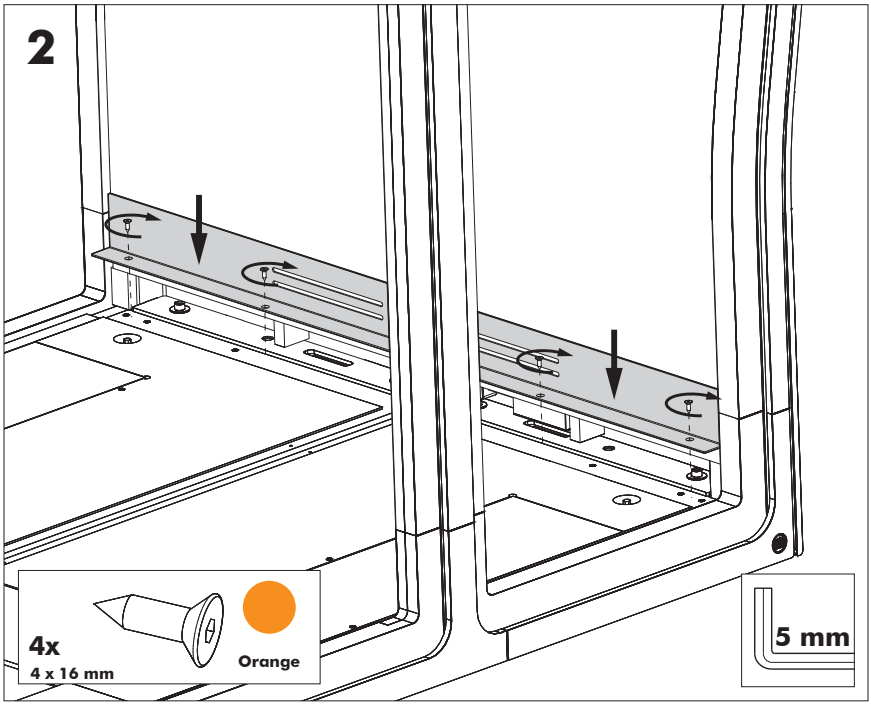
2
4x
4 x 16 mm
Orange
5 mm

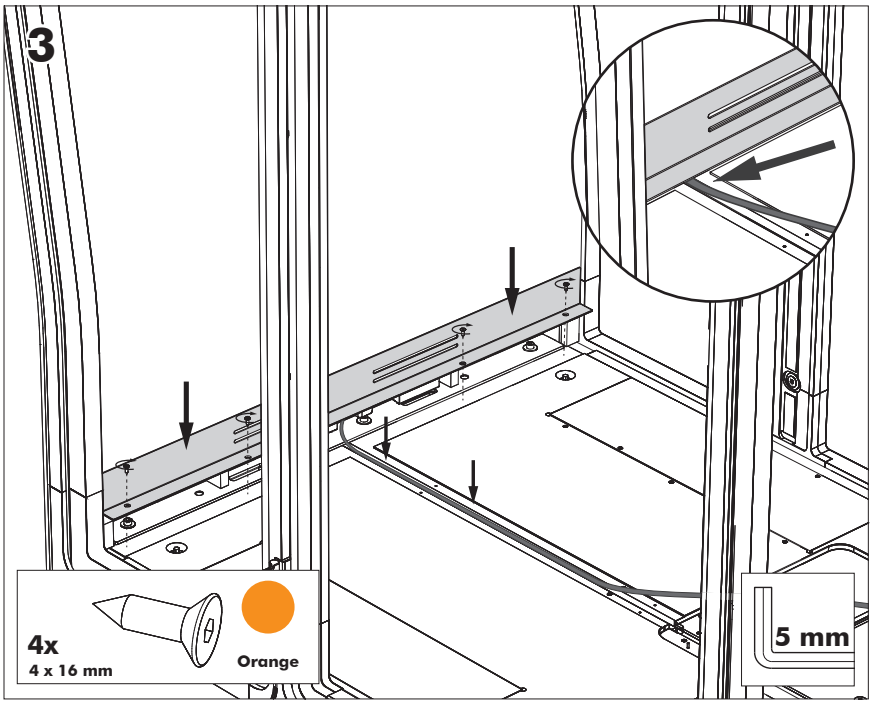
3
4x
4 x 16 mm
Orange
5 mm

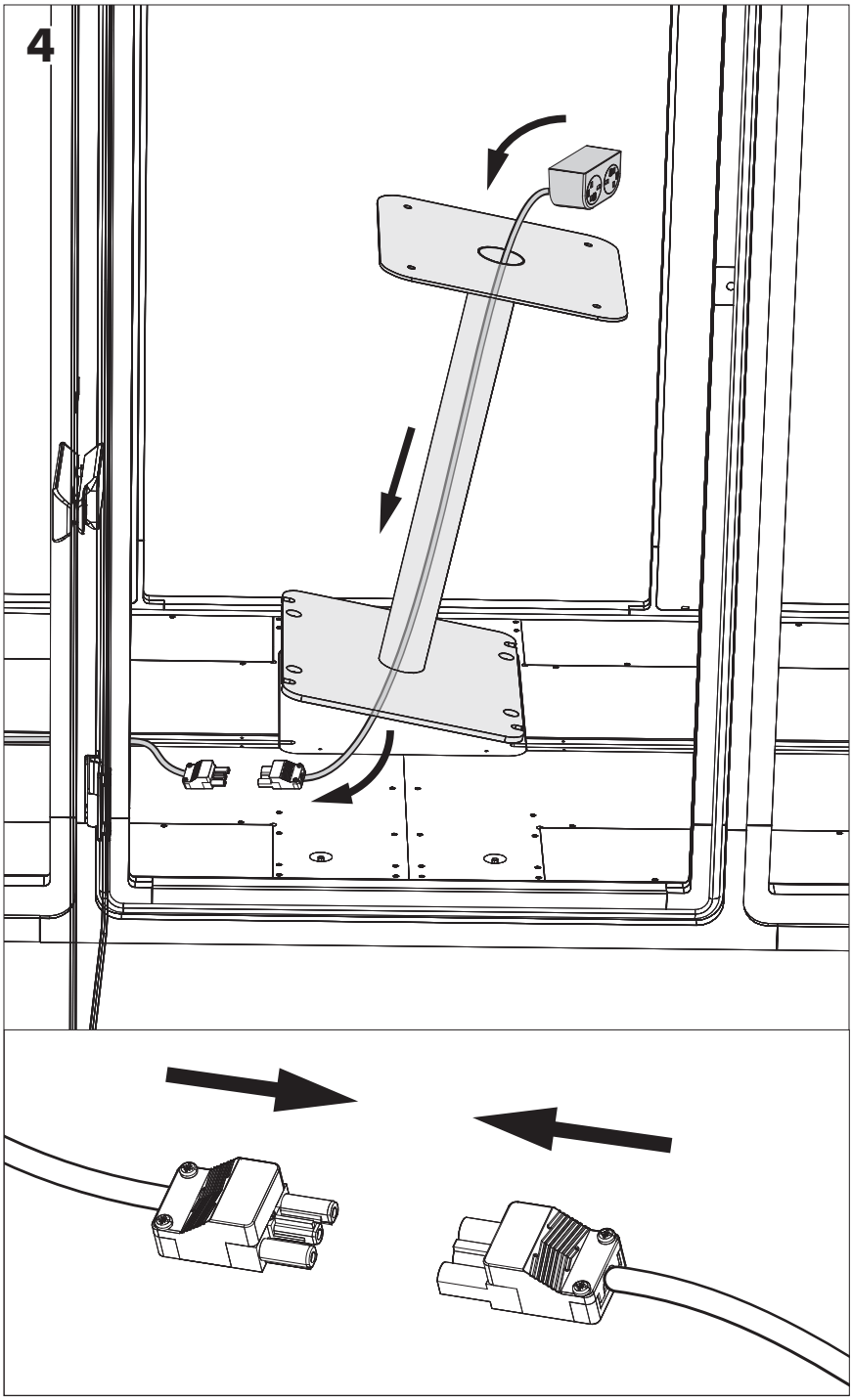
4

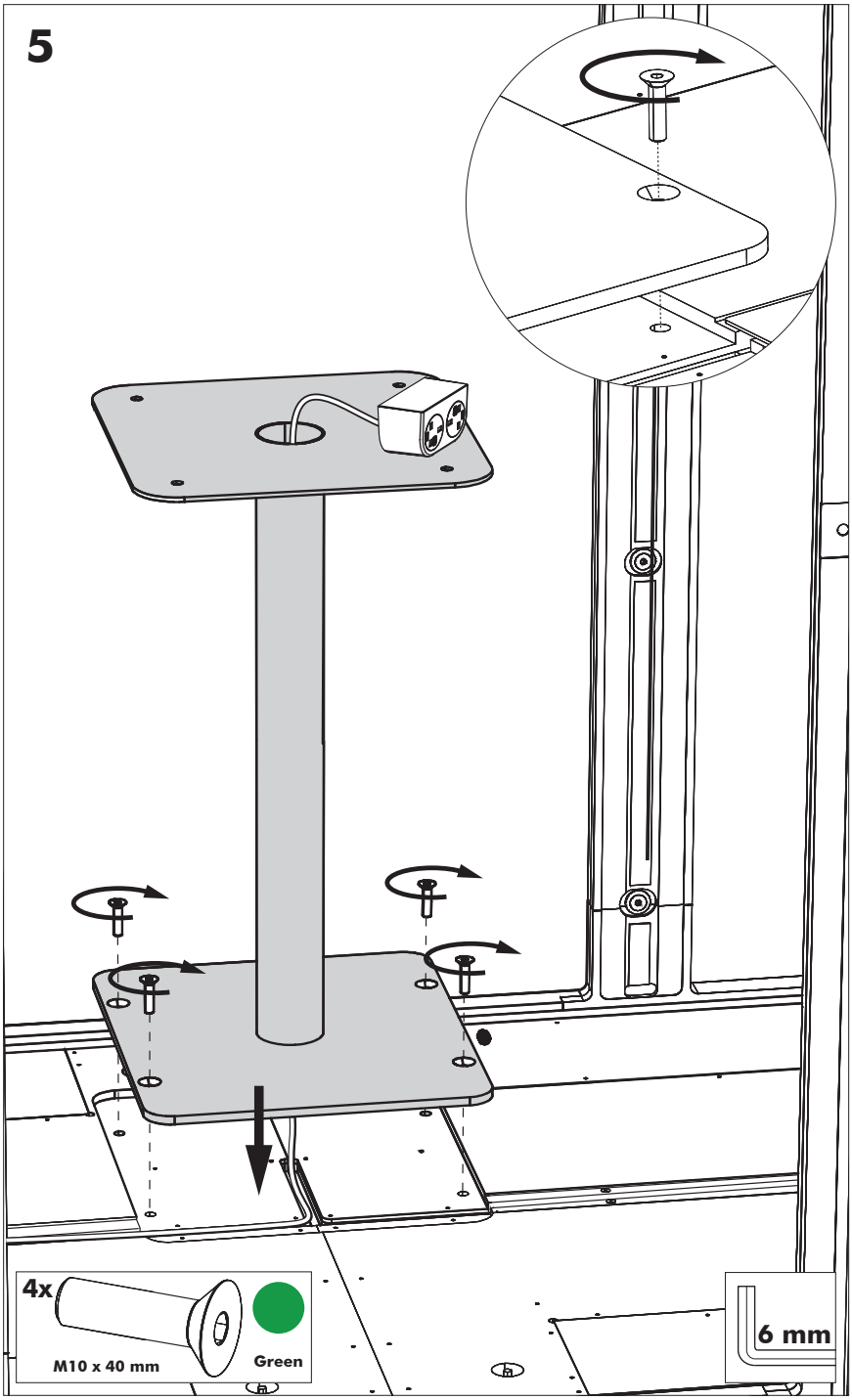
5
4x
M10 x 40 mm
Green
6 mm

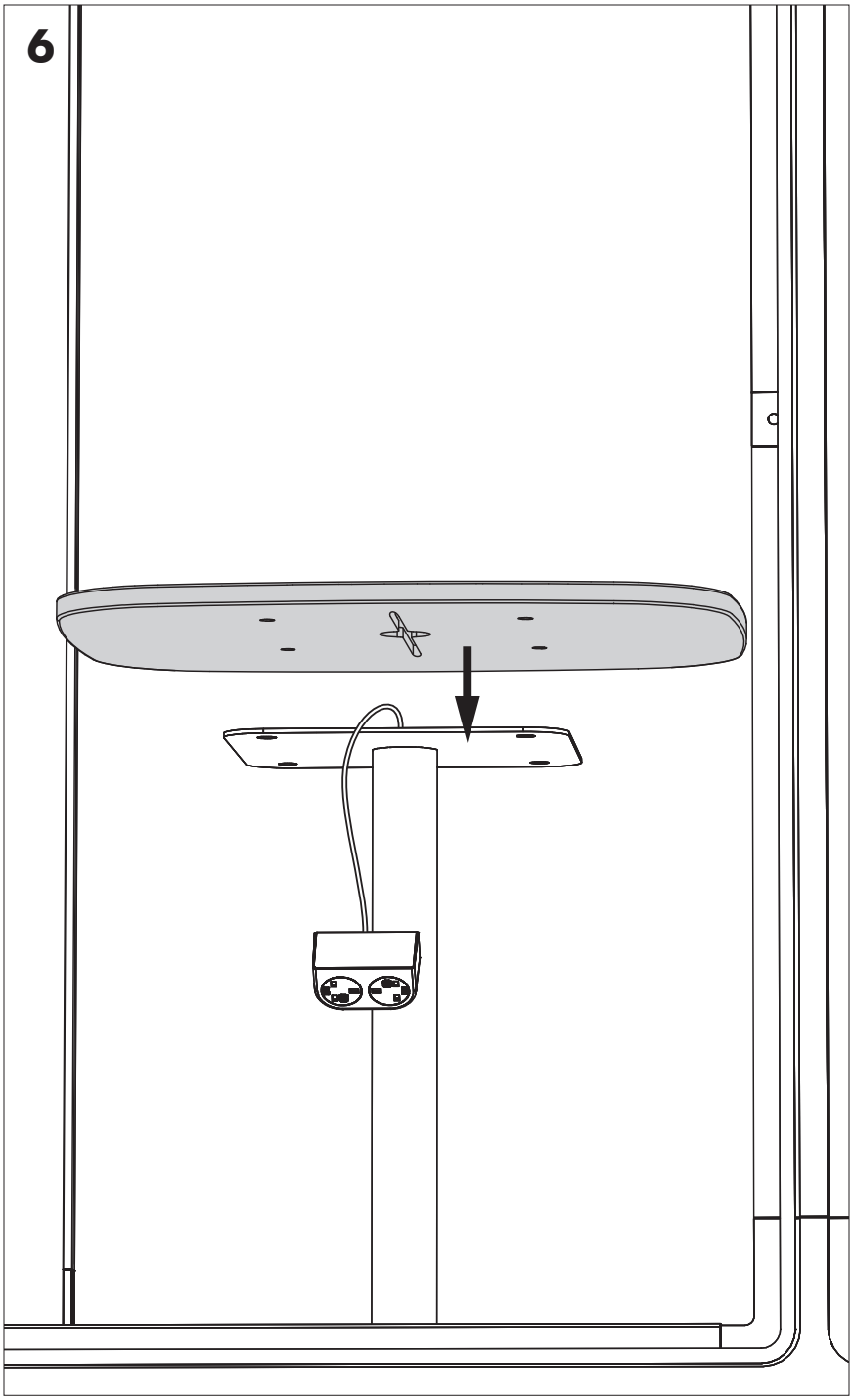
6

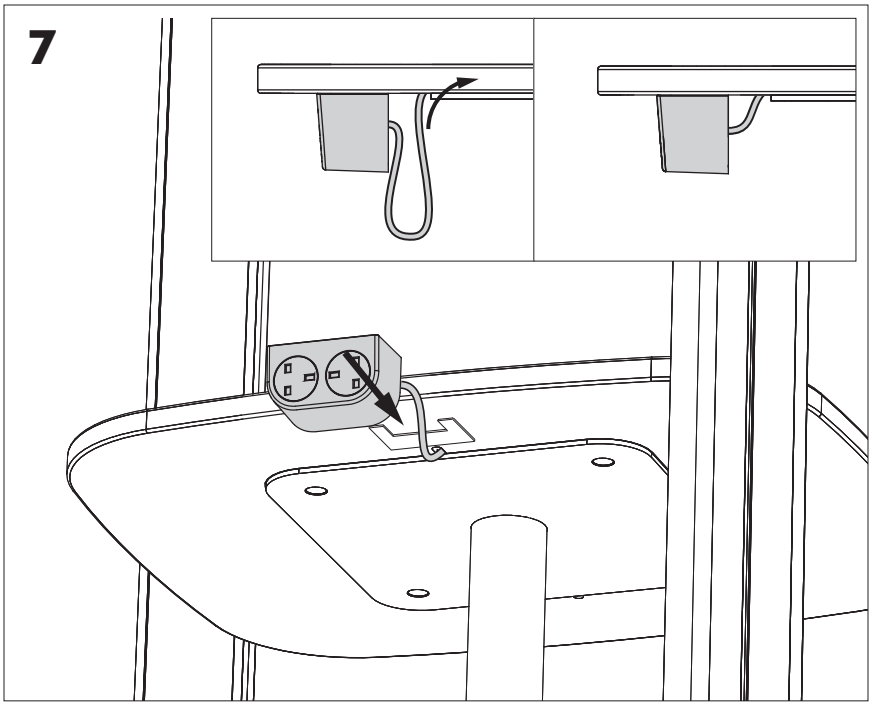
7

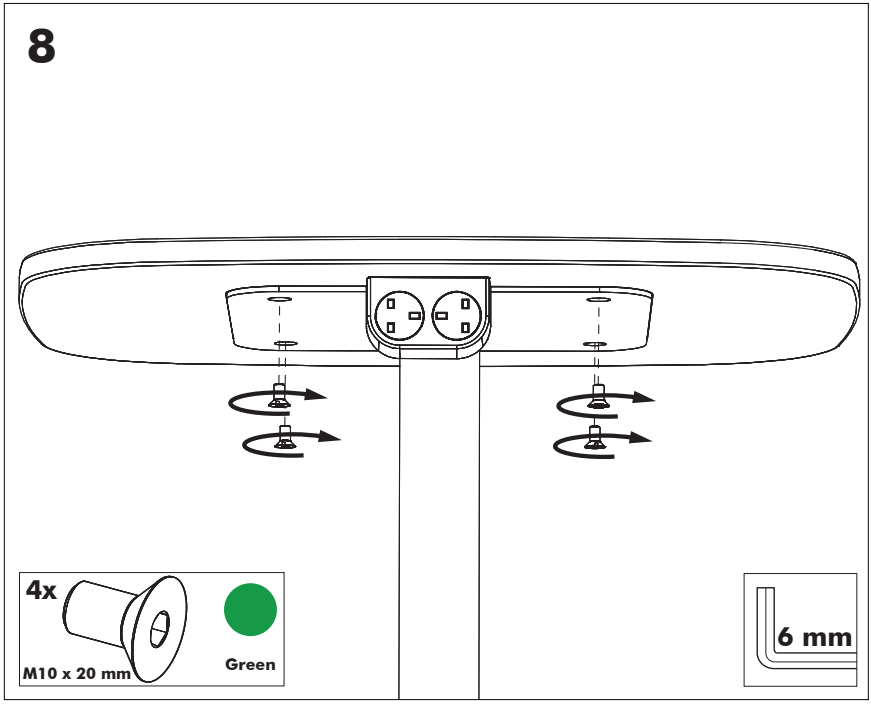
8
4x
M10 x 20 mm
Green
6 mm

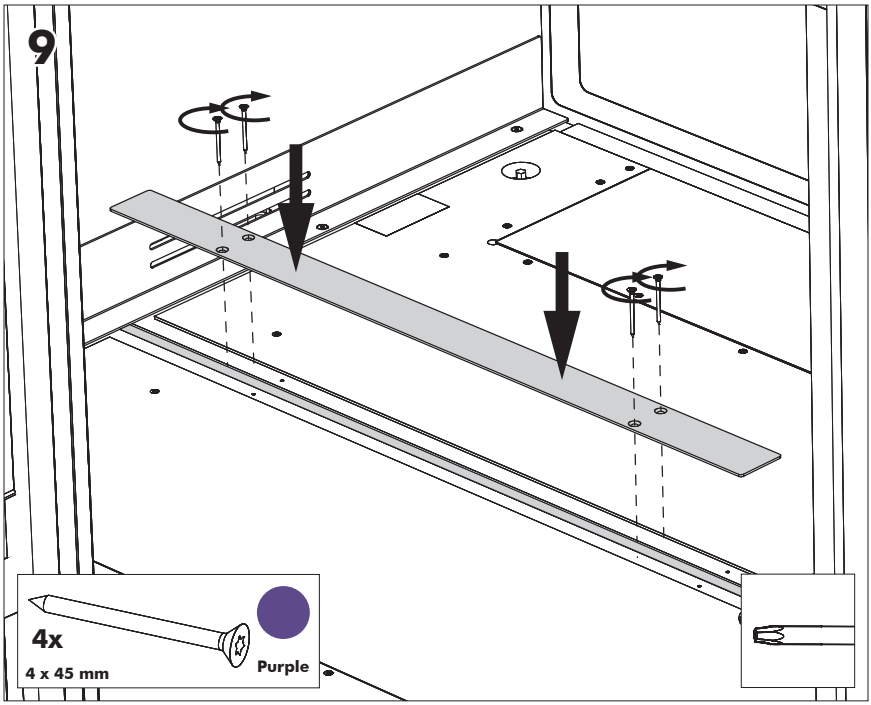
9
4x
4 x 45 mm
Purple

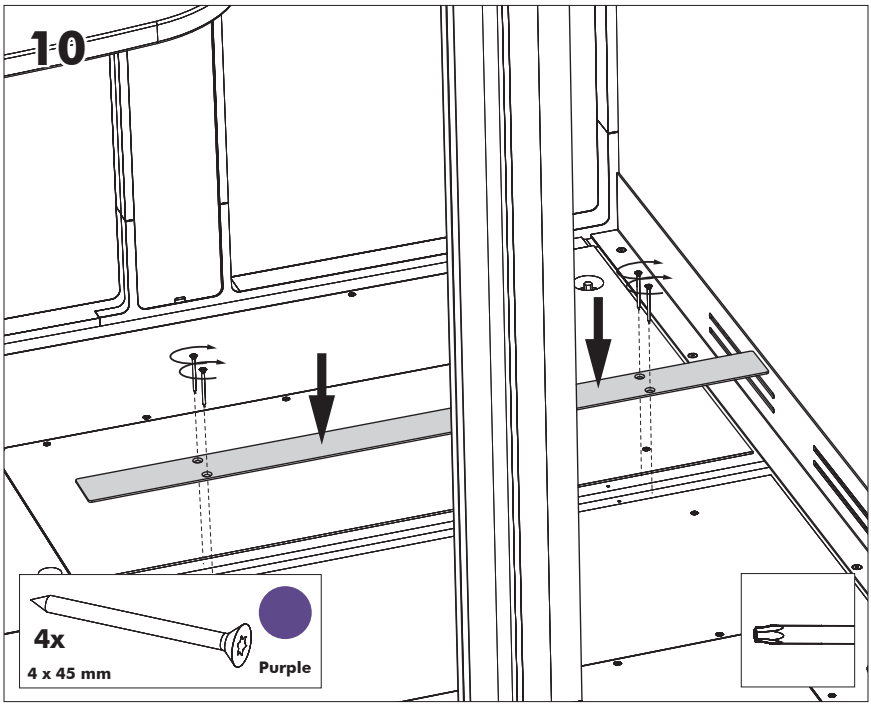
10
4x
4 x 45 mm
Purple

# 11

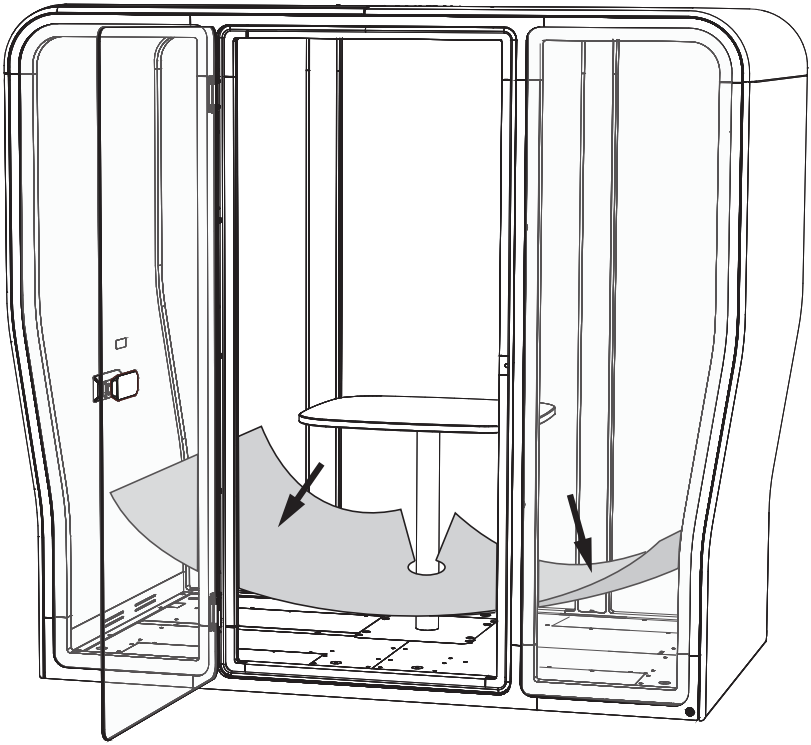

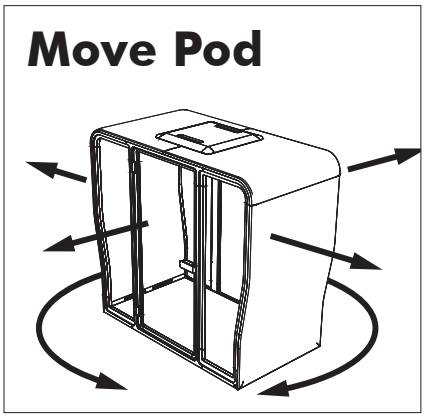
Move Pod

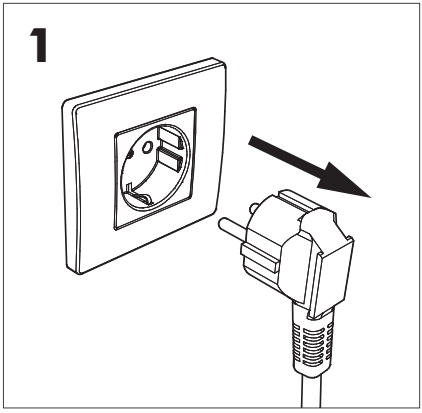
1

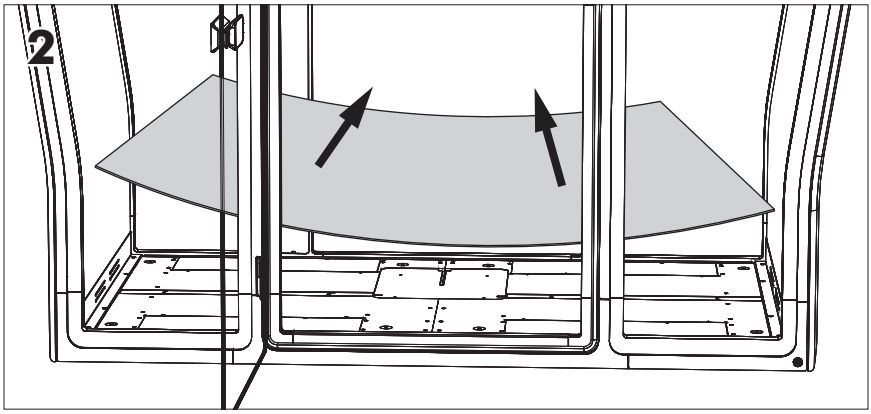
2

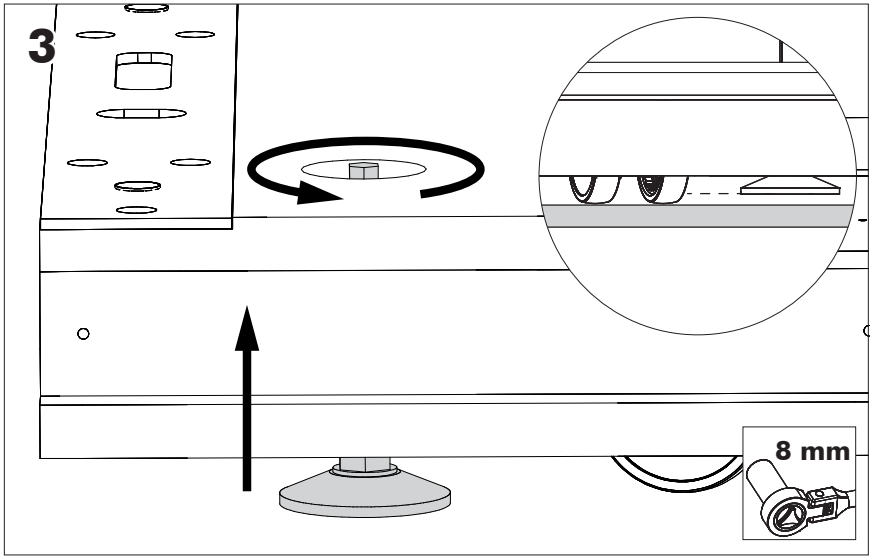
3
8 mm

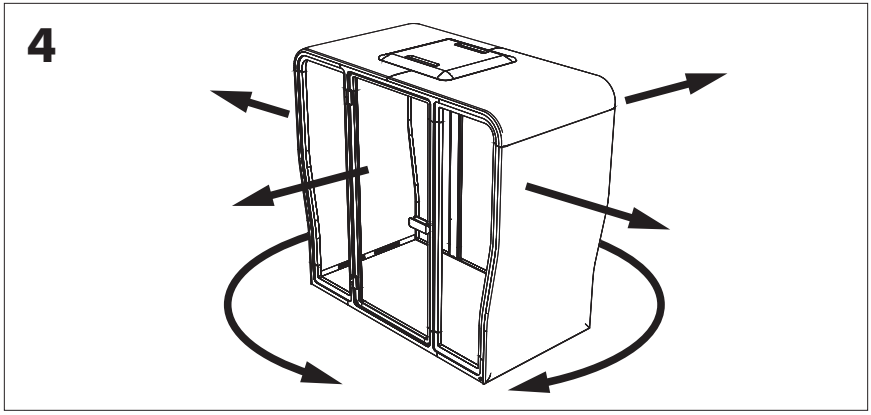
4

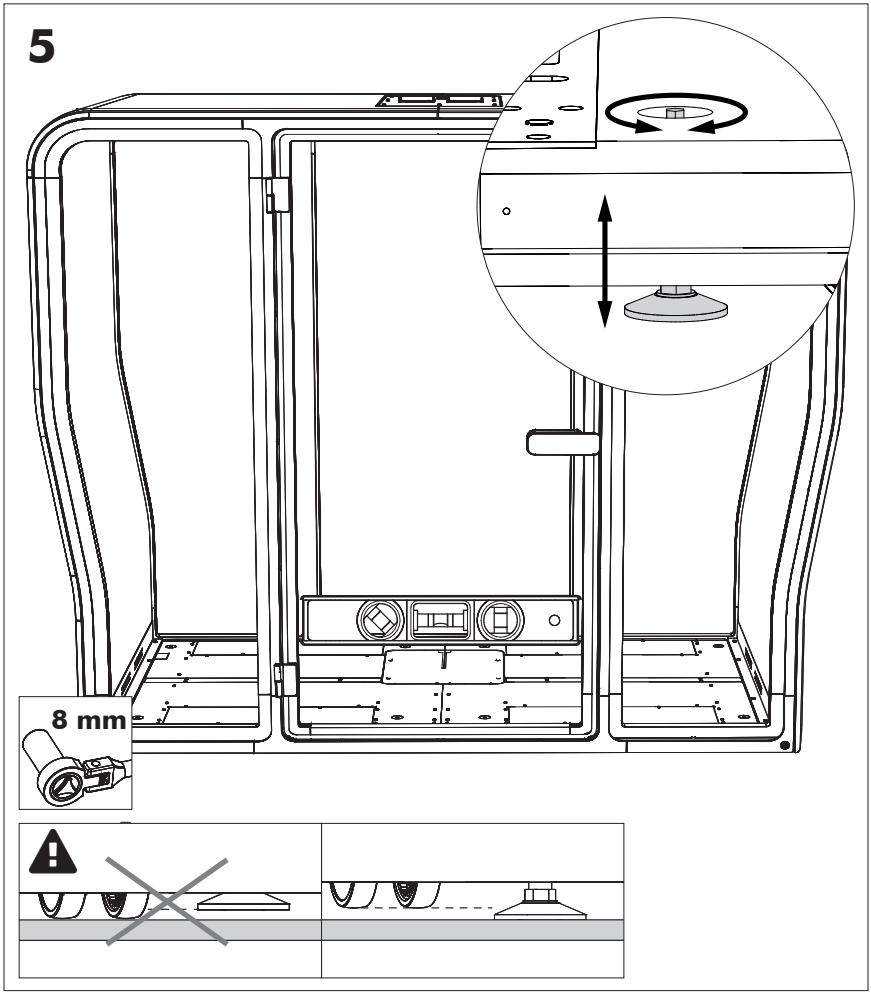
5
8 mm

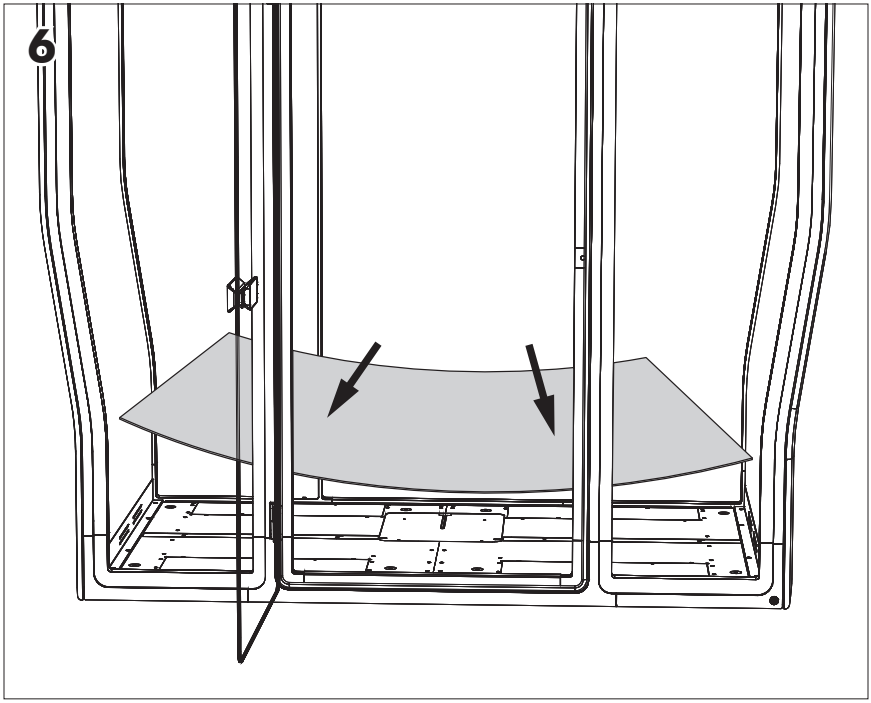
6

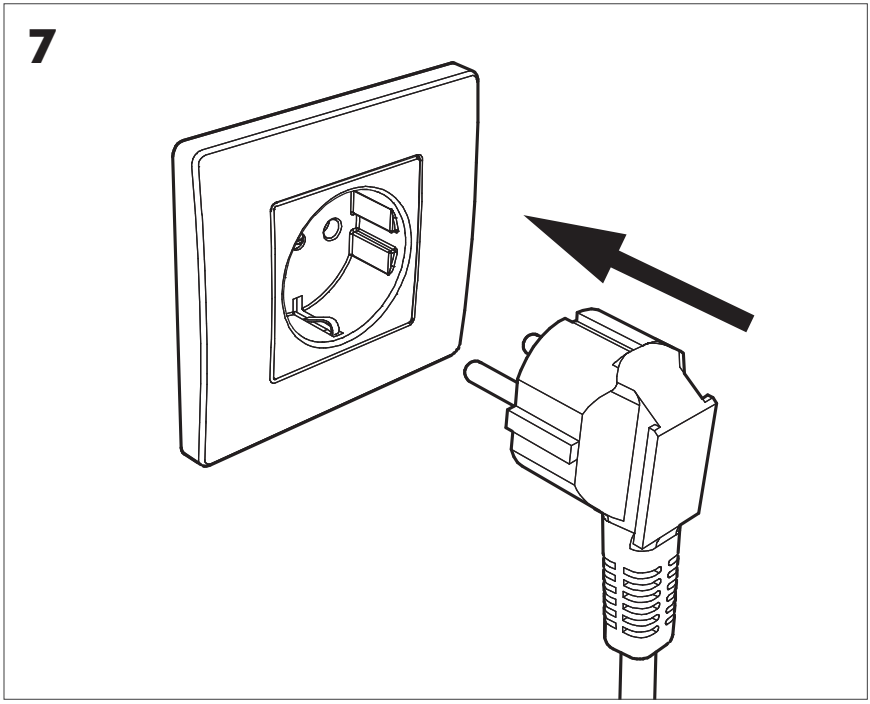
7

BuzziSpace Group NV
Italiëlei 8, 2000 Antwerp
Belgium
☎ +32 (0)3 846 10 00
info@buzzi.space
www.buzzi.space

Doc nr.: A-0000007319/04
Last update: 03/10/2024