# BuzziNest Room

INSTALLATION MANUAL

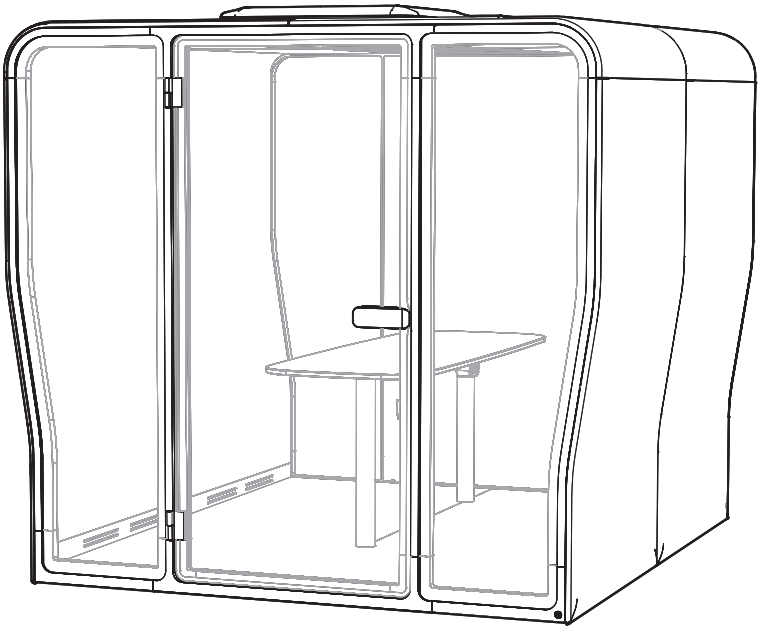

## BuzziNest Room

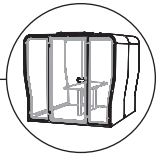

2 PERS.

## Excluded

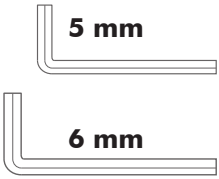


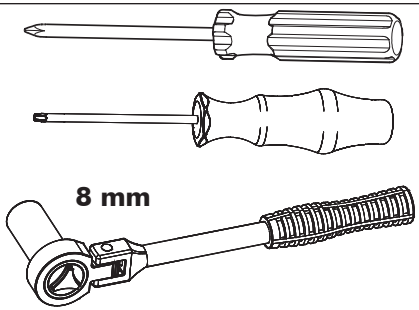


## Included

Red

26x

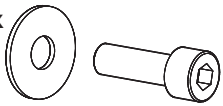

M8 x 30 mm



Yellow

35x

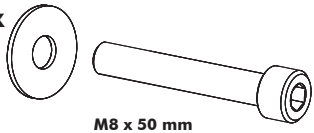

M8 x 50 mm

White

28x

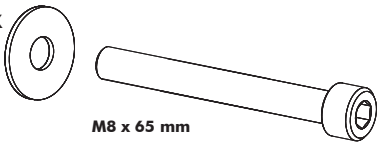

M8 x 65 mm

Grey

17x

M10 x 25 mm

Turquoise

8x

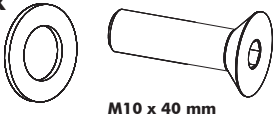

M10 x 40 mm

Black

4x

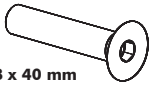

M8 x 40 mm

Blue

1x

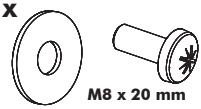

M8 x 20 mm

Orange

16x

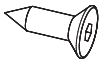

4 x 16 mm

Pink

8x

4,8 x 19 mm

Purple

40x

4 x 45 mm

18x

4 x 25 mm

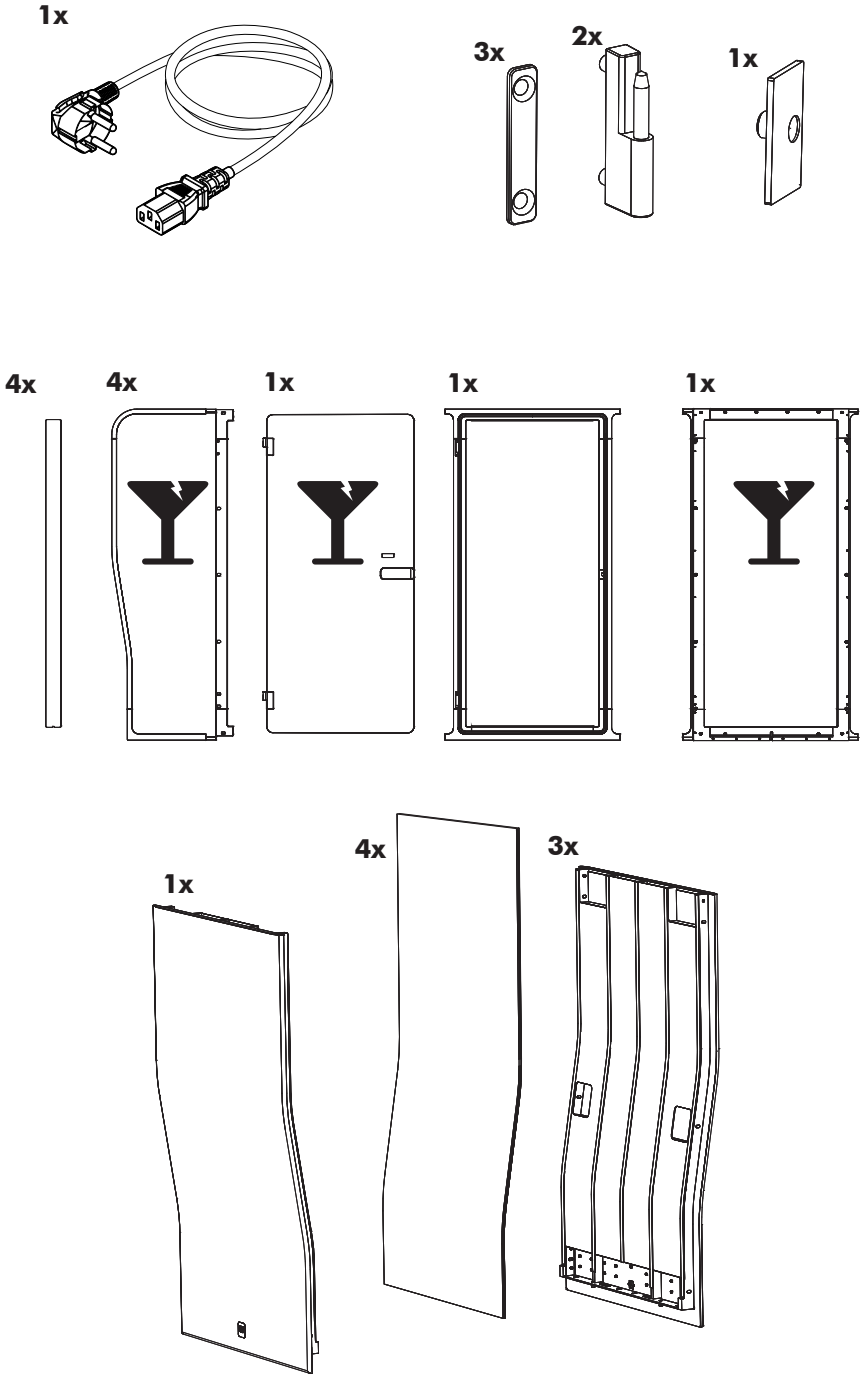
1x
3x
2x
1x
4x
4x
1x
1x
1x
1x
4x
3x

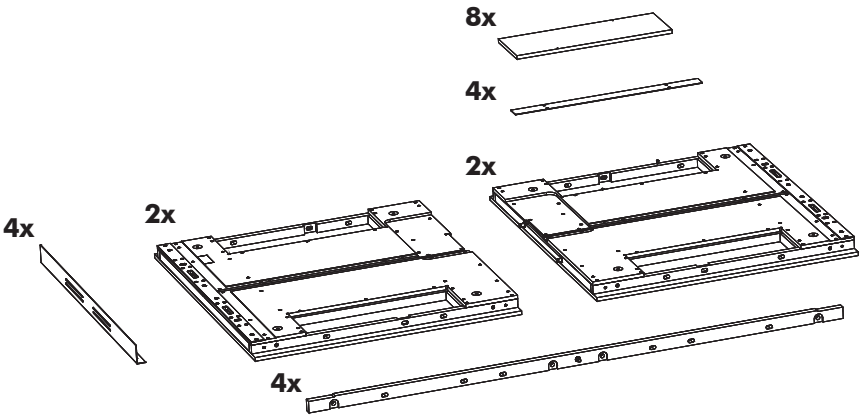
8x
4x
2x
2x
4x
4x

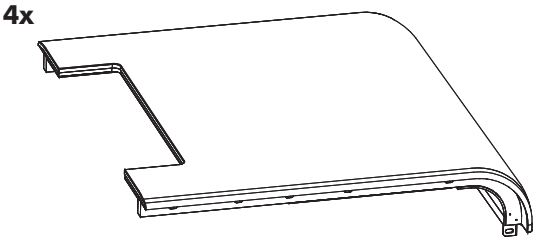
4x

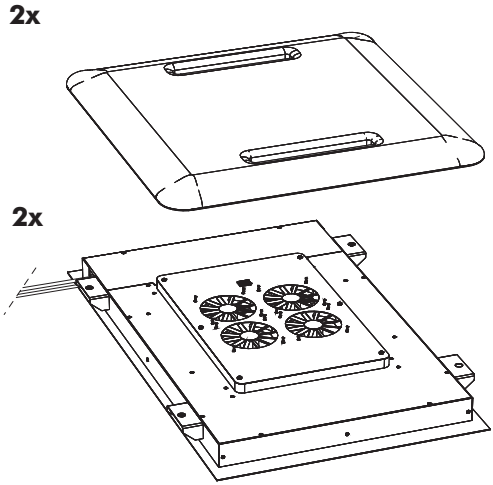
2x
2x

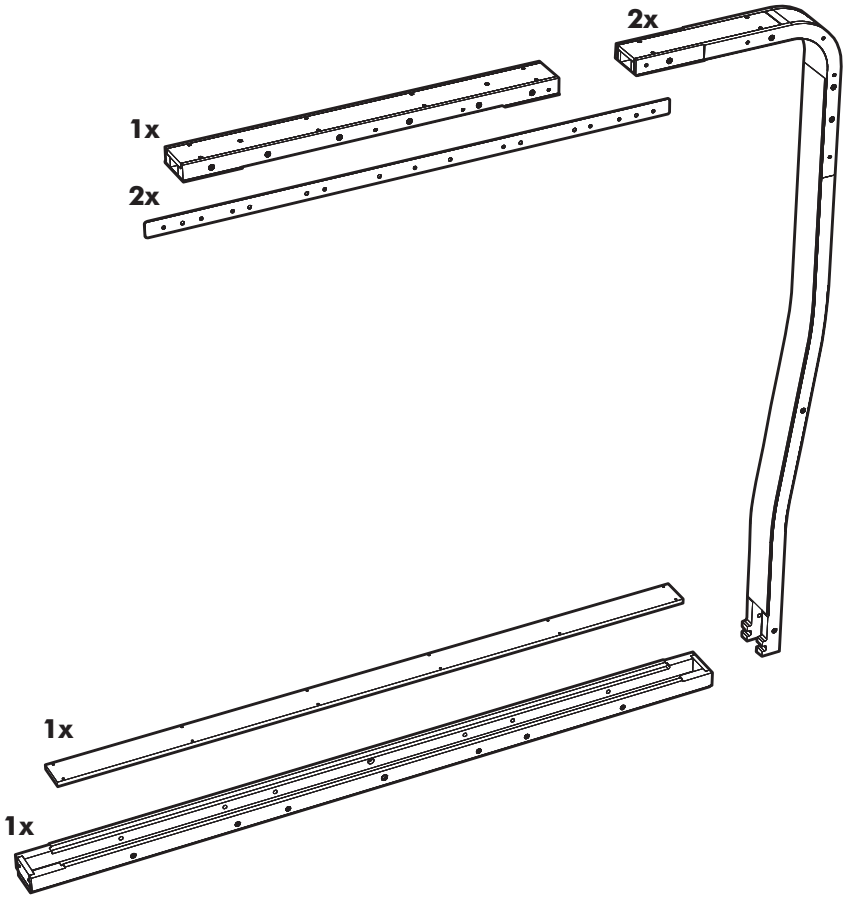


## No Table

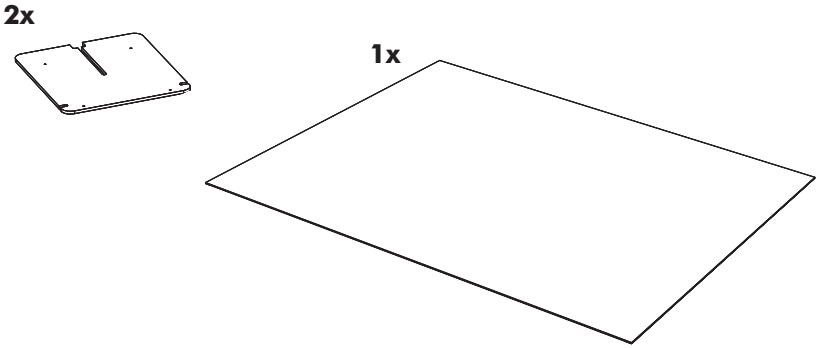

# Optional Table and electrification

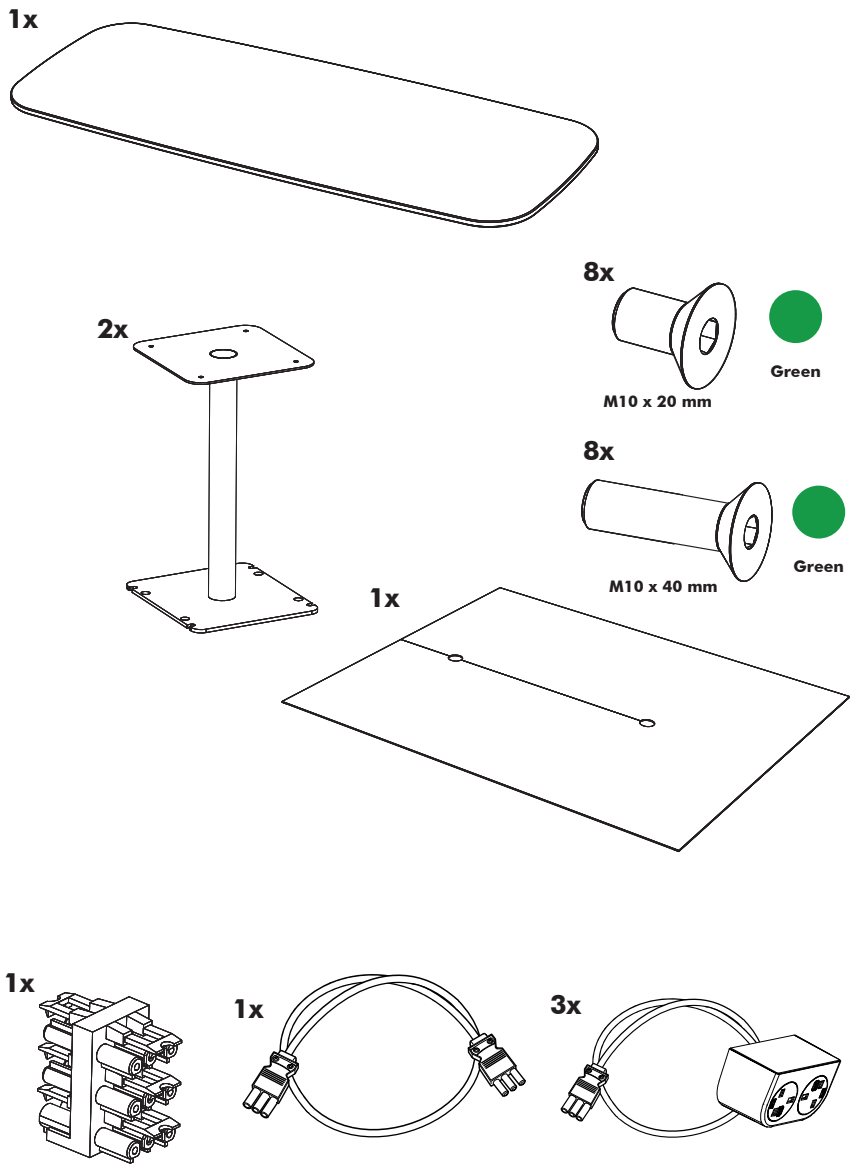

1

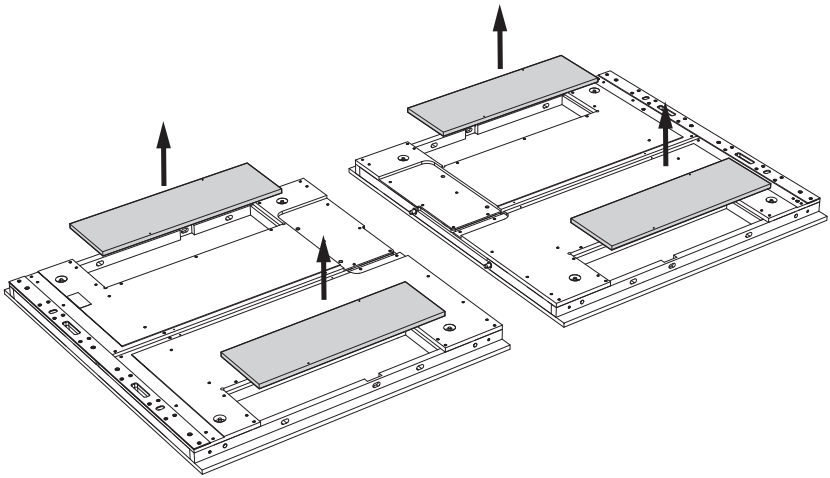

2

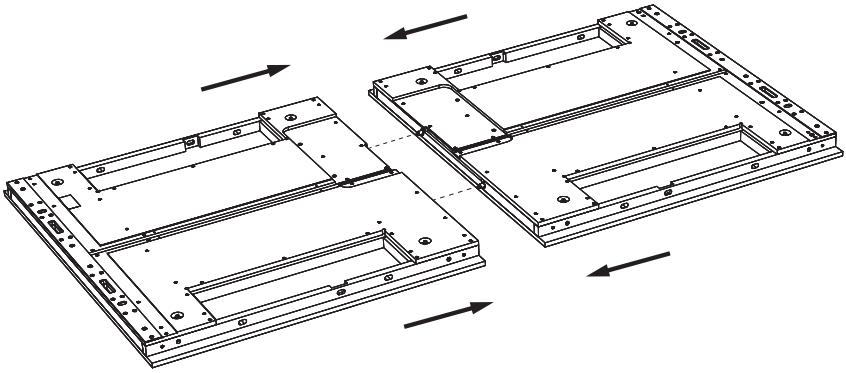

# 3

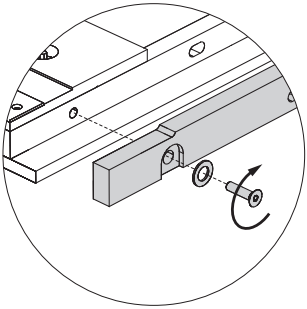

2x

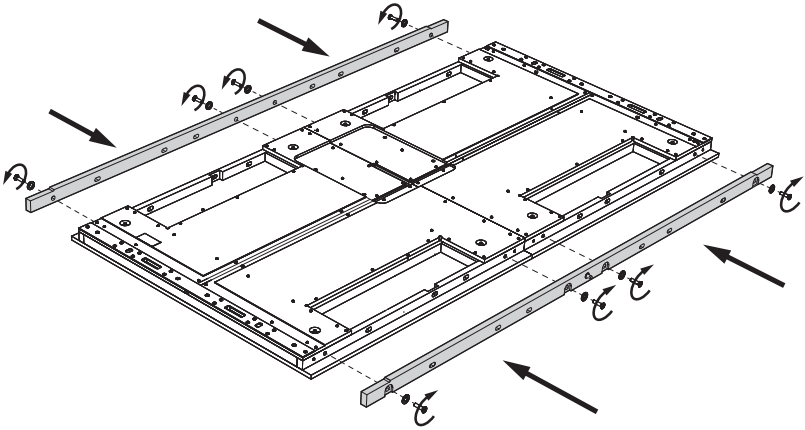

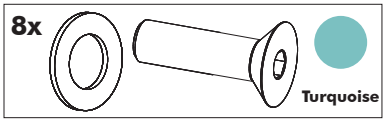

# 4

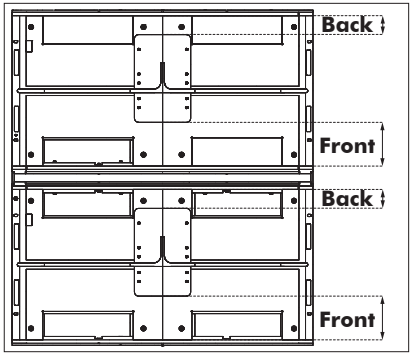


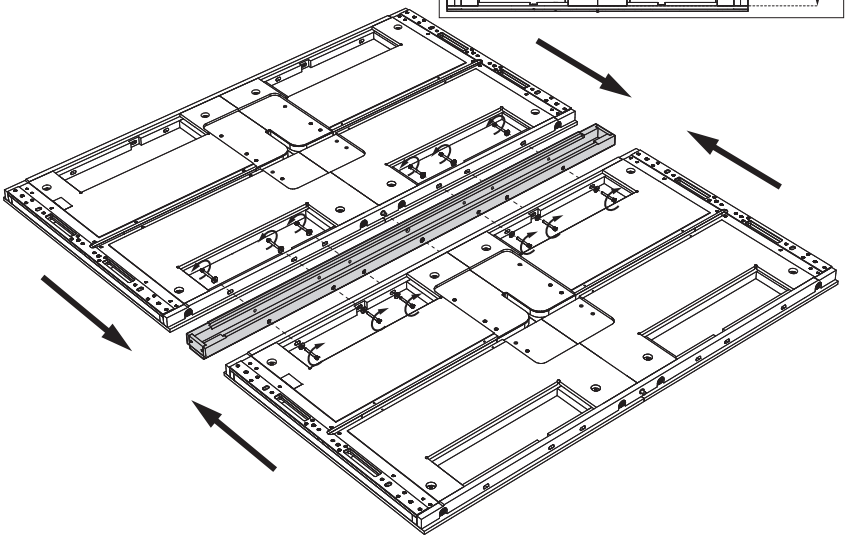

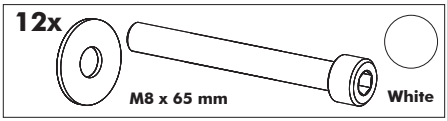


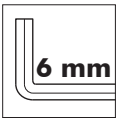


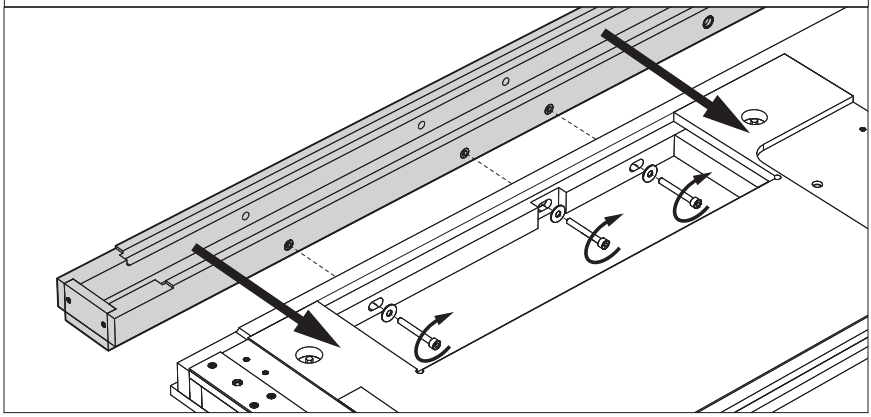

## 5

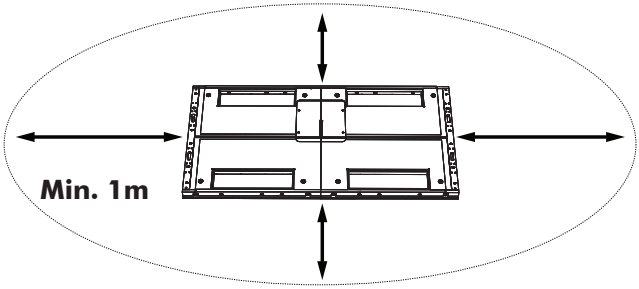


## 6

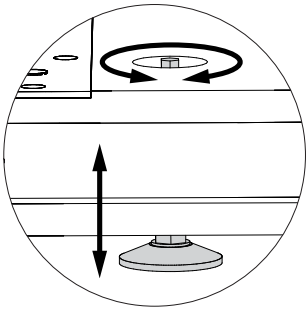

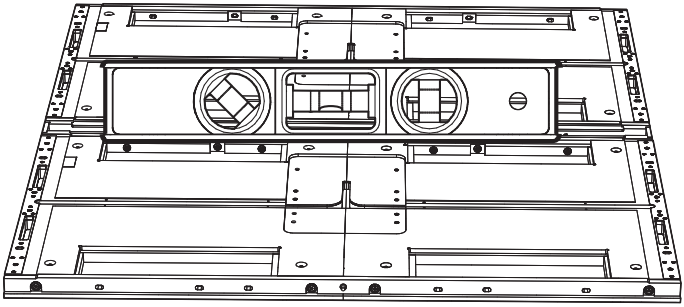

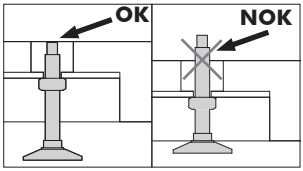

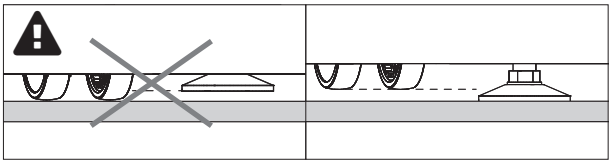

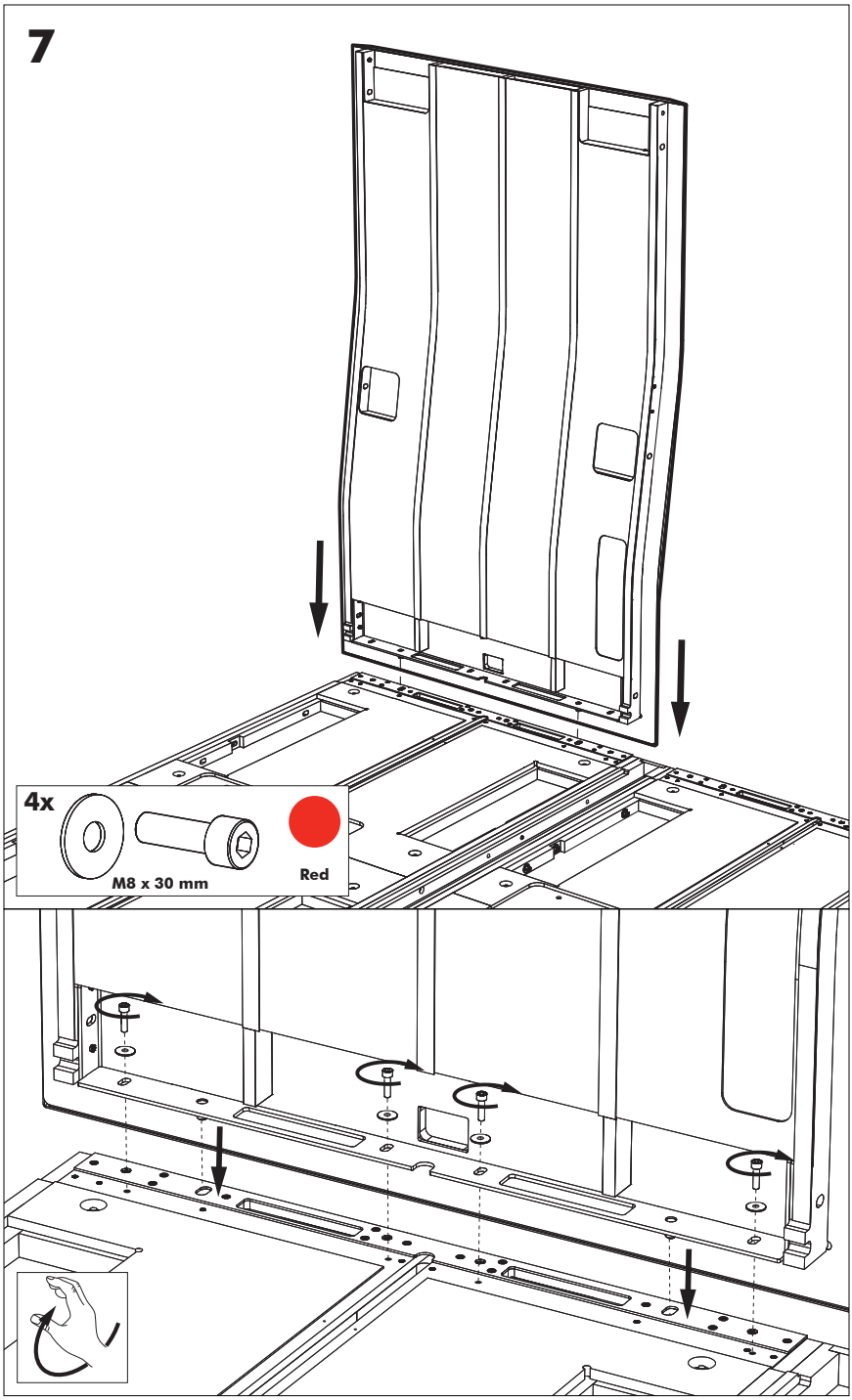
7
4x
M8 x 30 mm
Red

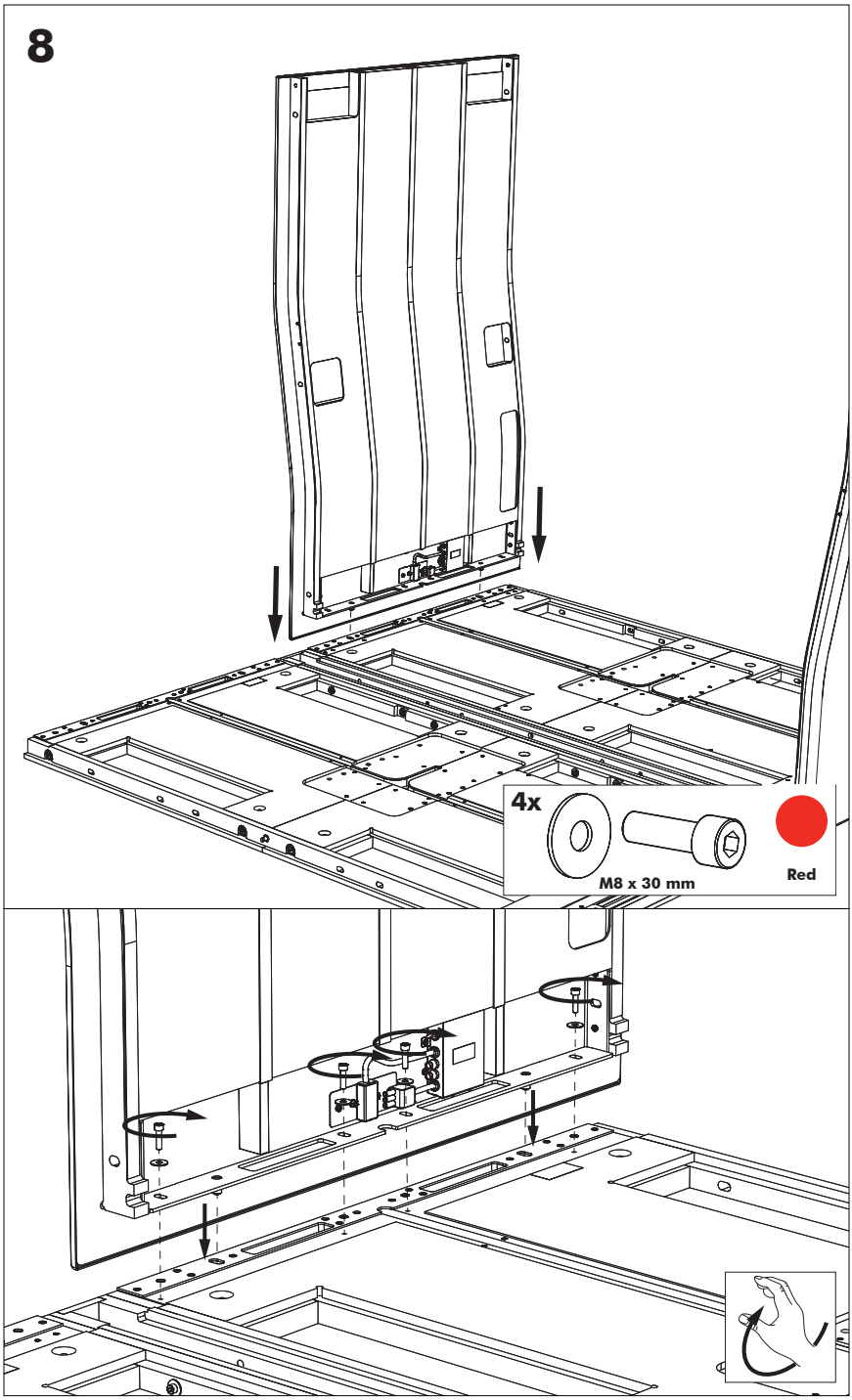
8
4x
M8 x 30 mm
Red

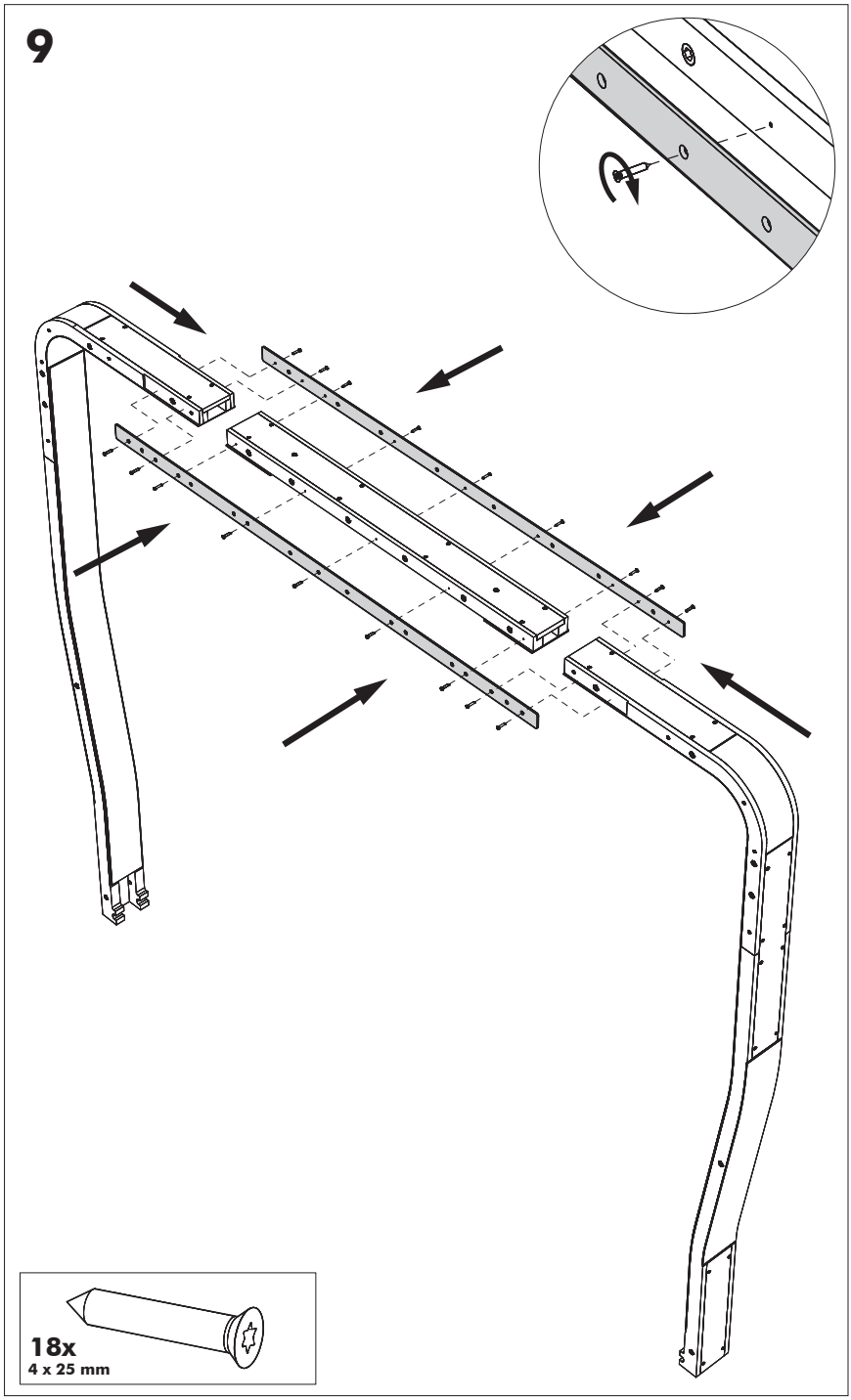
9
18x
4 x 25 mm

# 10

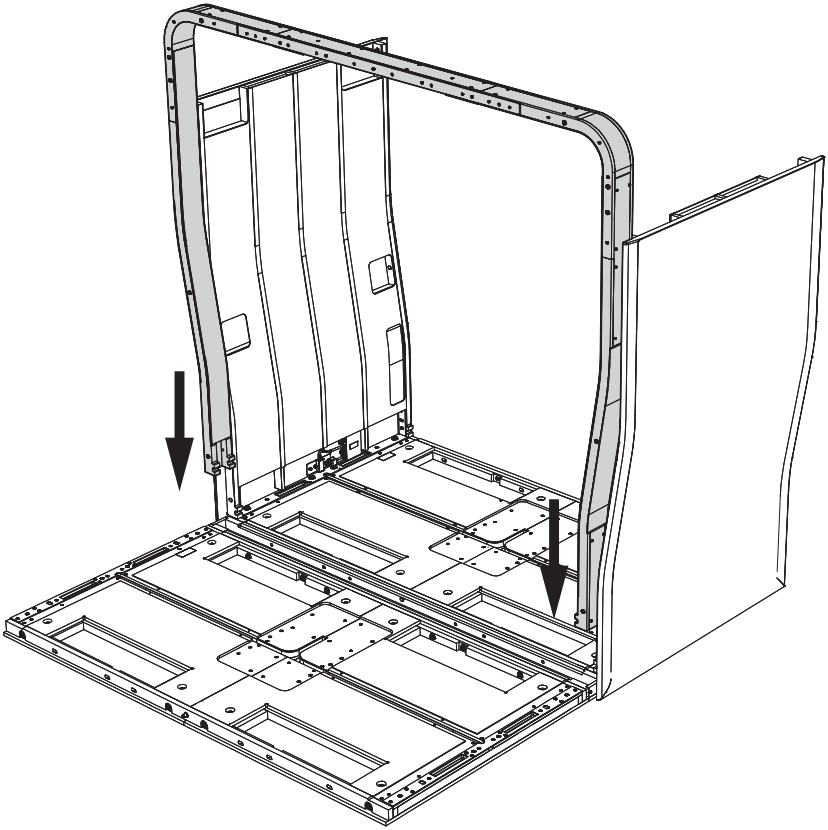

# 11

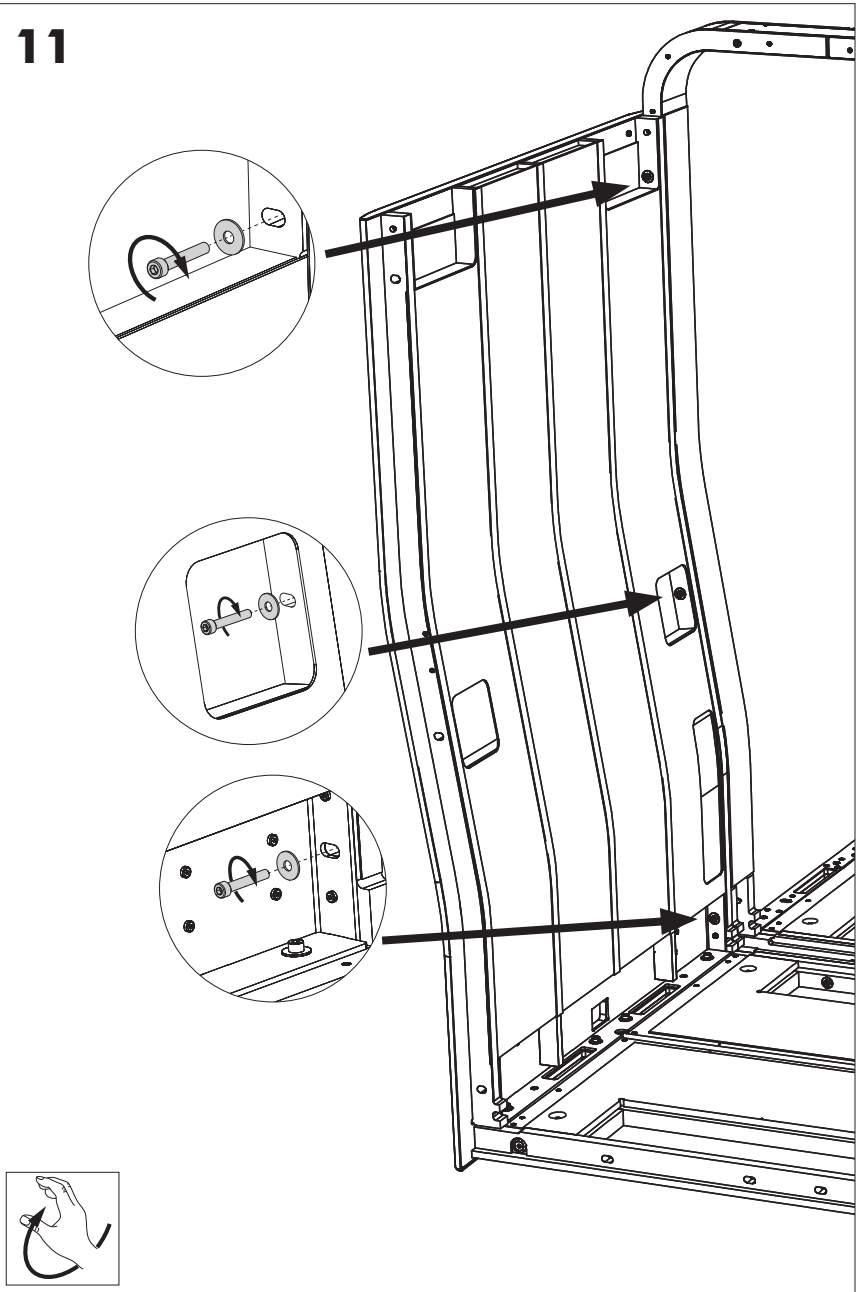



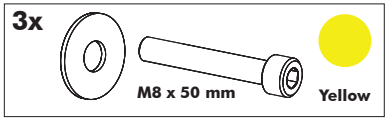

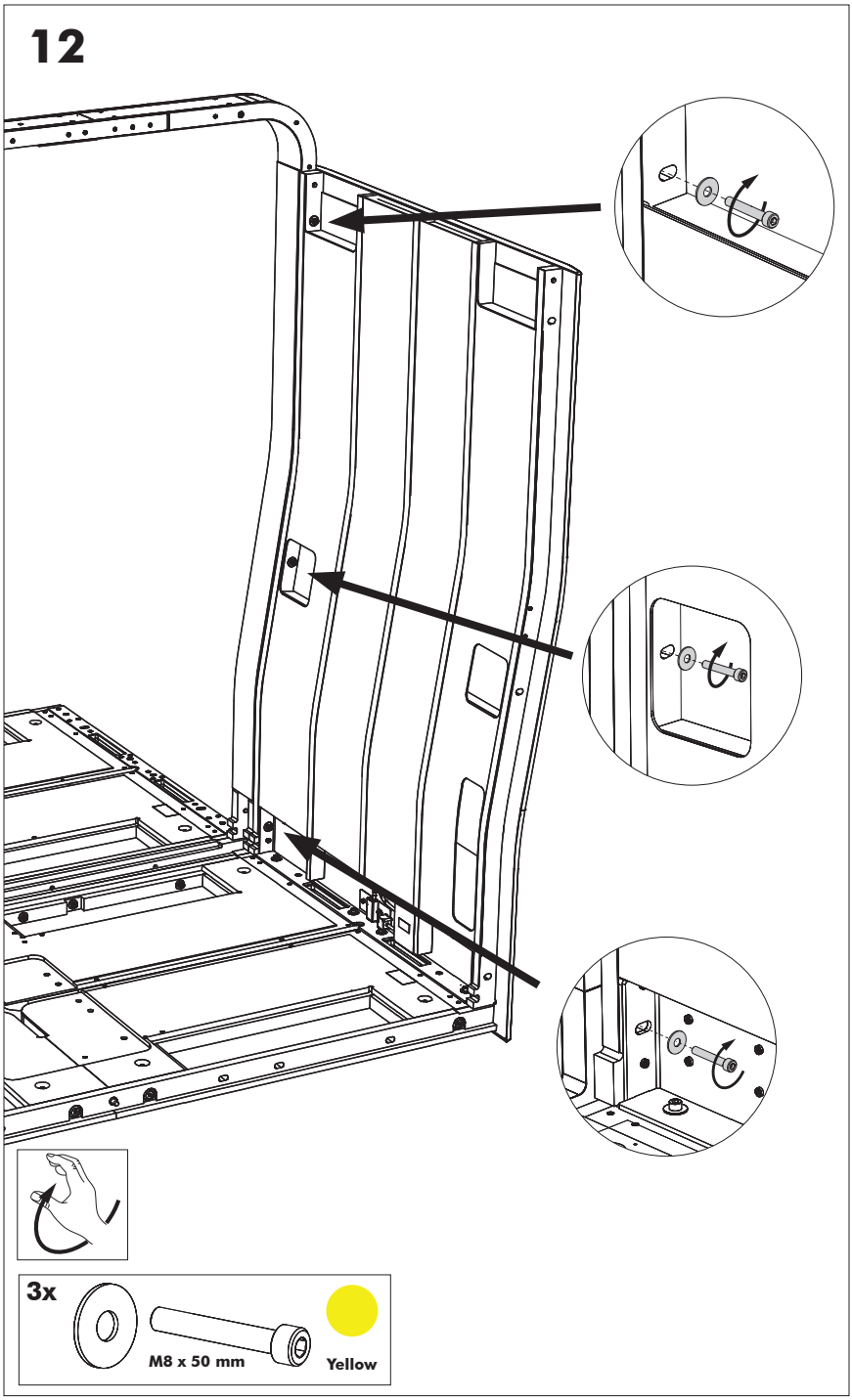
12
3x
M8 x 50 mm
Yellow

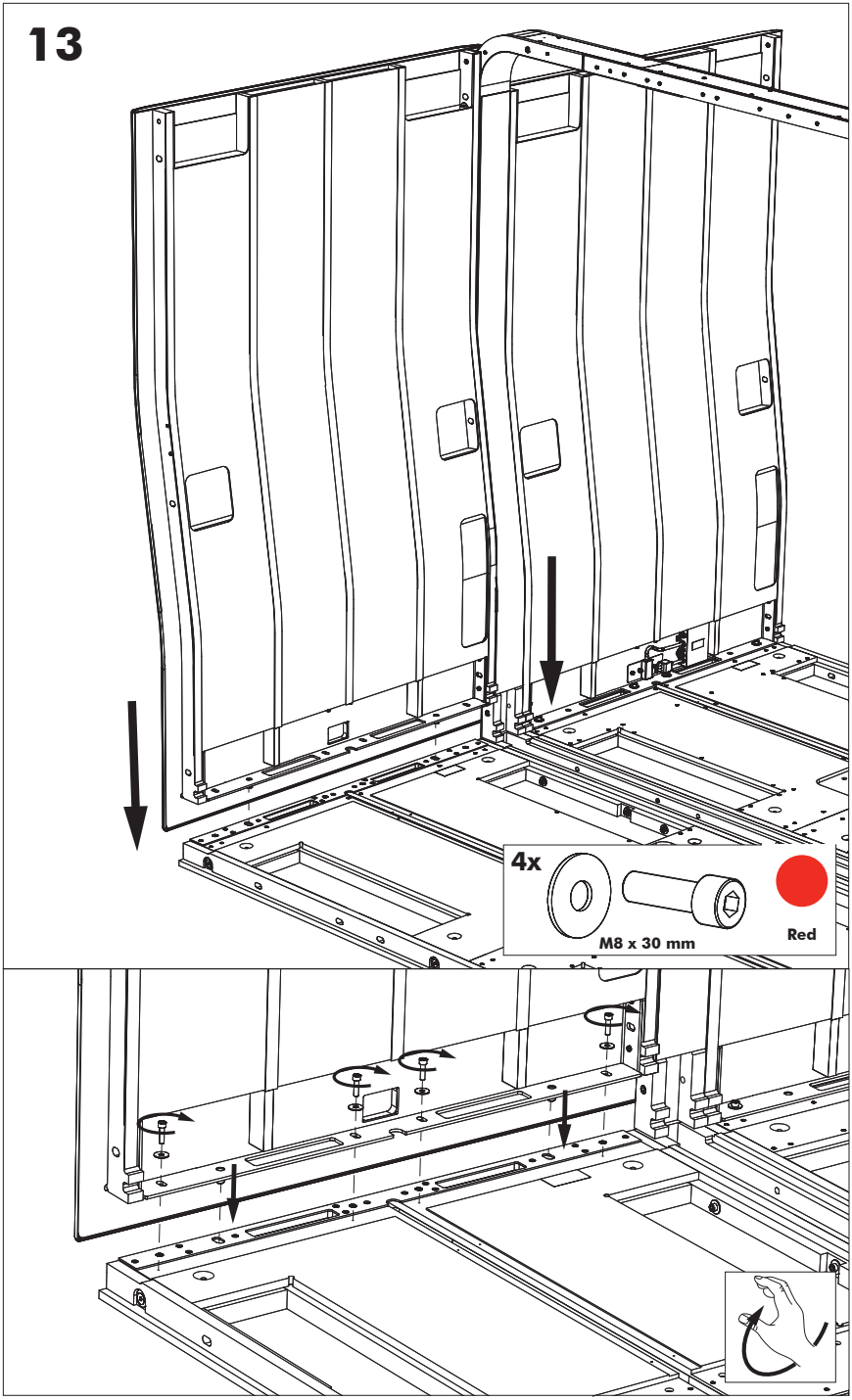
13
4x
M8 x 30 mm
Red

# 14

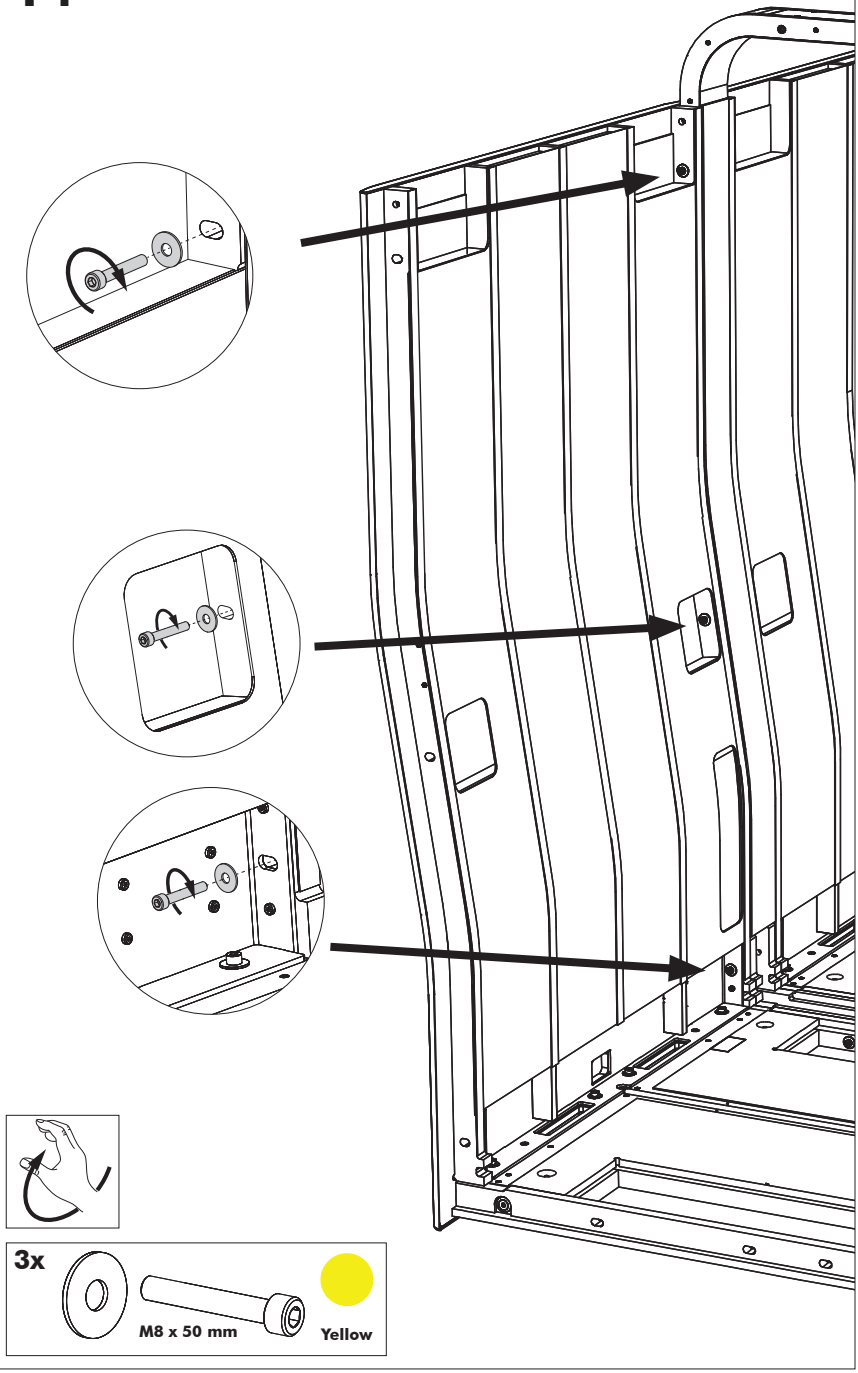

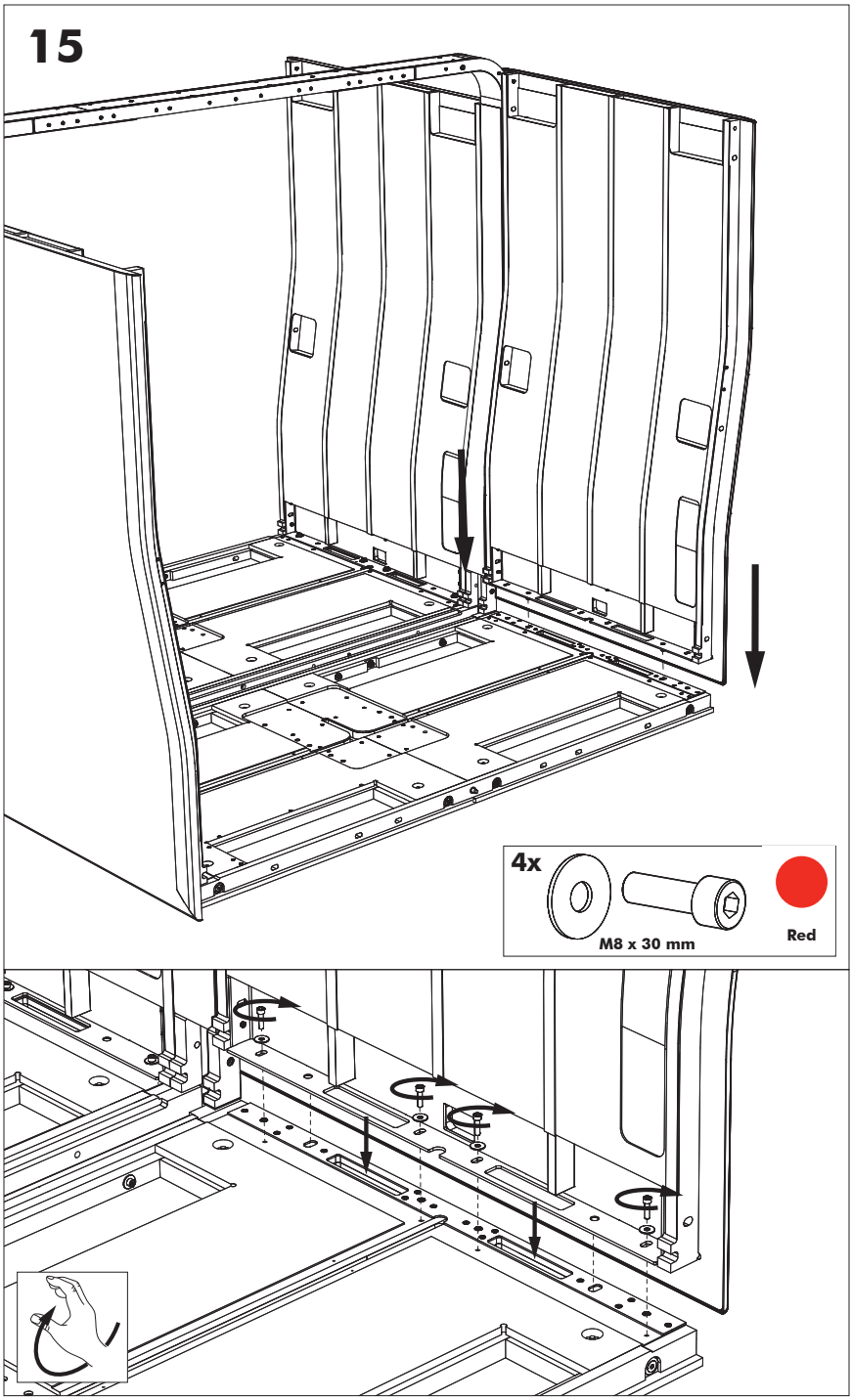
15
4x
M8 x 30 mm
Red

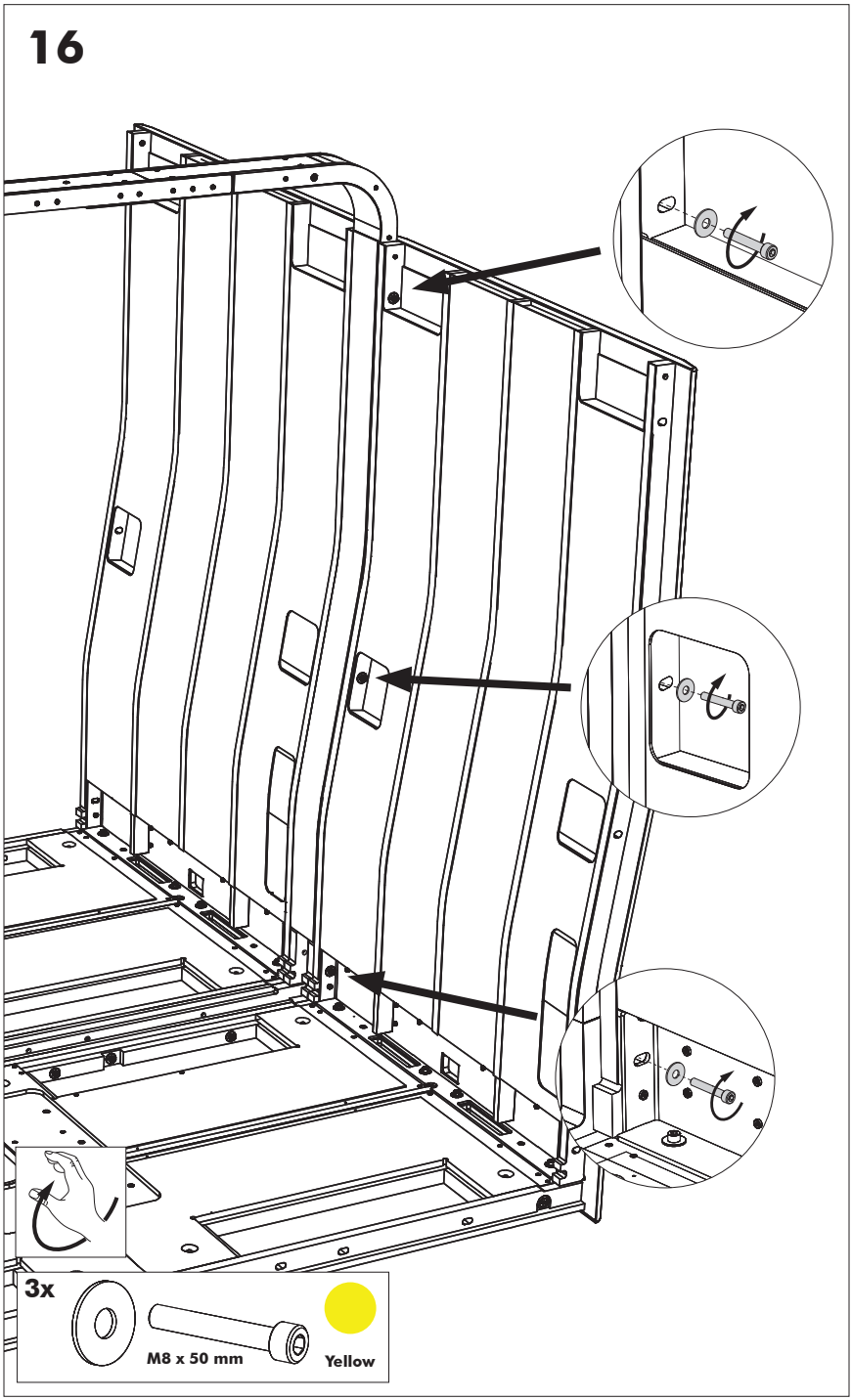
16
3x
M8 x 50 mm
Yellow

# 17

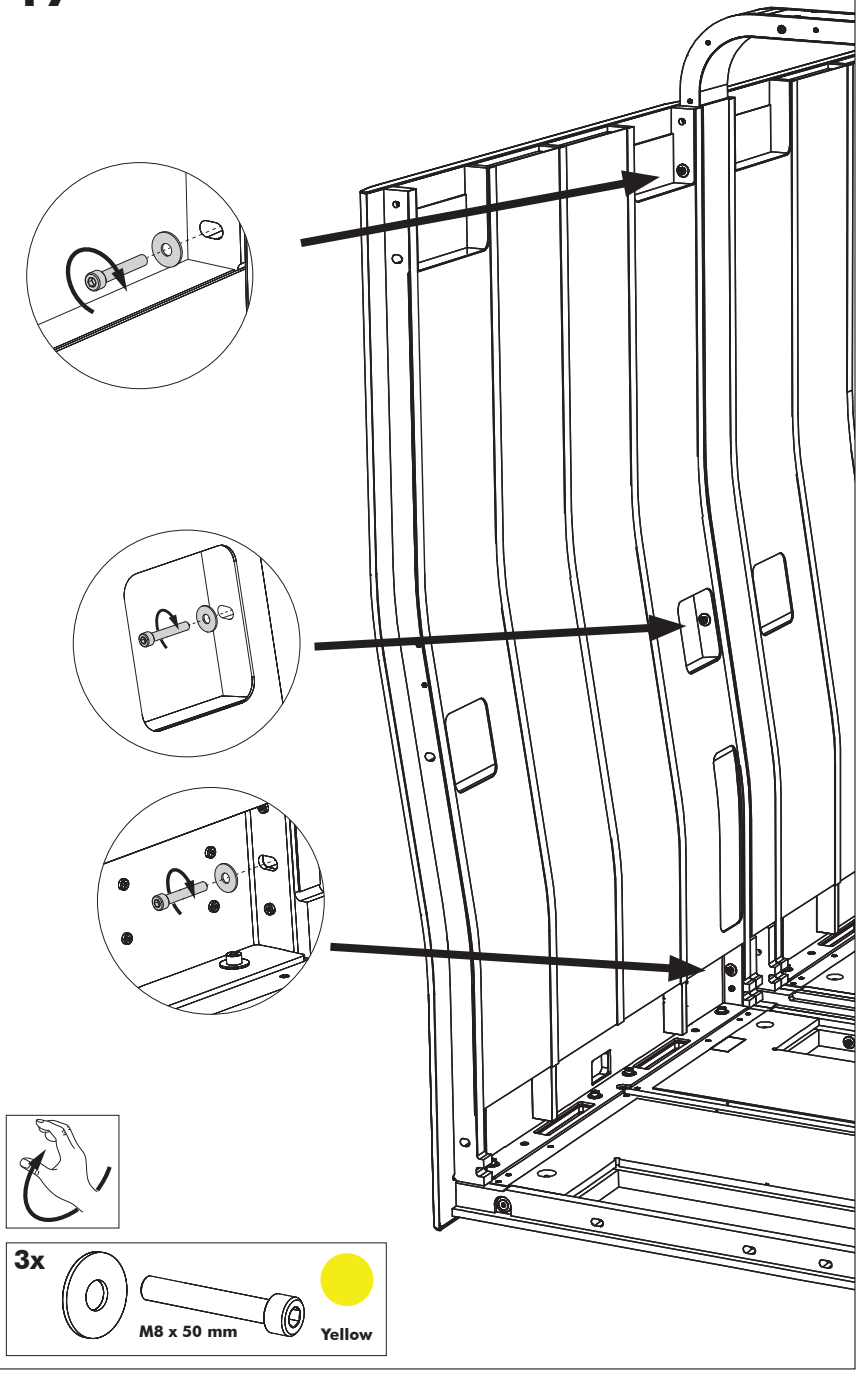

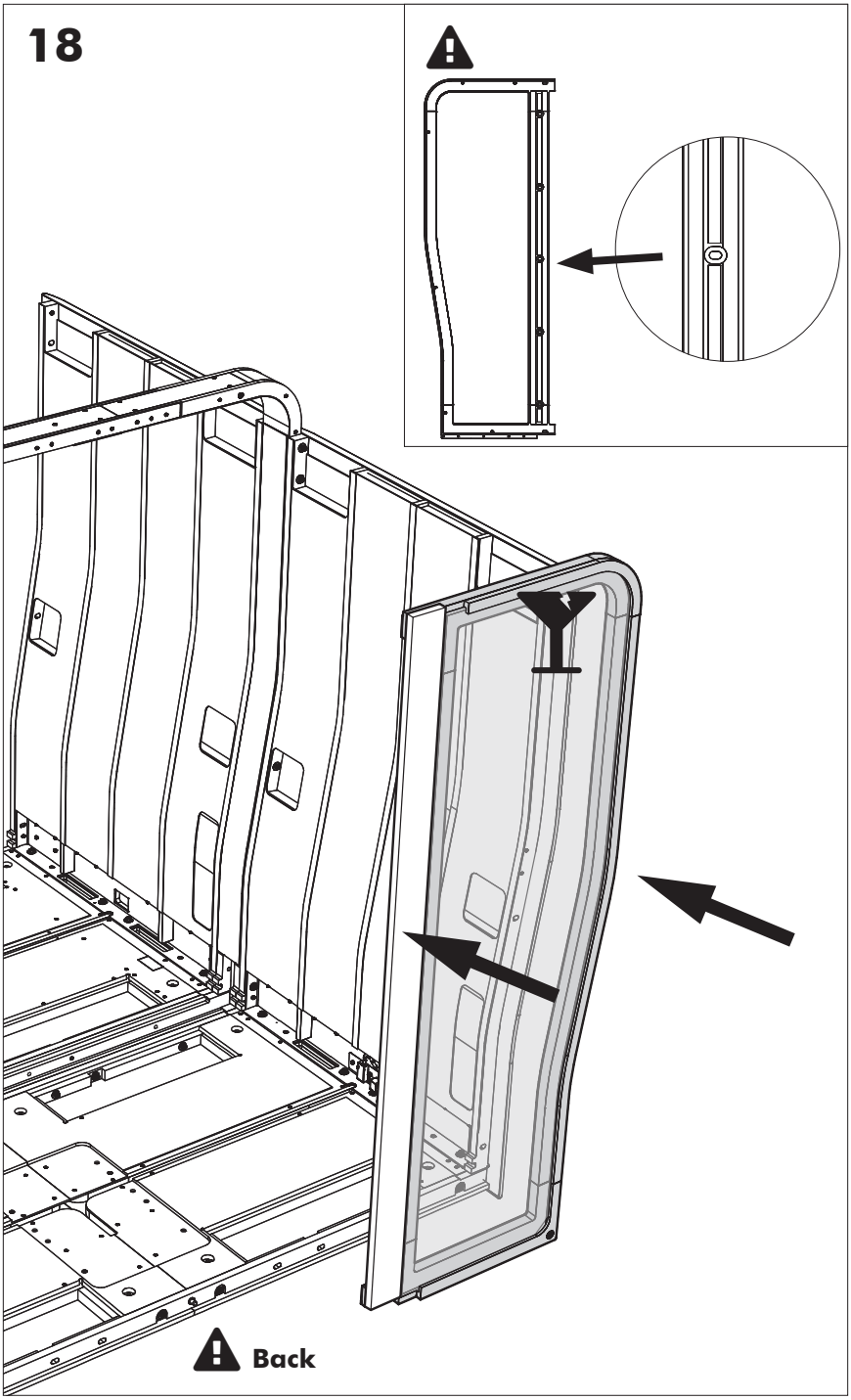
18
Back

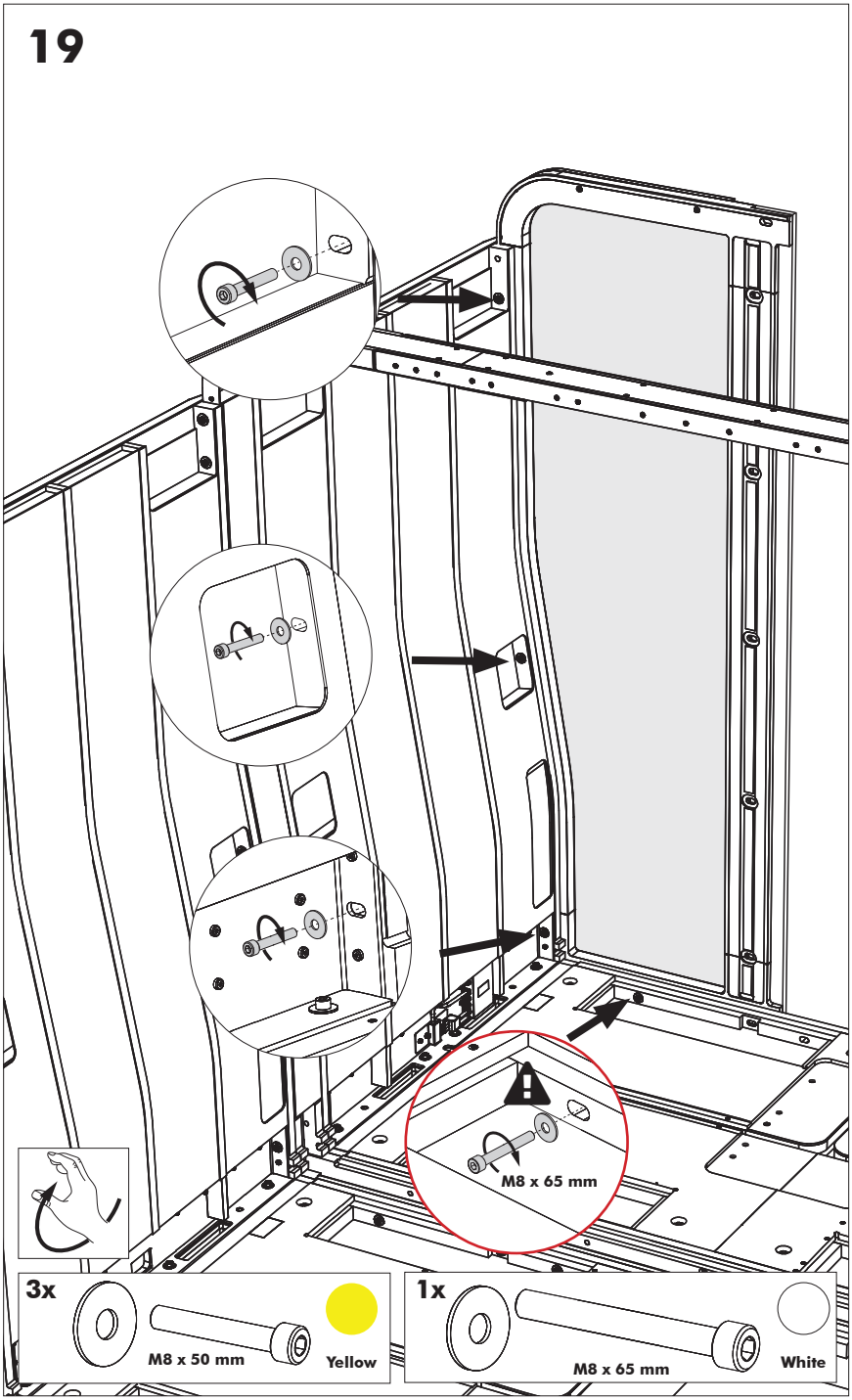
19
M8 x 65 mm
3x
M8 x 50 mm
Yellow
1x
M8 x 65 mm
White

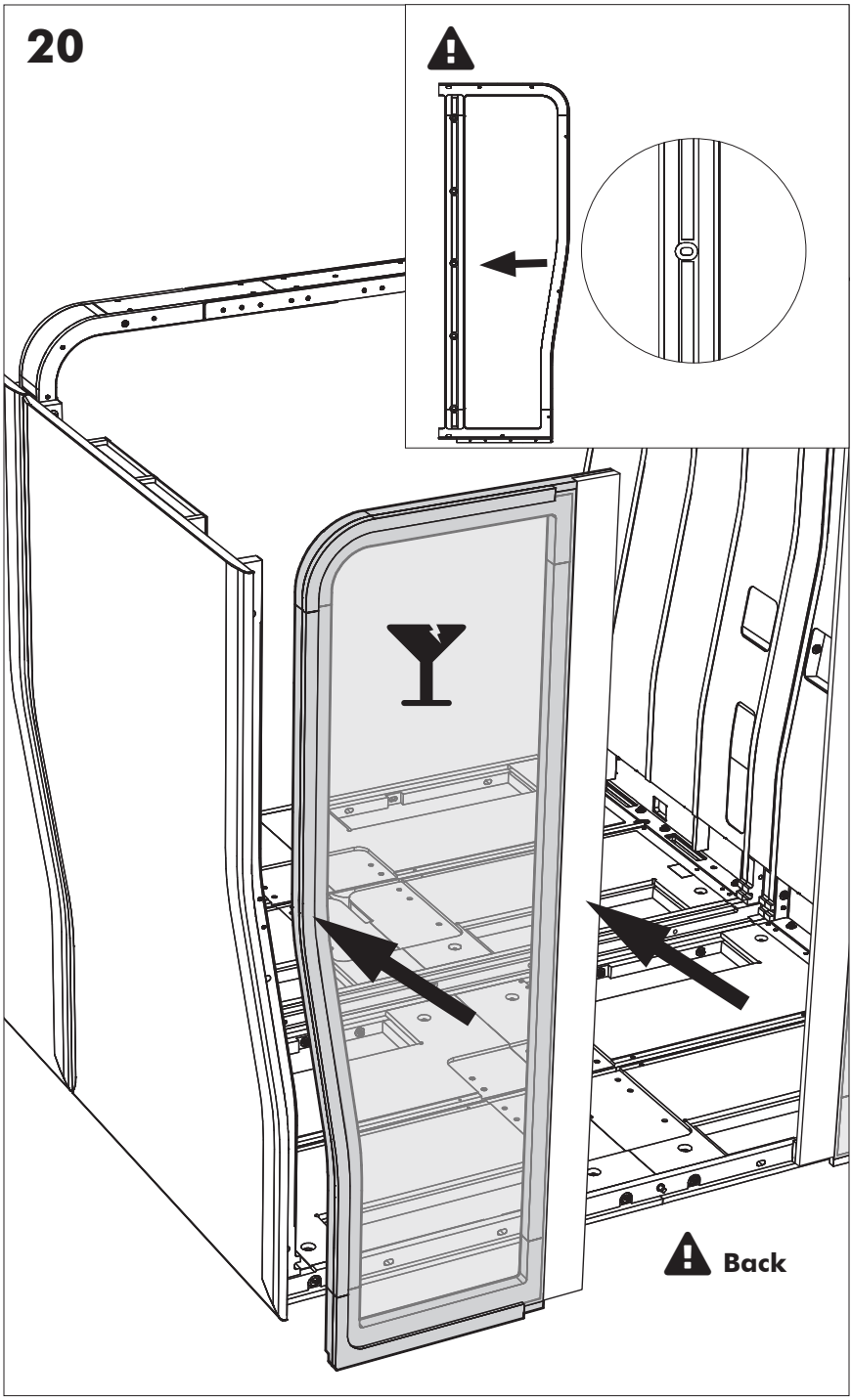
20
Back

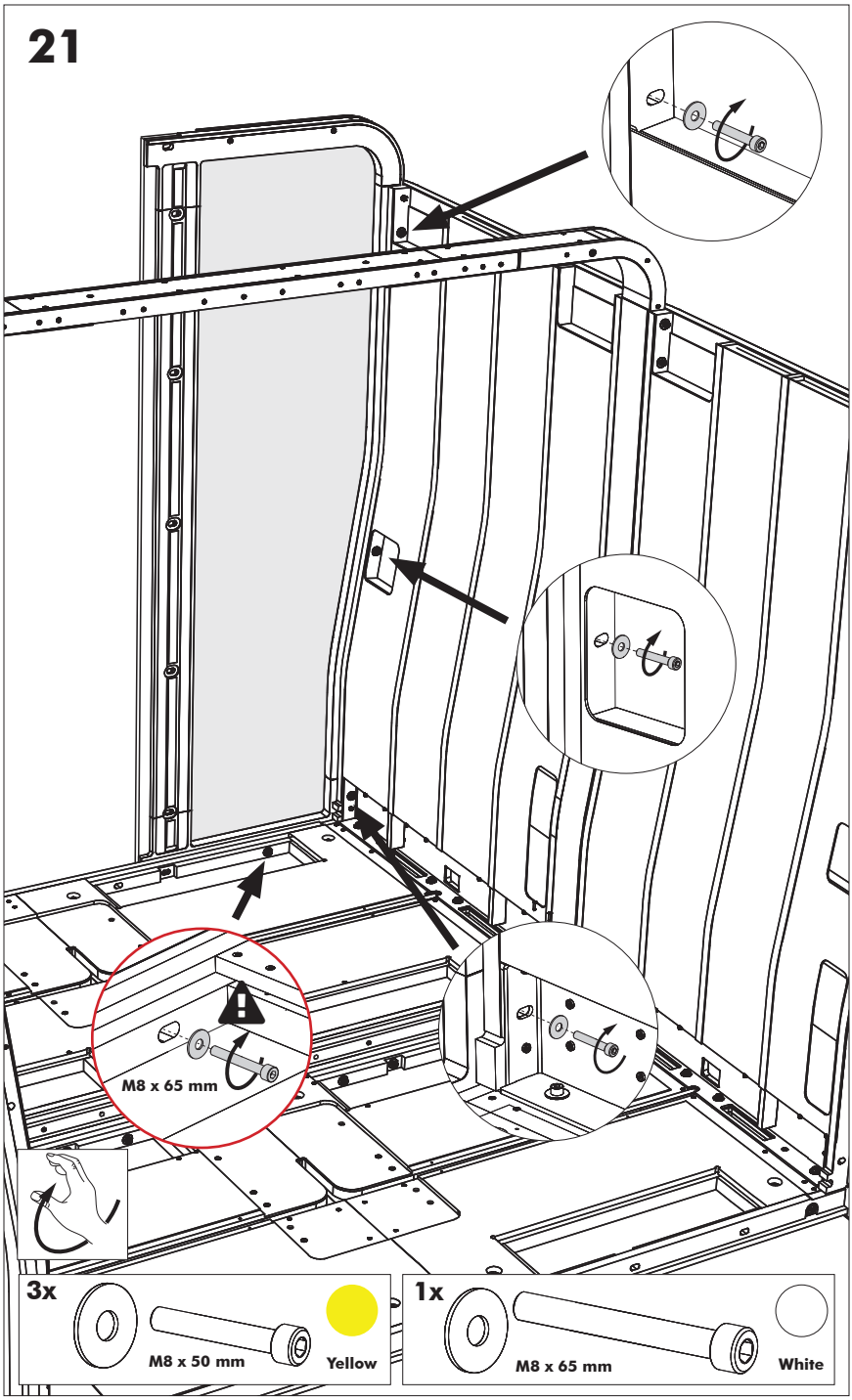
21
M8 x 65 mm
3x
M8 x 50 mm
Yellow
1x
M8 x 65 mm
White

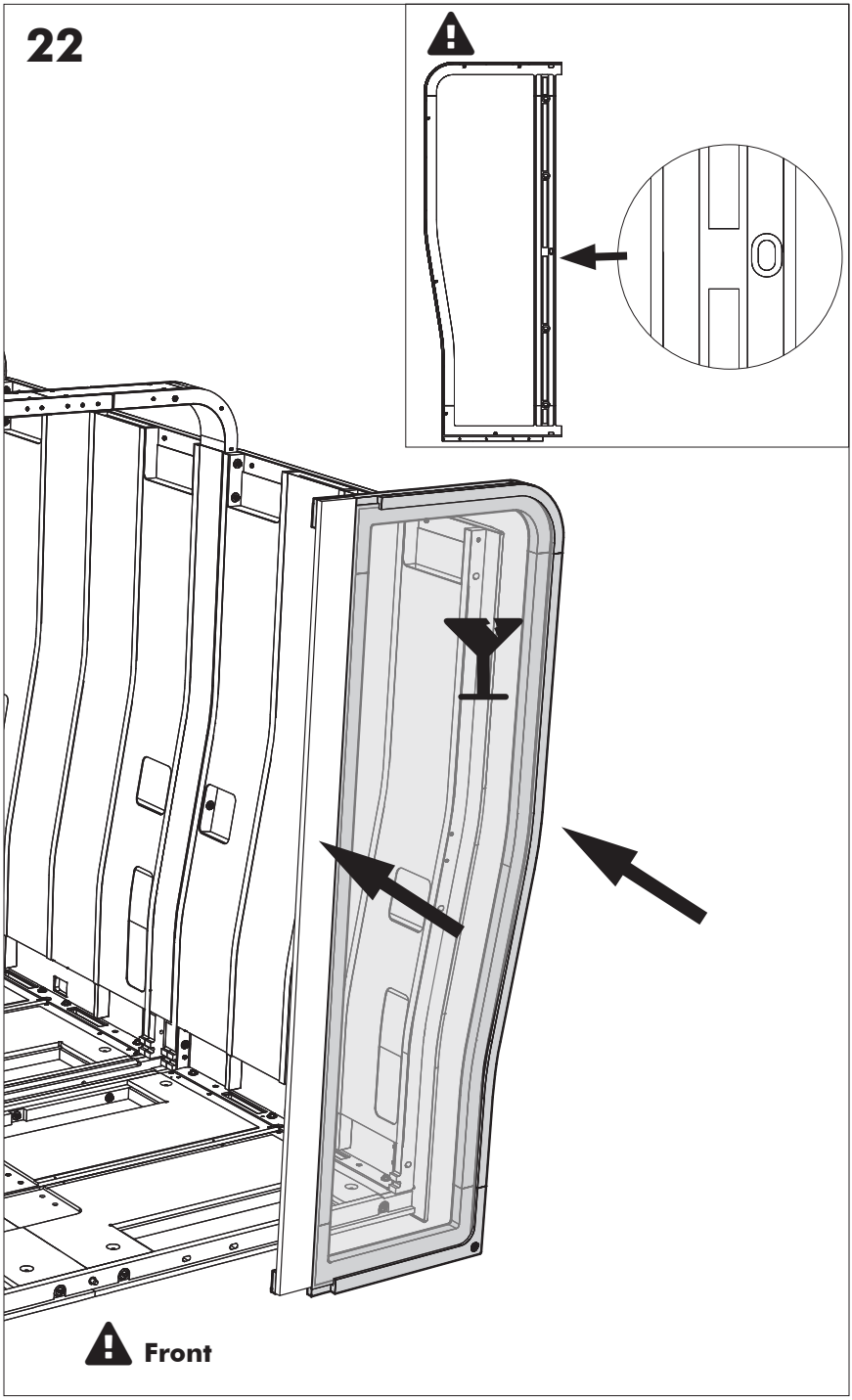
22
Front

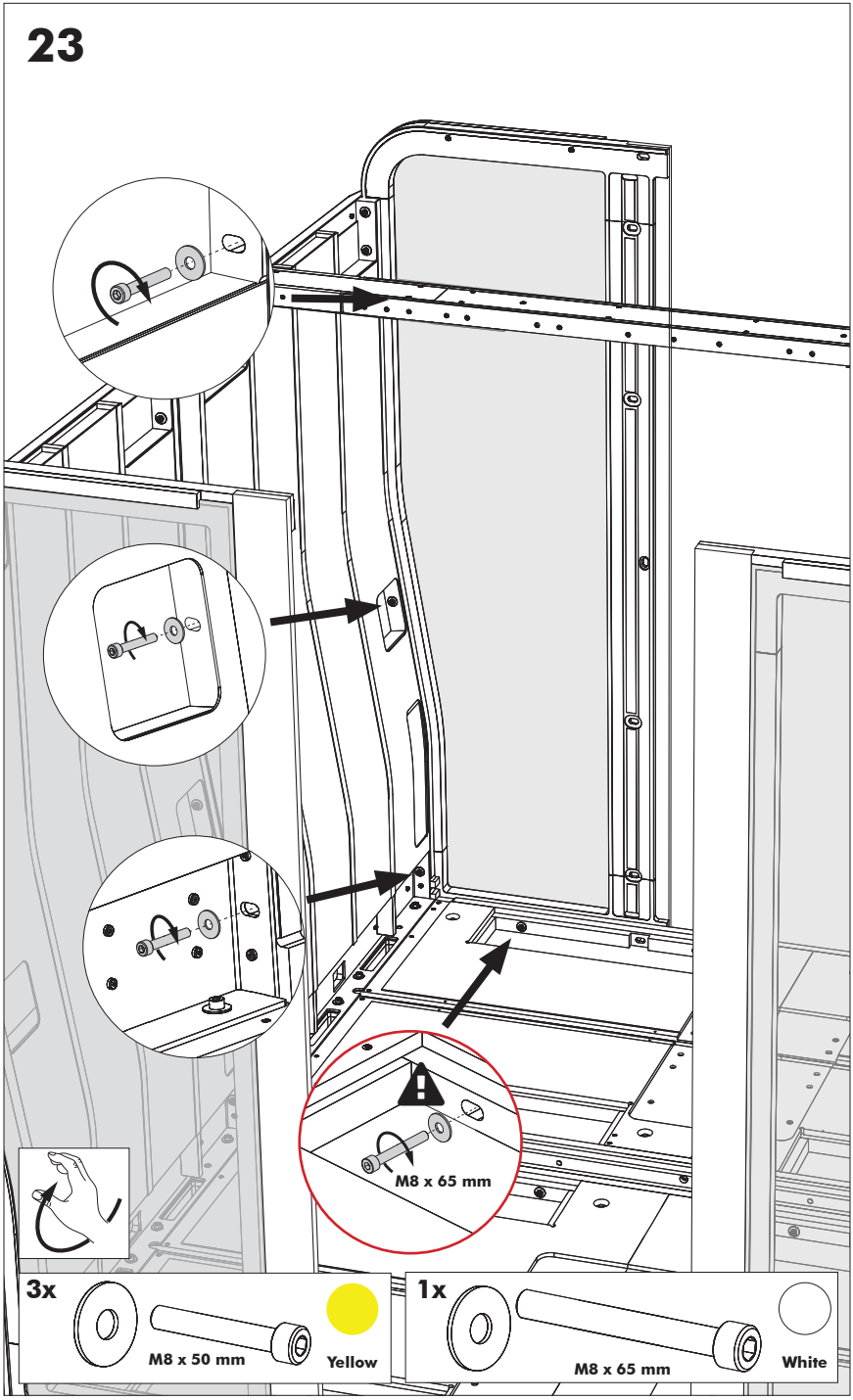
23
M8 x 65 mm
3x
M8 x 50 mm
Yellow
1x
M8 x 65 mm
White

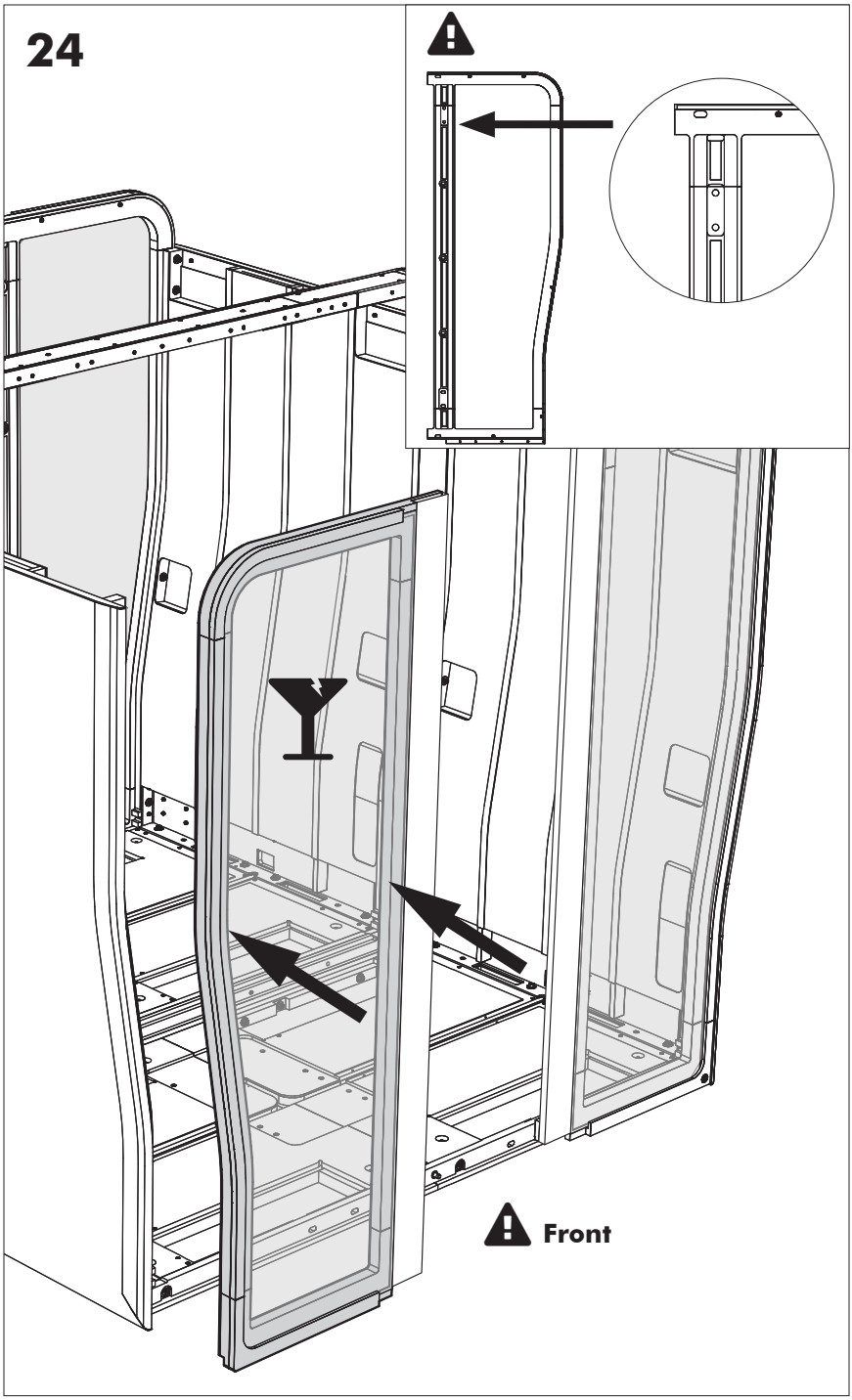
24
Front

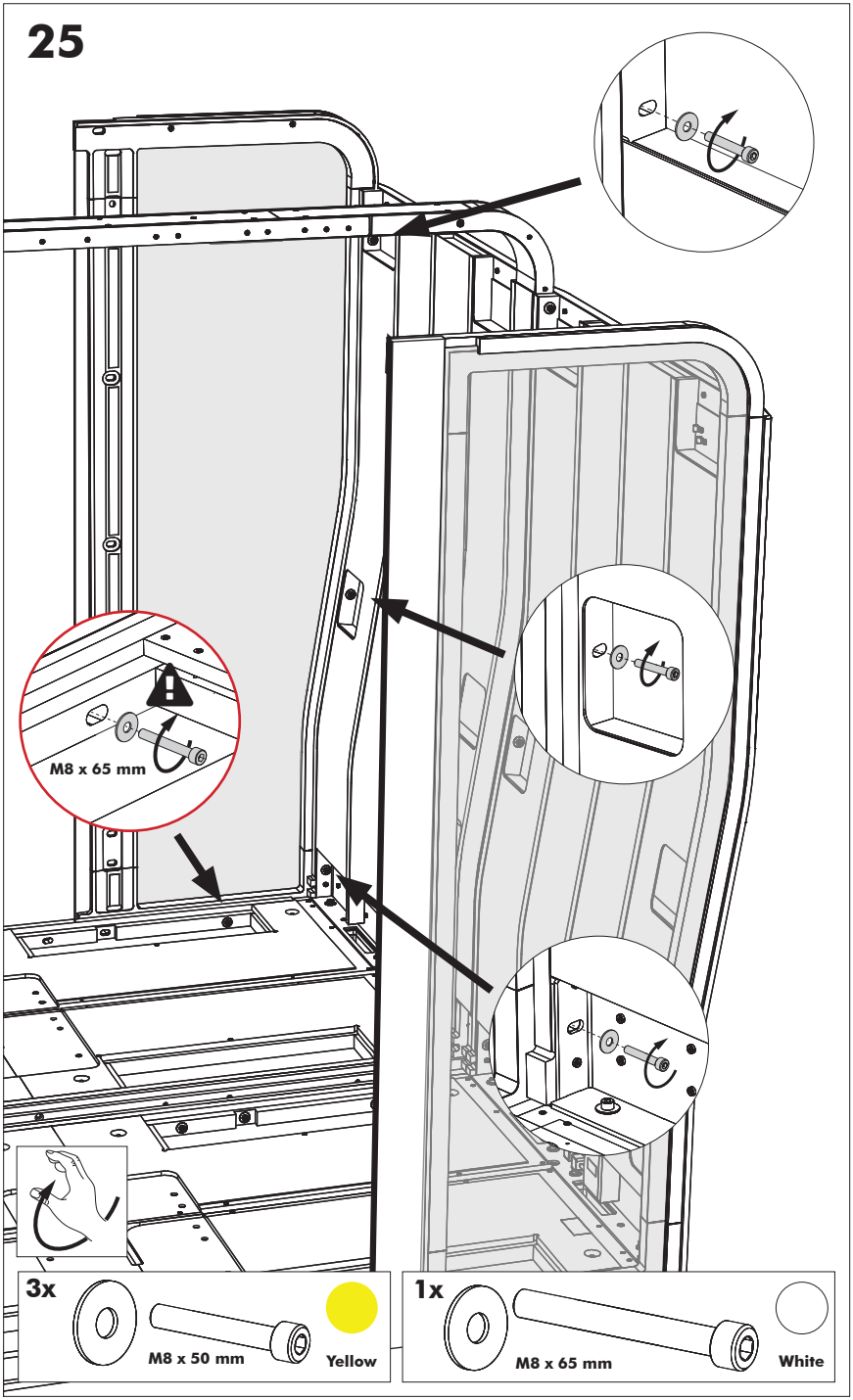
25
M8 x 65 mm
3x
M8 x 50 mm
Yellow
1x
M8 x 65 mm
White

# 26

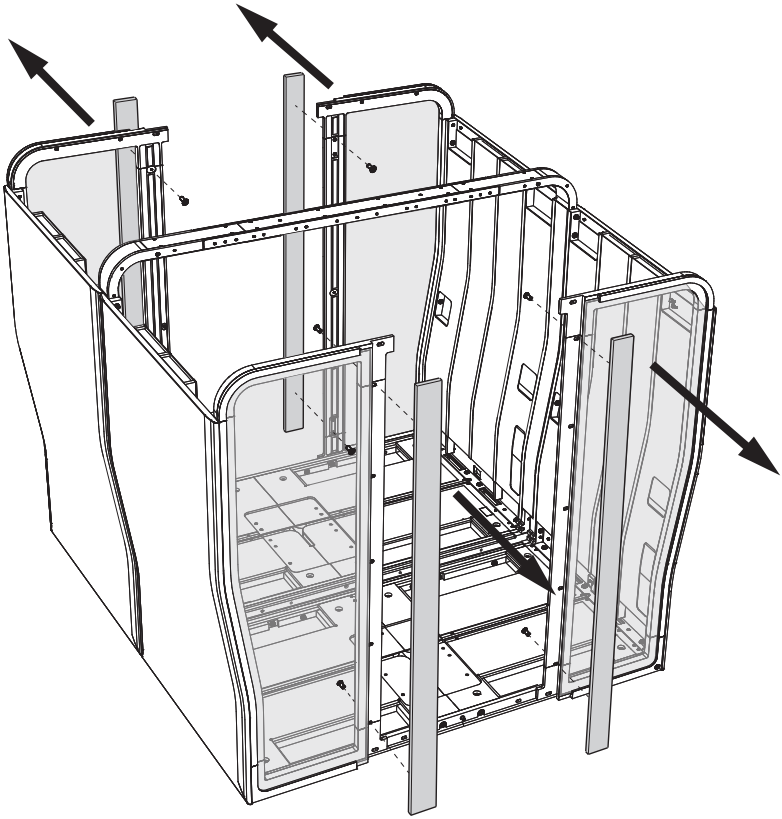

**27**

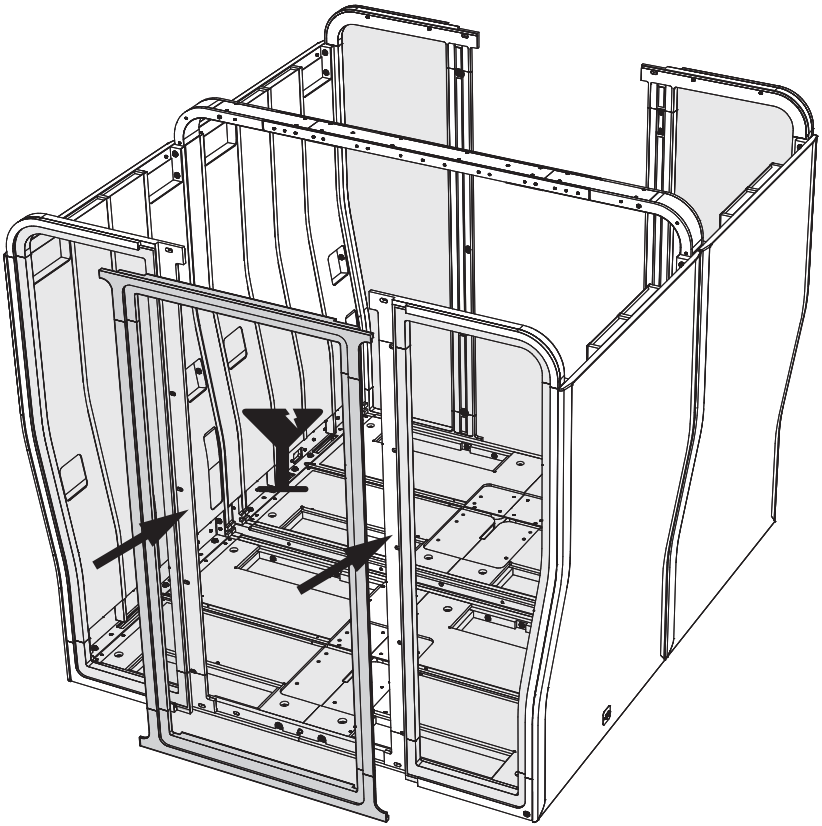

# 28

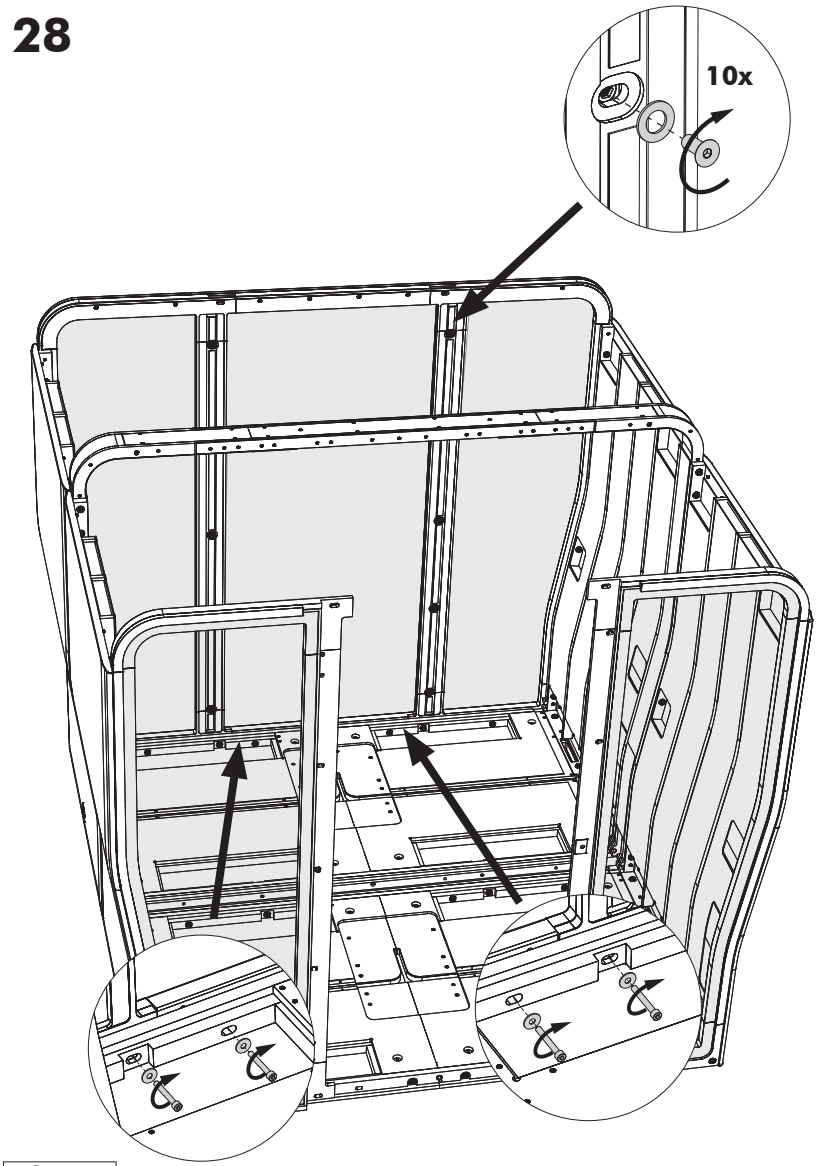

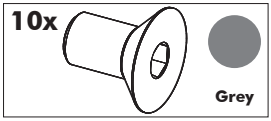


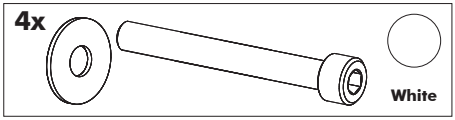

**29**

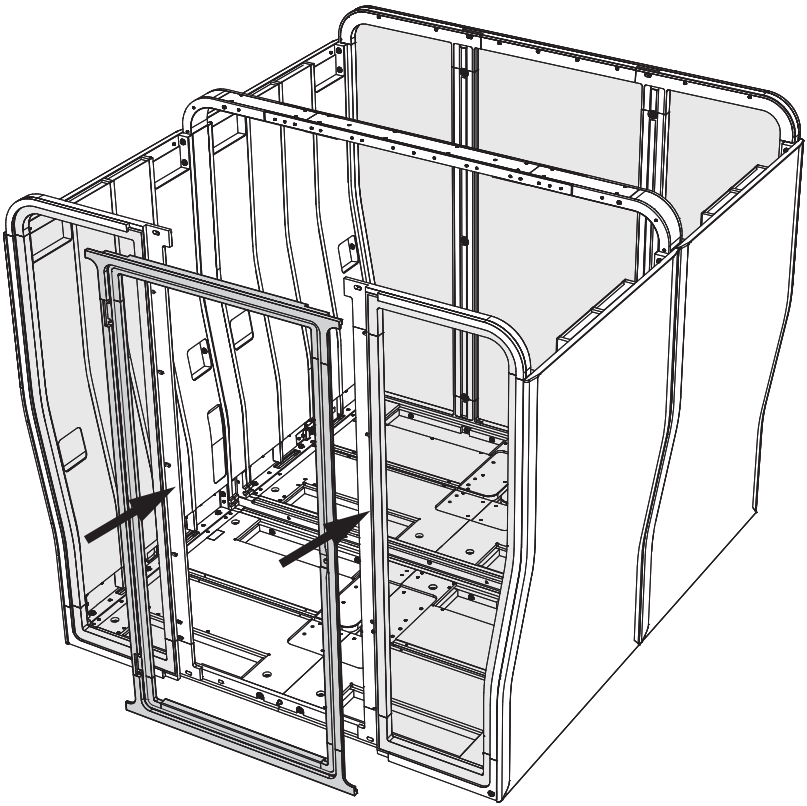

# 30

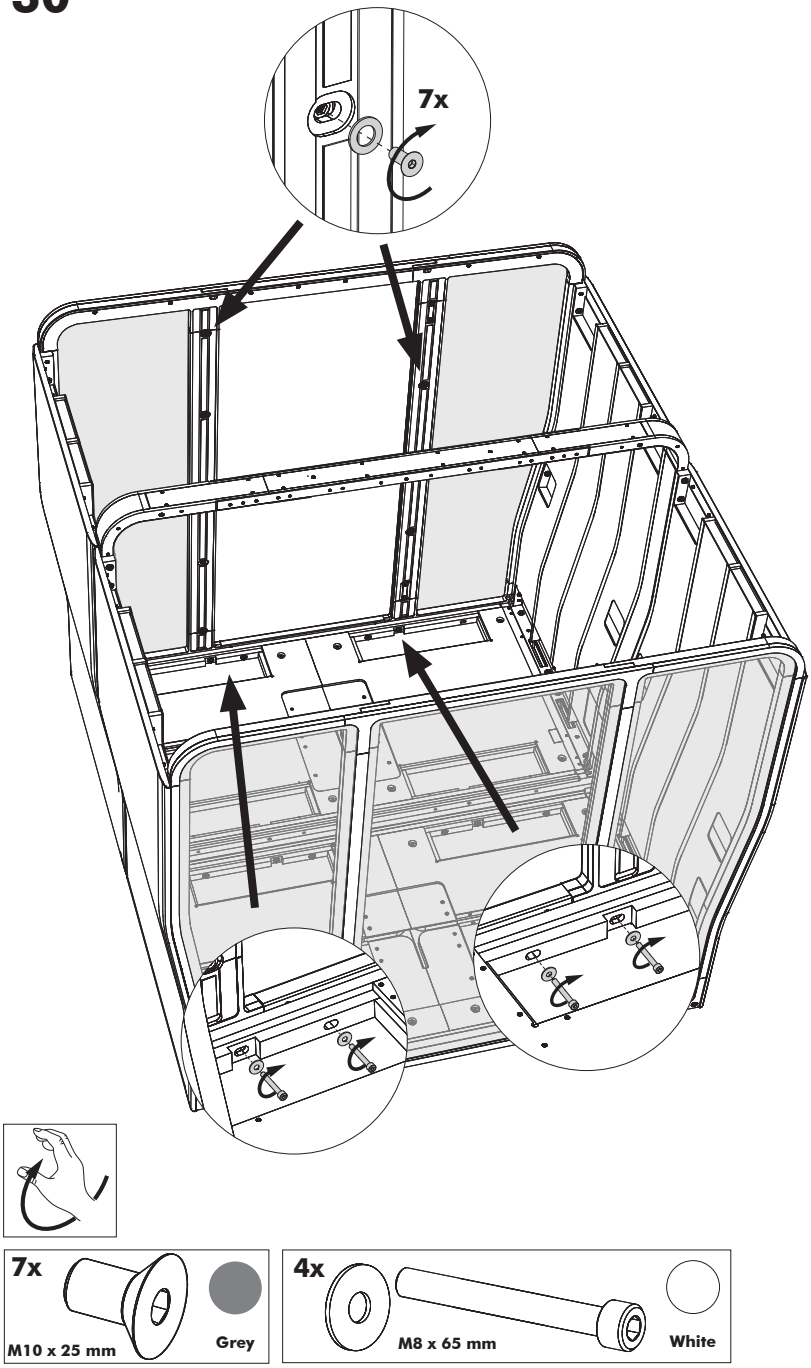

**31**

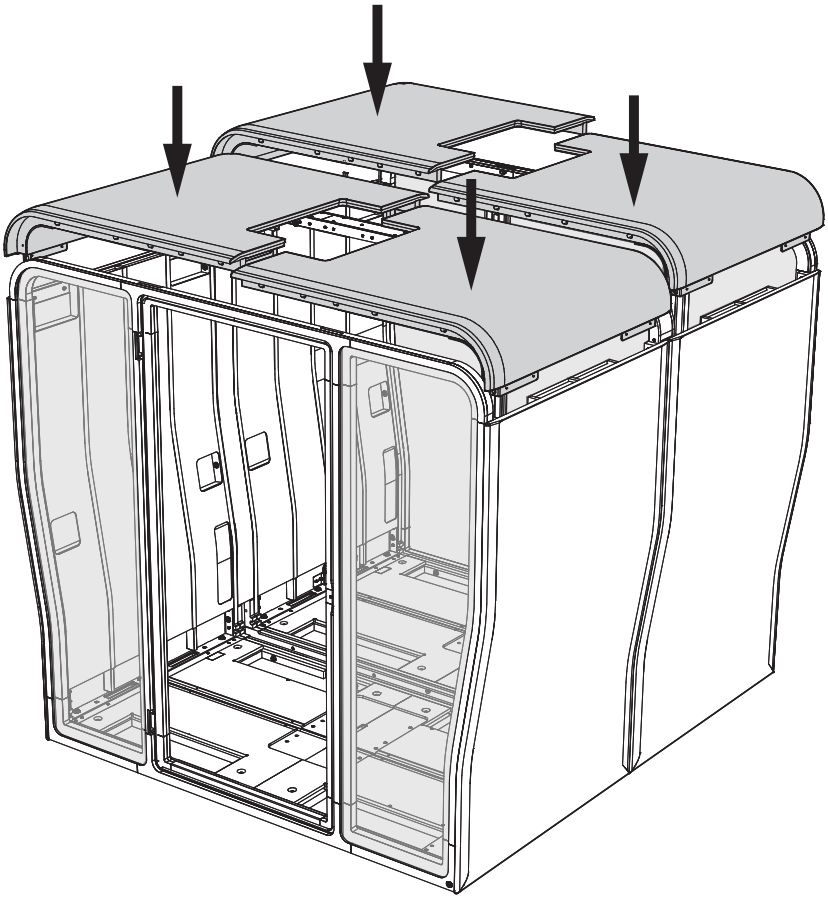

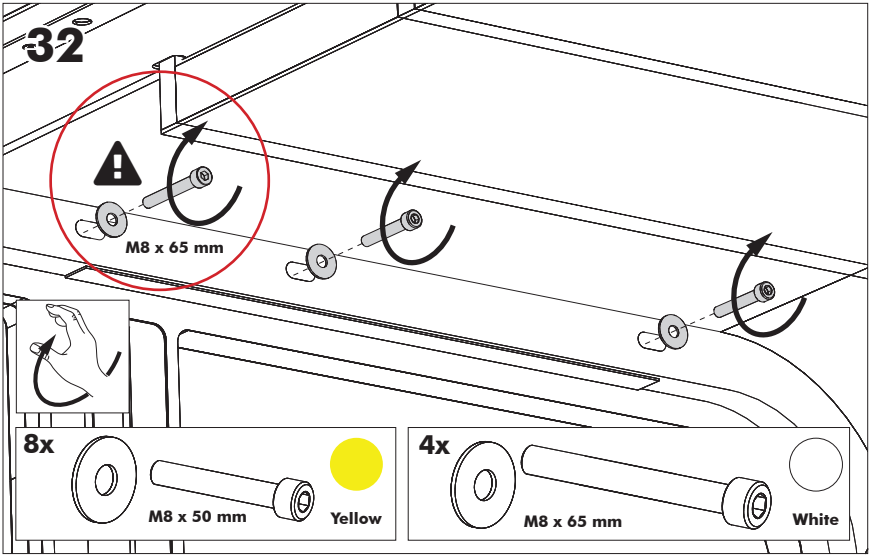
32
M8 x 65 mm
8x
M8 x 50 mm
Yellow
4x
M8 x 65 mm
White

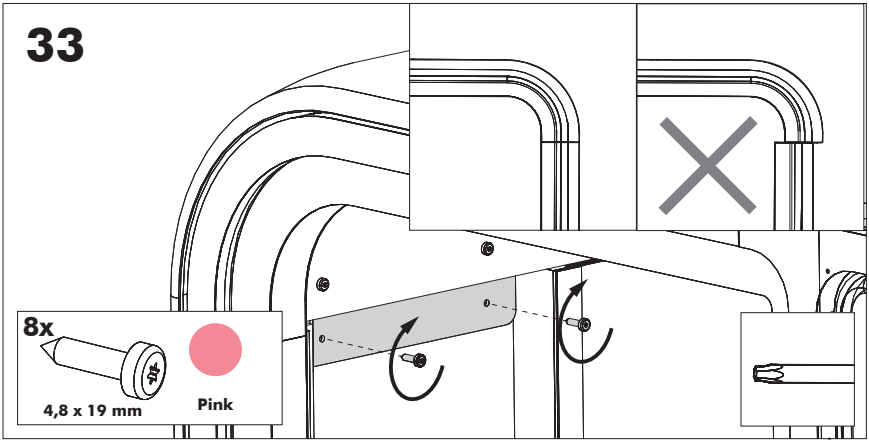
33
8x
4,8 x 19 mm
Pink

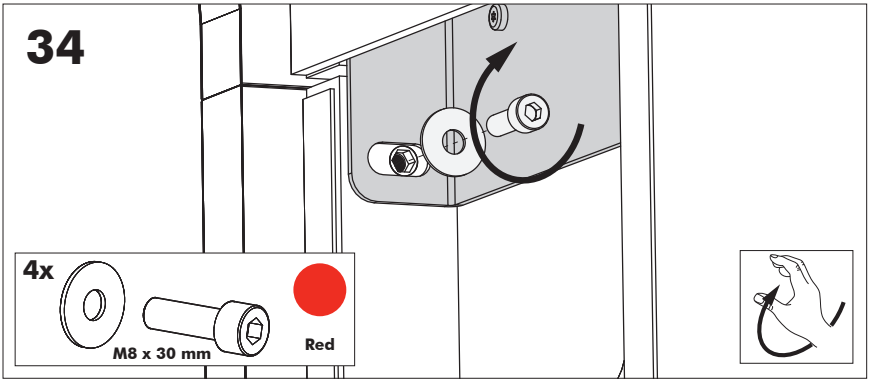
34
4x
M8 x 30 mm
Red

# 35

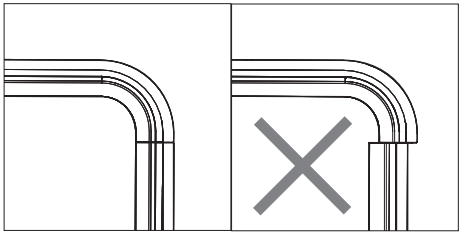

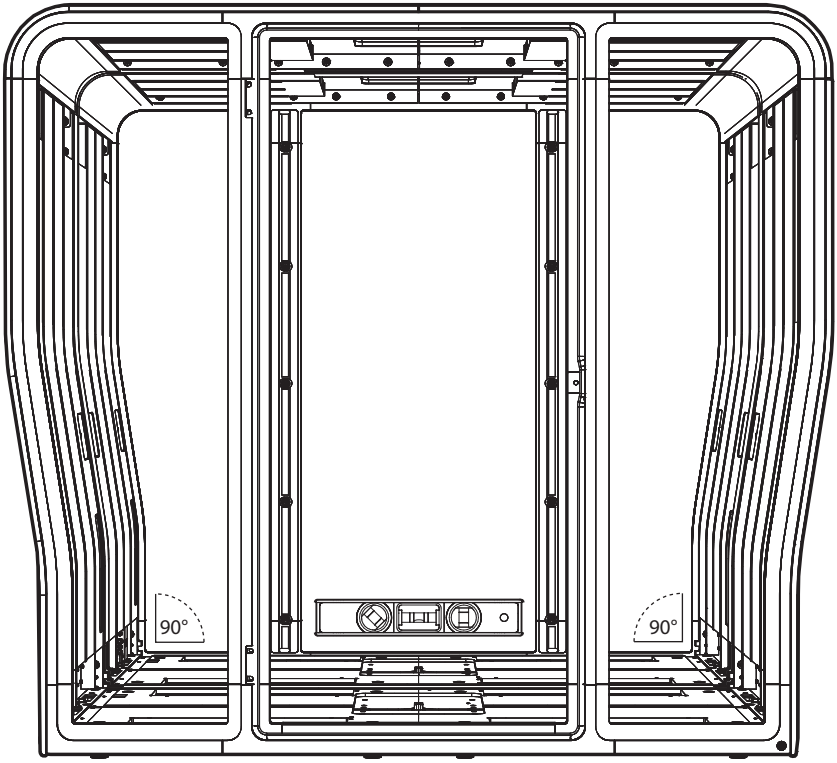


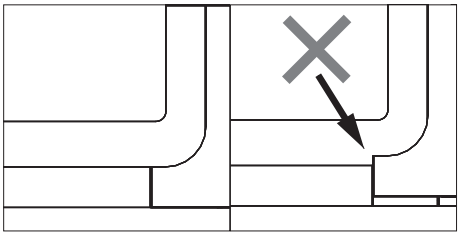

# 36

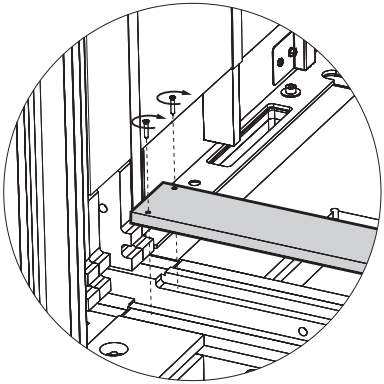

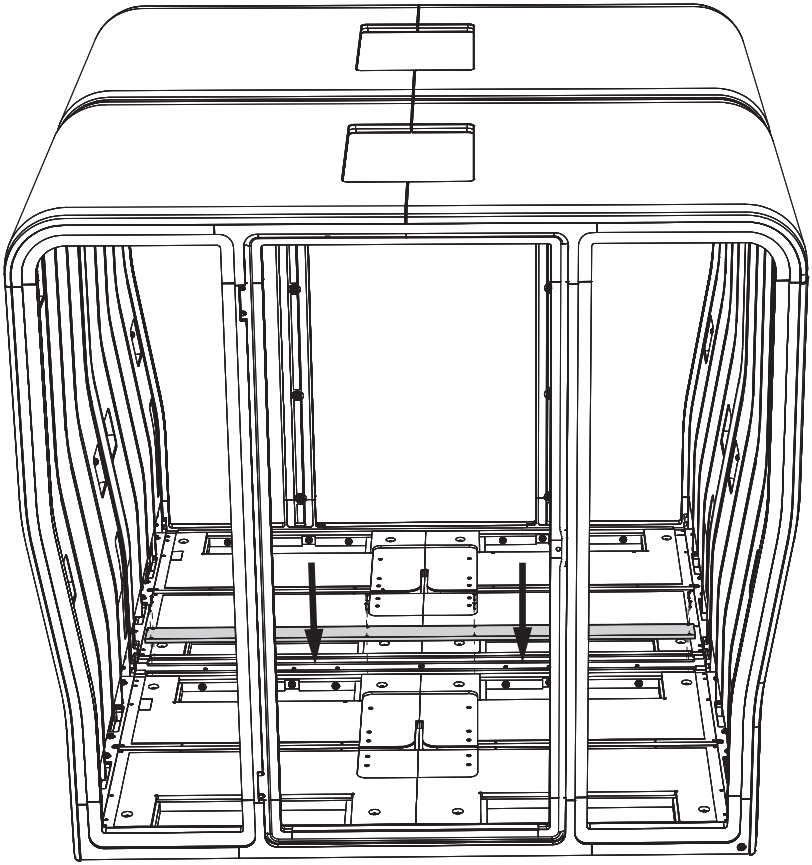

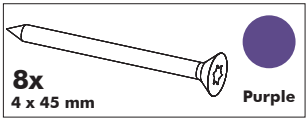


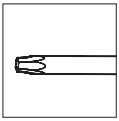

# 37

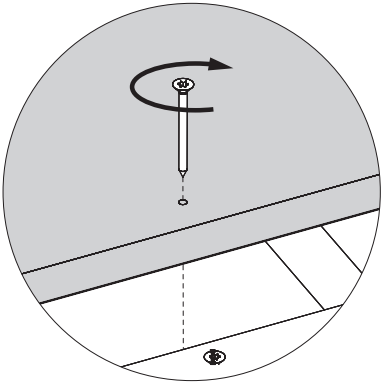

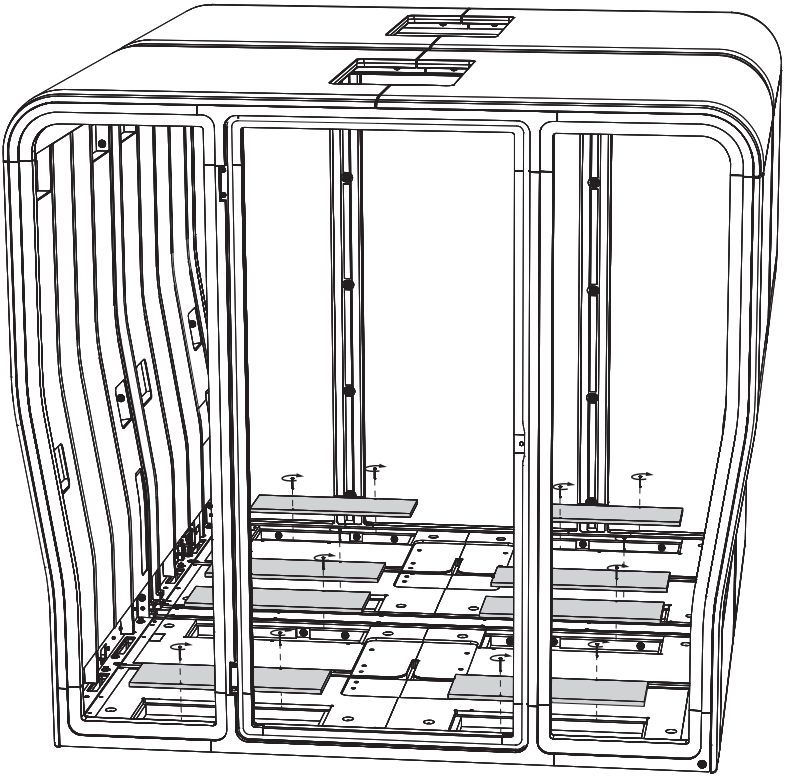

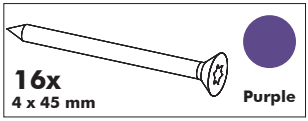


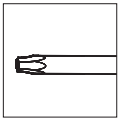

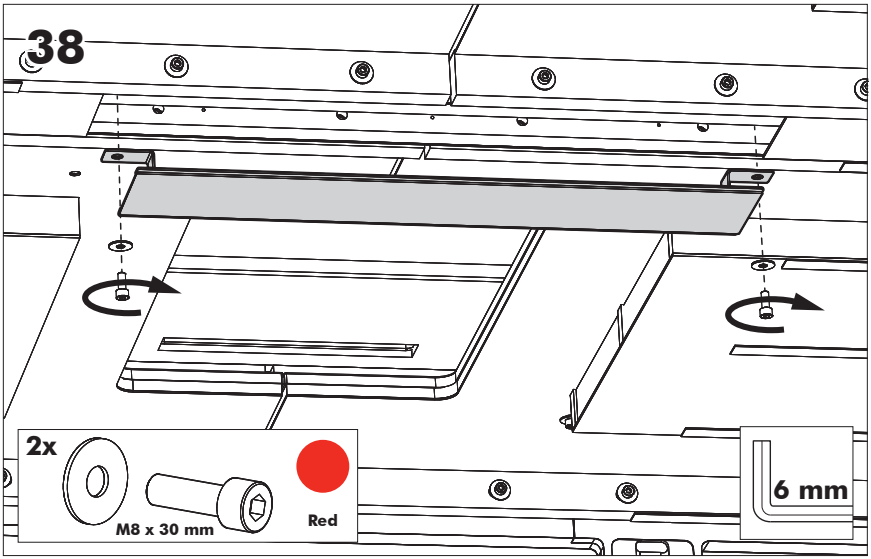
38
2x
M8 x 30 mm
Red
6 mm

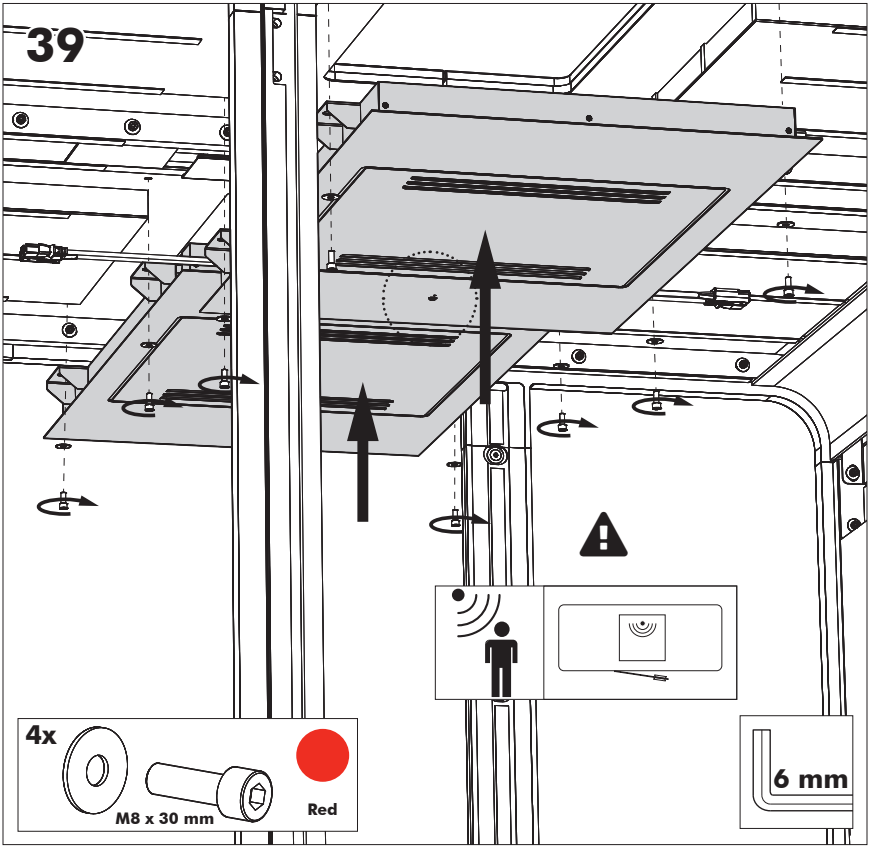
39
4x
M8 x 30 mm
Red
6 mm

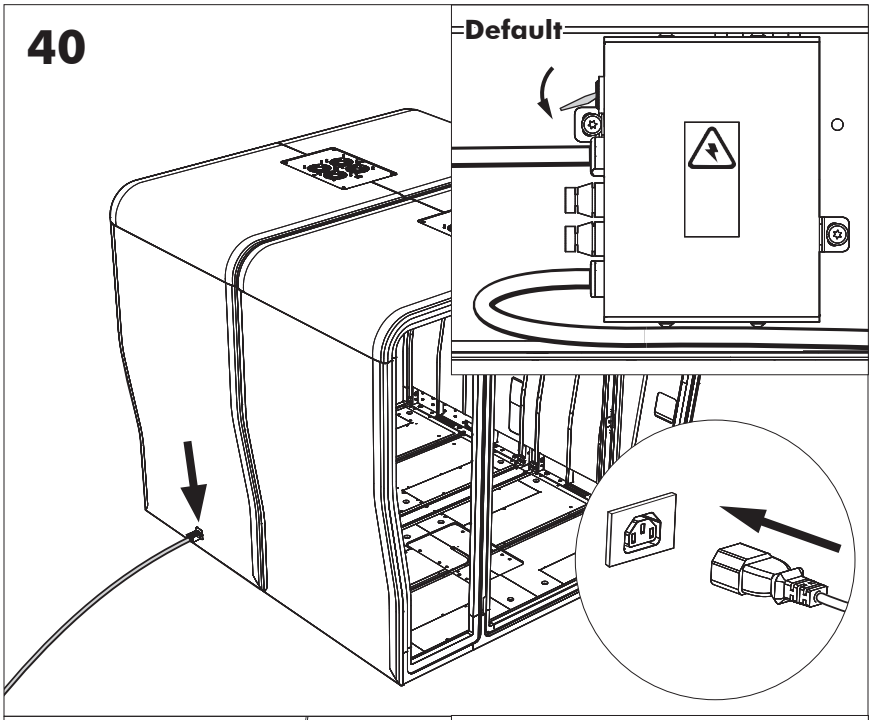
40
Default

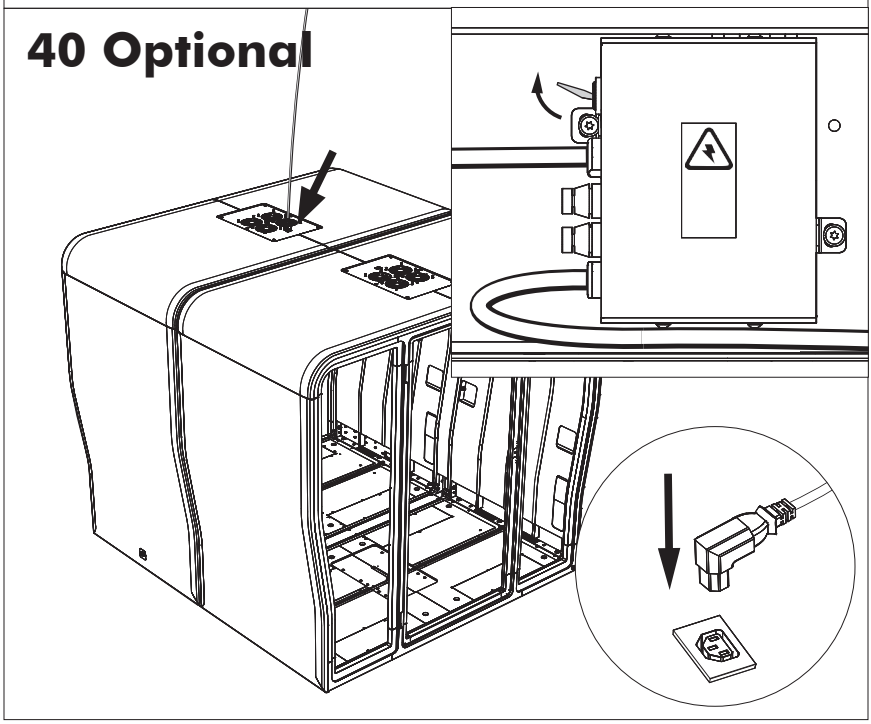
40 Optional

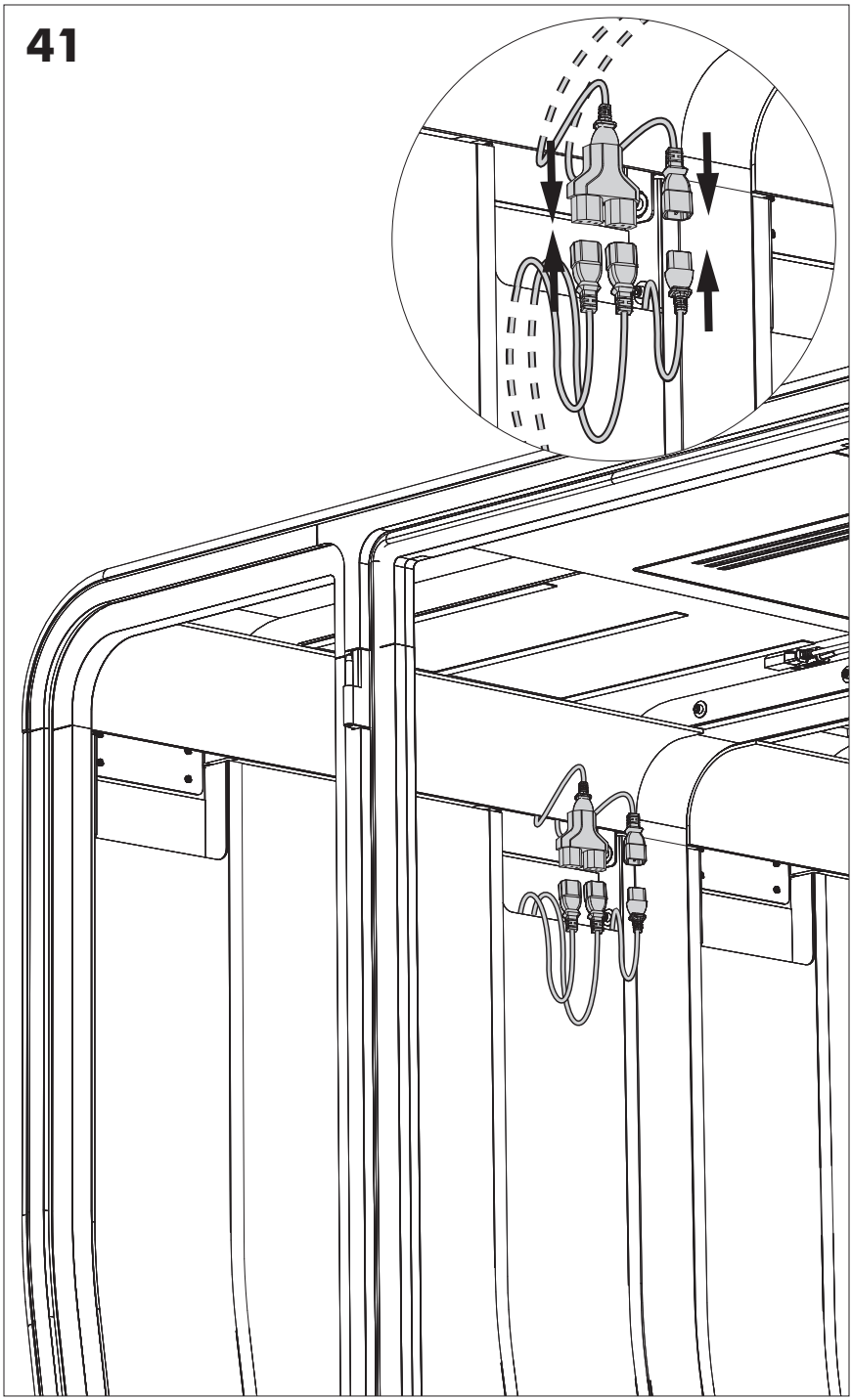
41

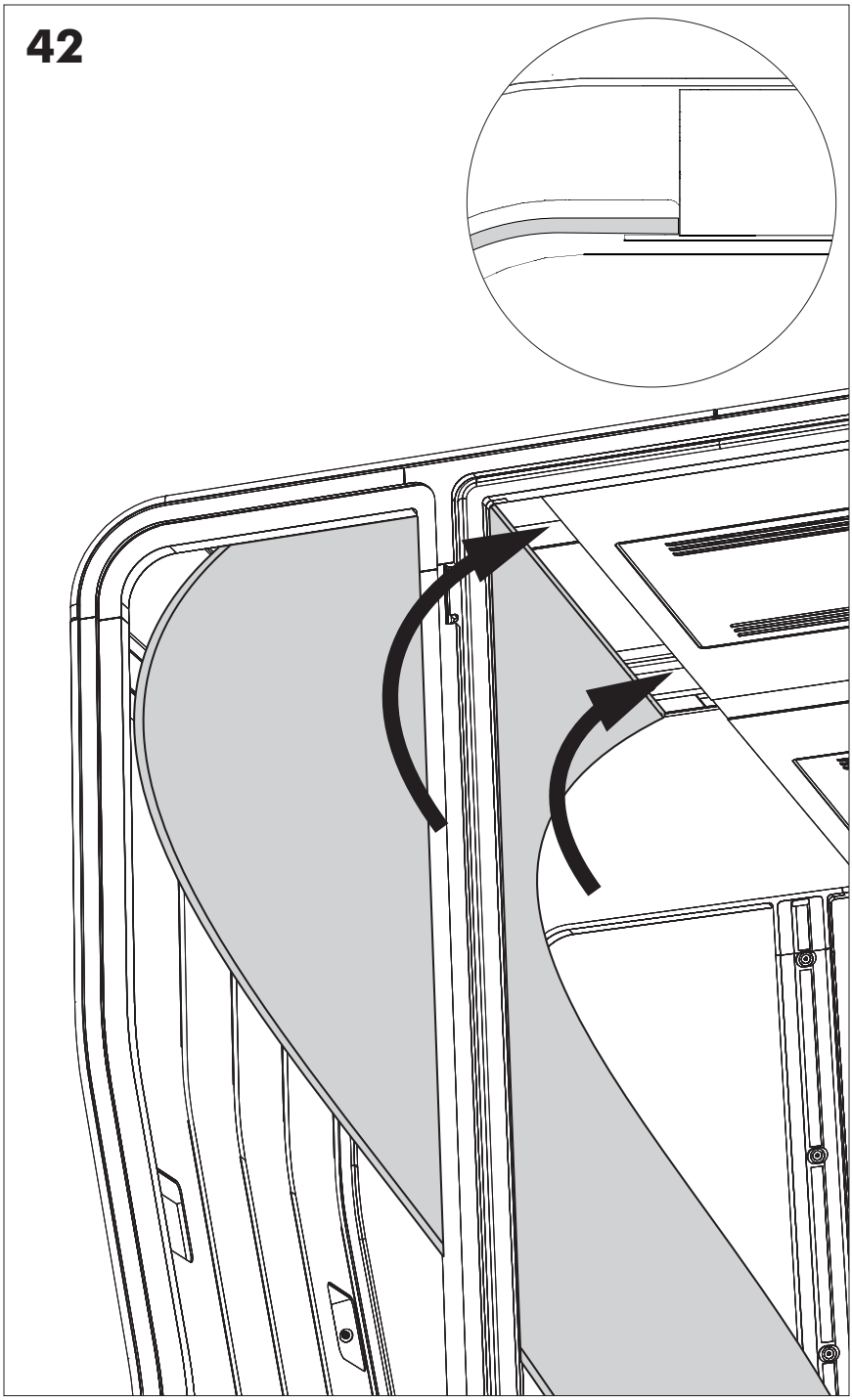
42

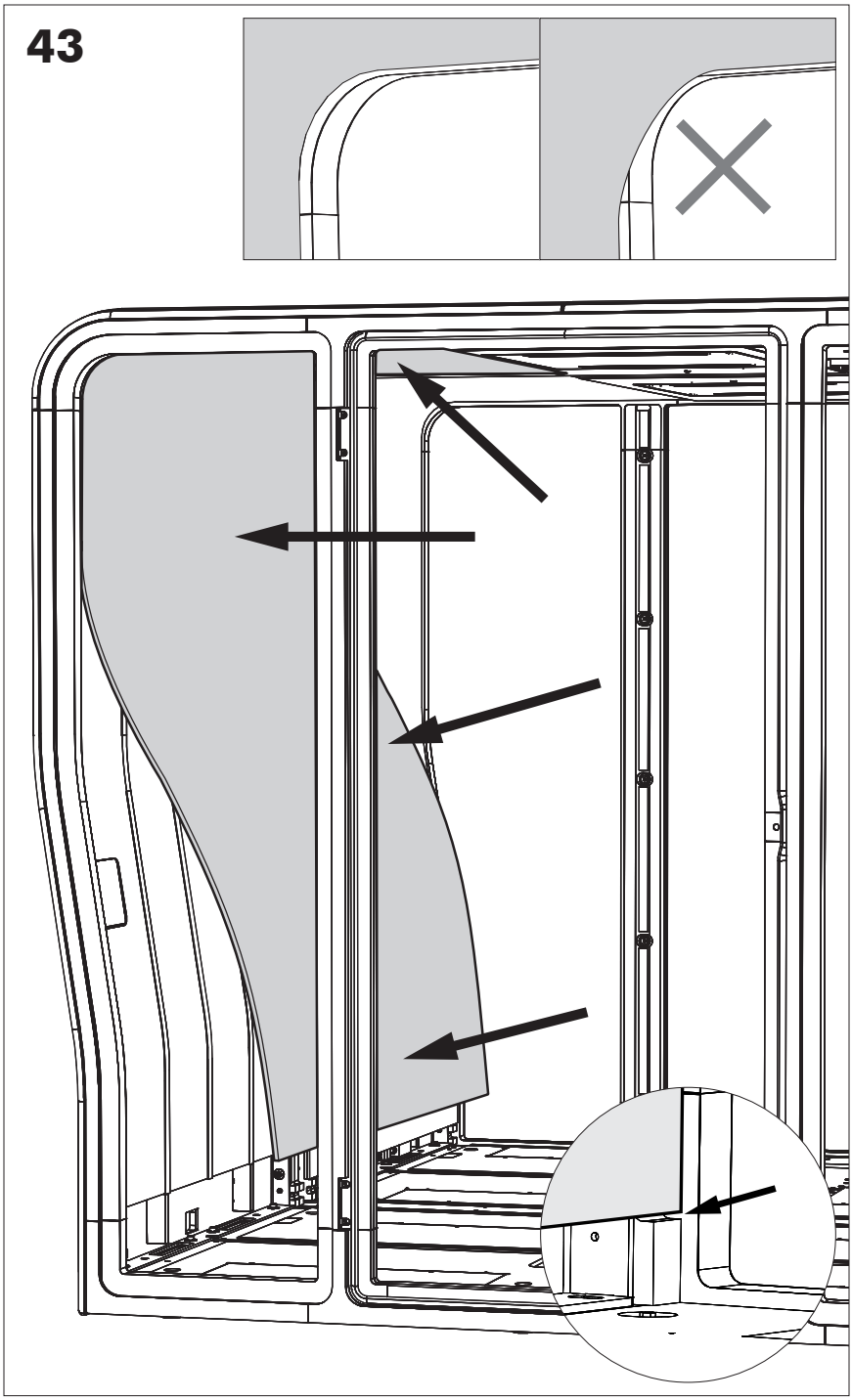
43

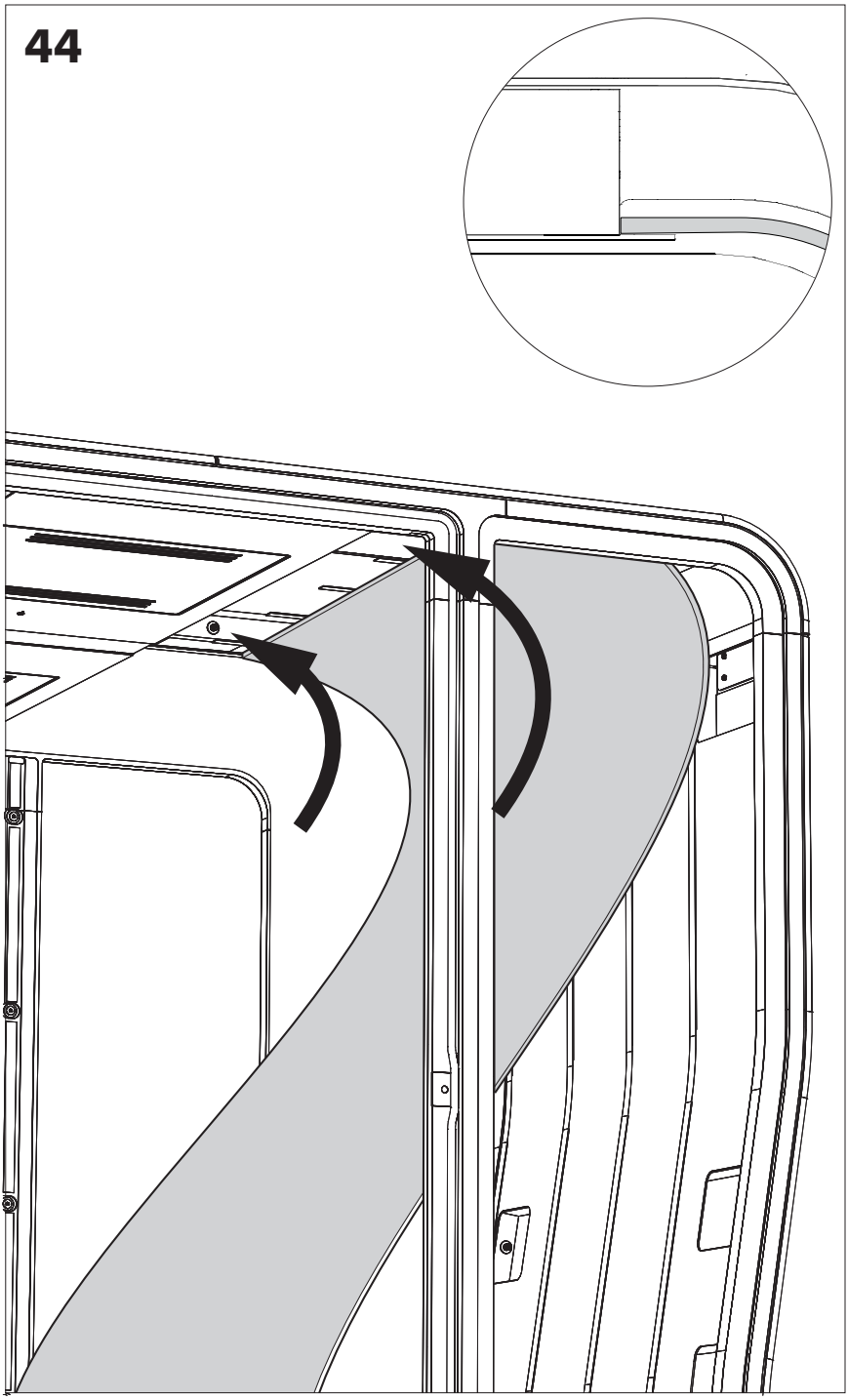
44

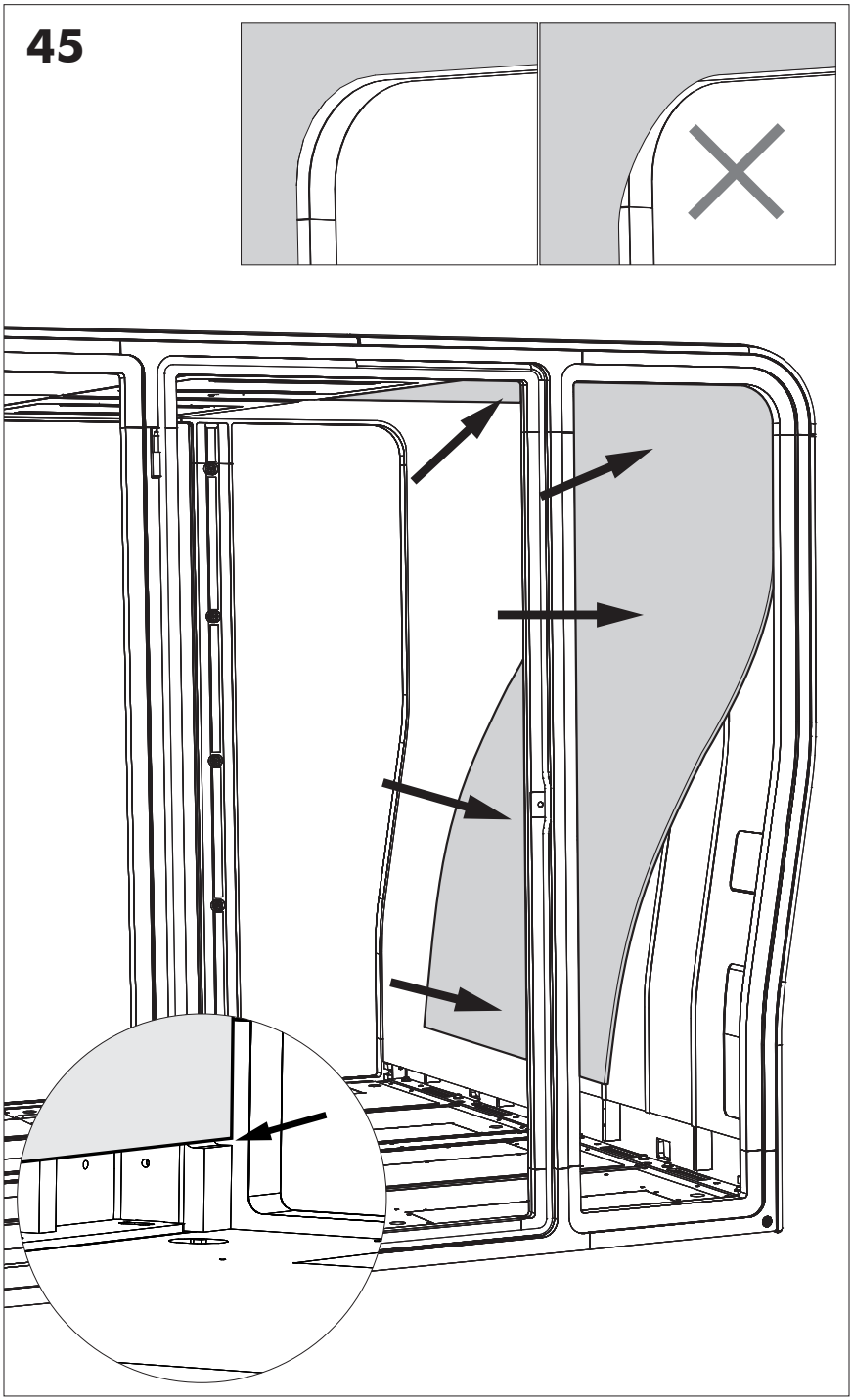
45

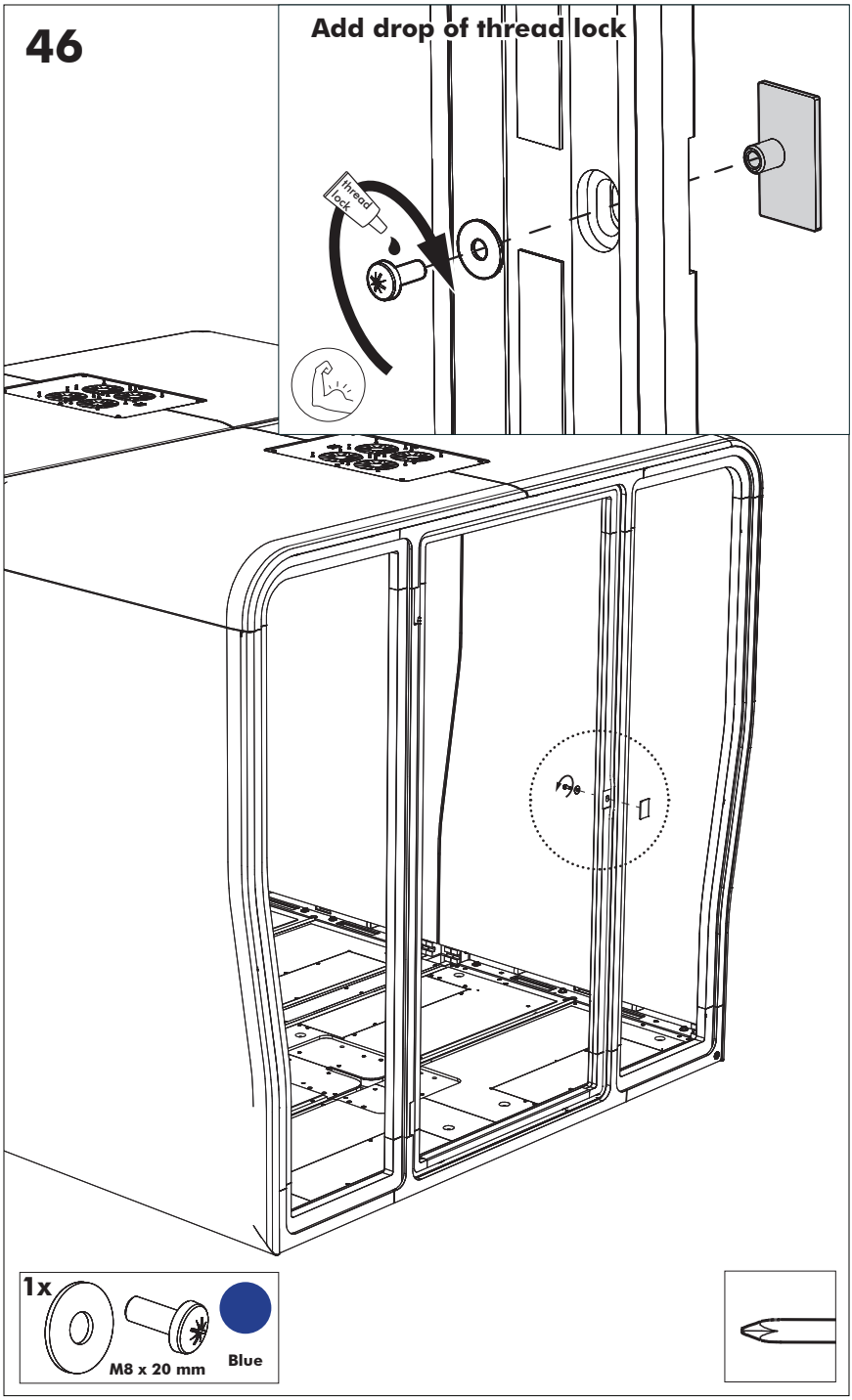
46
Add drop of thread lock
Thread lock
1x
M8 x 20 mm
Blue

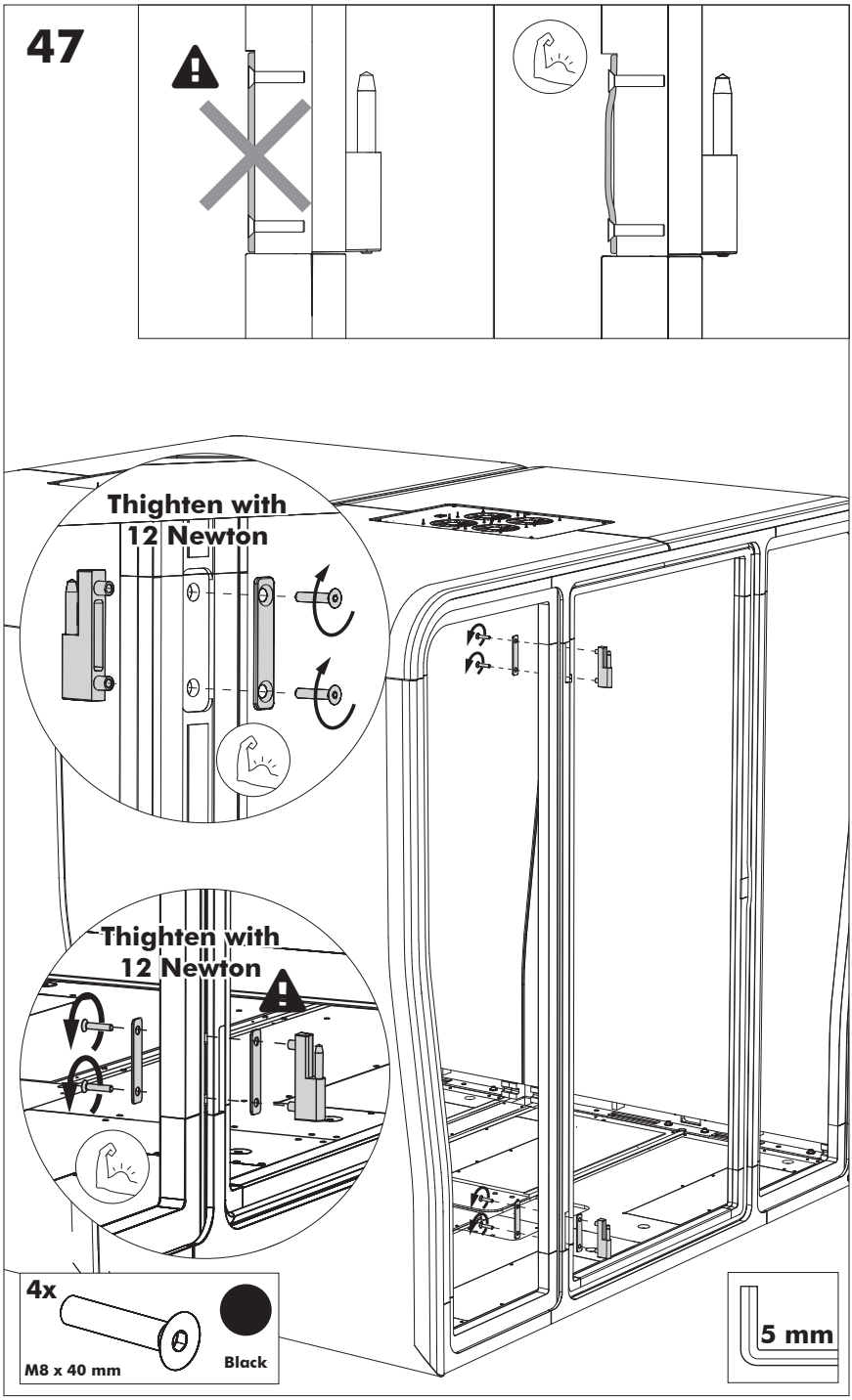
47
Thighten with
12 Newton
Thighten with
12 Newton
4x
M8 x 40 mm
Black
5 mm

48

90°

5 mm

a

b

c

d

**49**

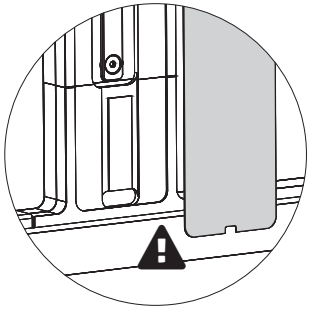

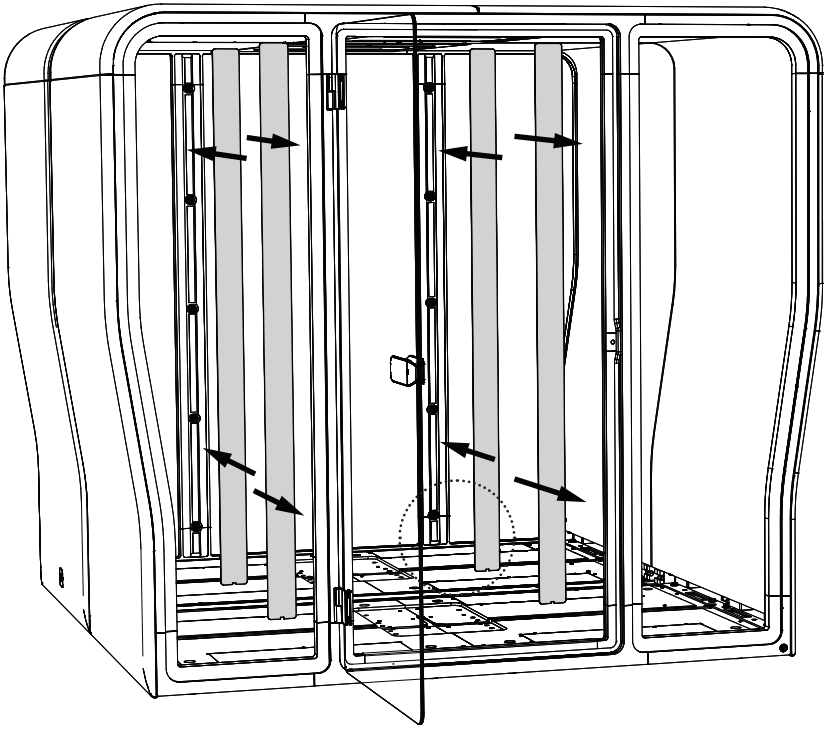

**50**

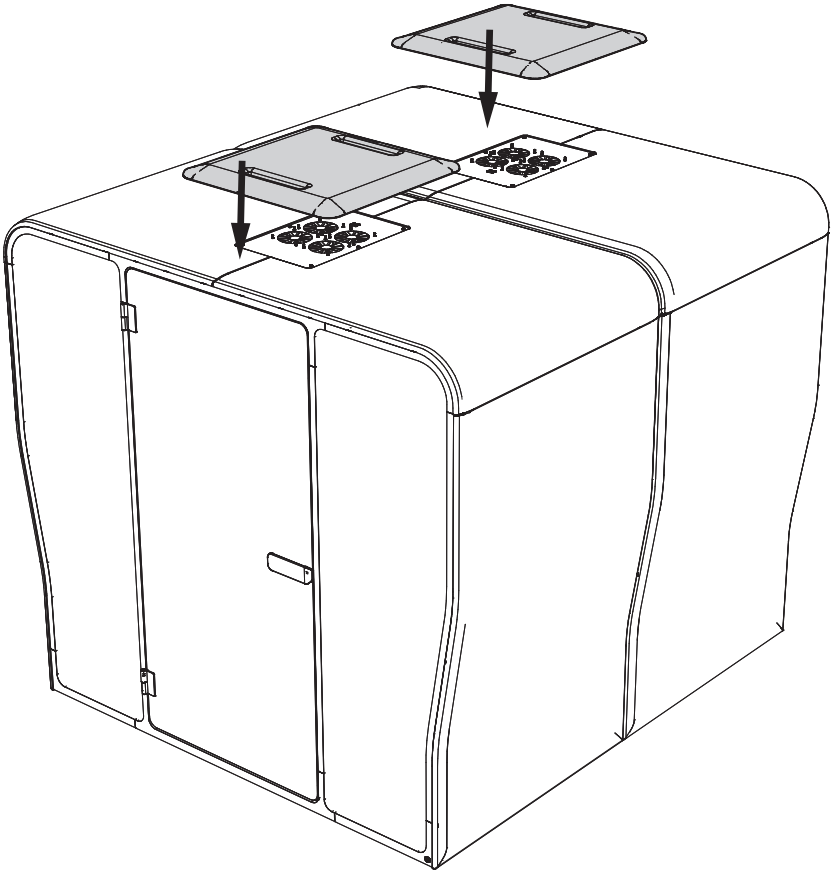

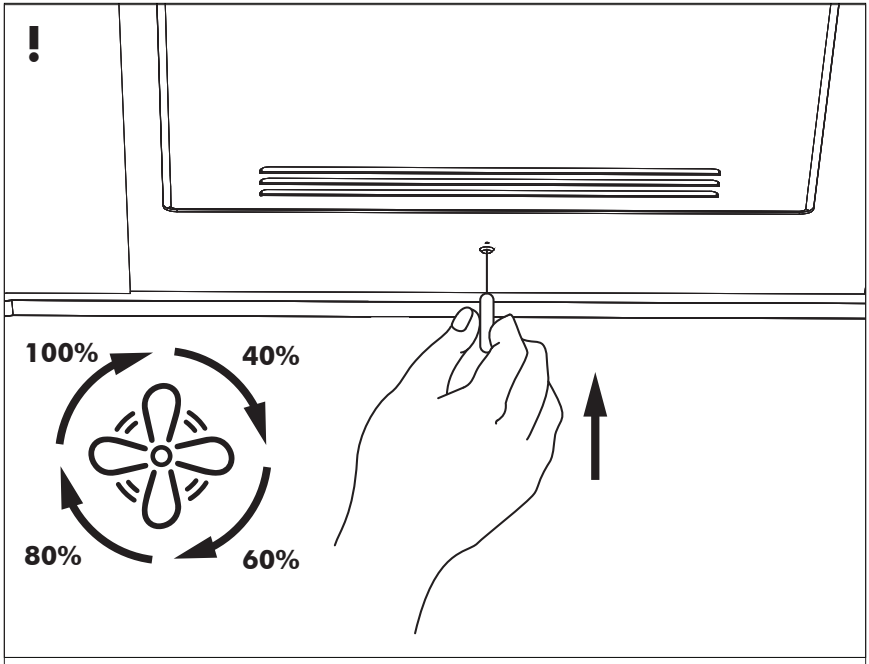


**Change the default airflow rate during occupancy:**
Press the button underneath the discrete hole next to the PIR motion detector using a pin to cycle through the various fan settings.

The LED Lighting blinks briefly when changing to a next setting.
The LED Lighting blinks twice when reaching the 40% setting.

**Fan Settings**
100%: 31 l/sec
80%: 25 l/sec
60%: 20 l/sec (factory setting)
40%: 12 l/sec

## No table P.54

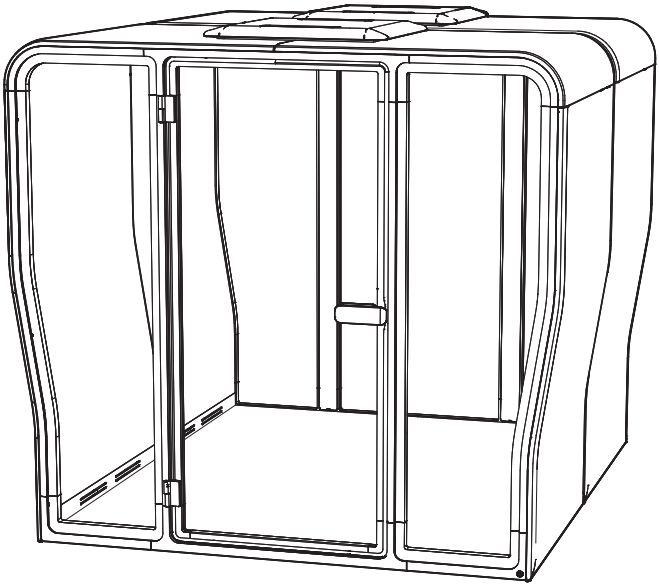

## Optional Table + Electrification P.58

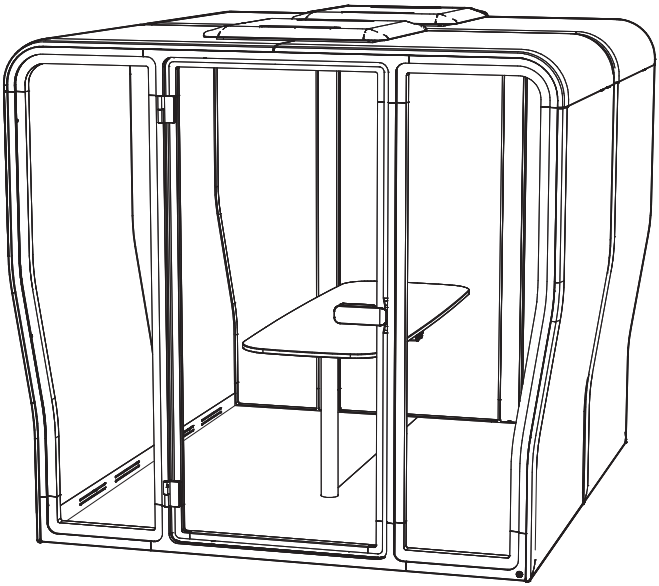

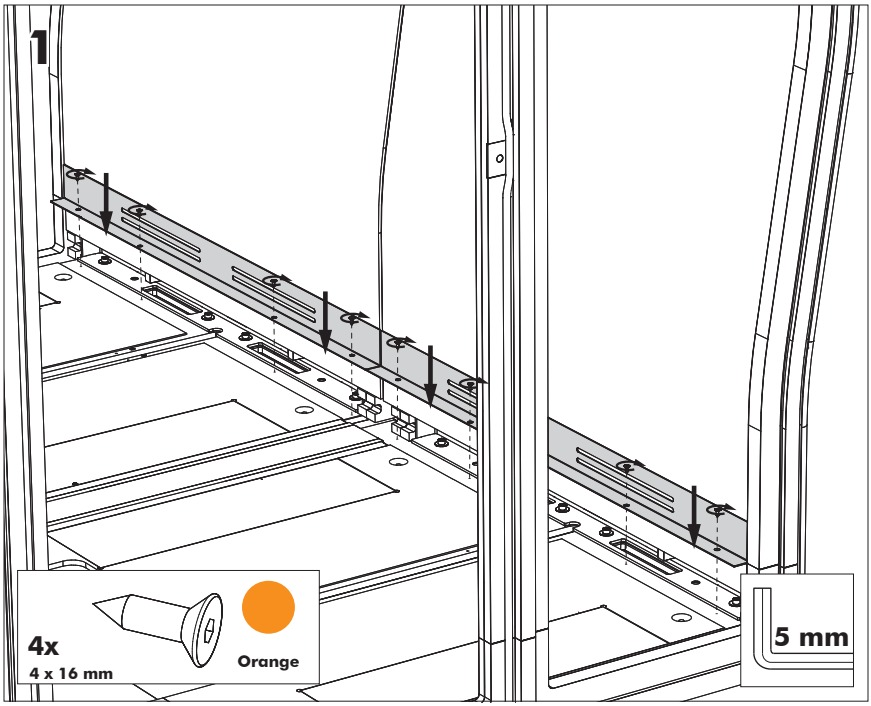
1
4x
4 x 16 mm
Orange
5 mm

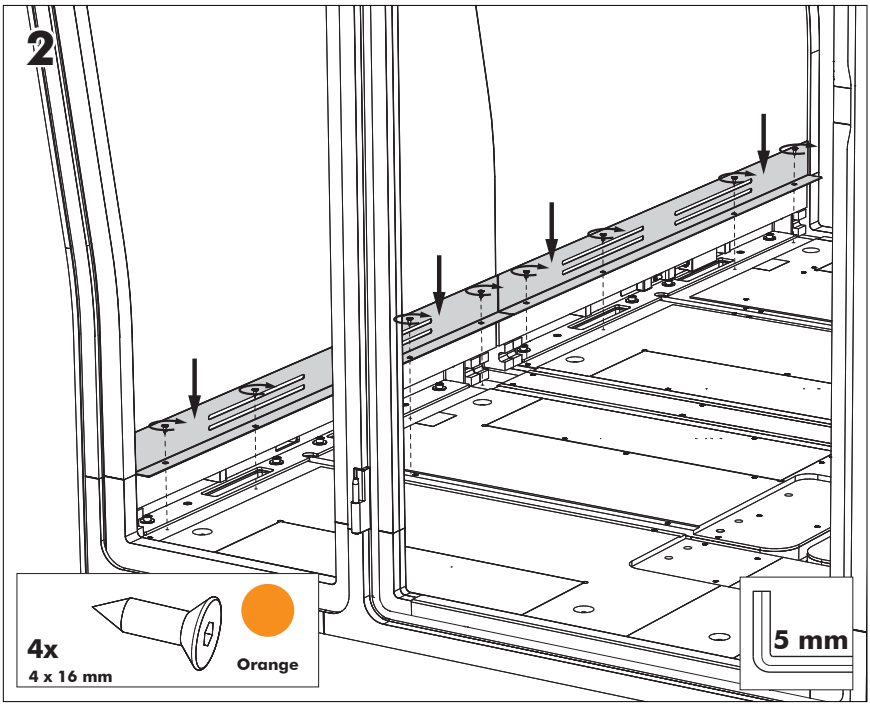
2
4x
4 x 16 mm
Orange
5 mm

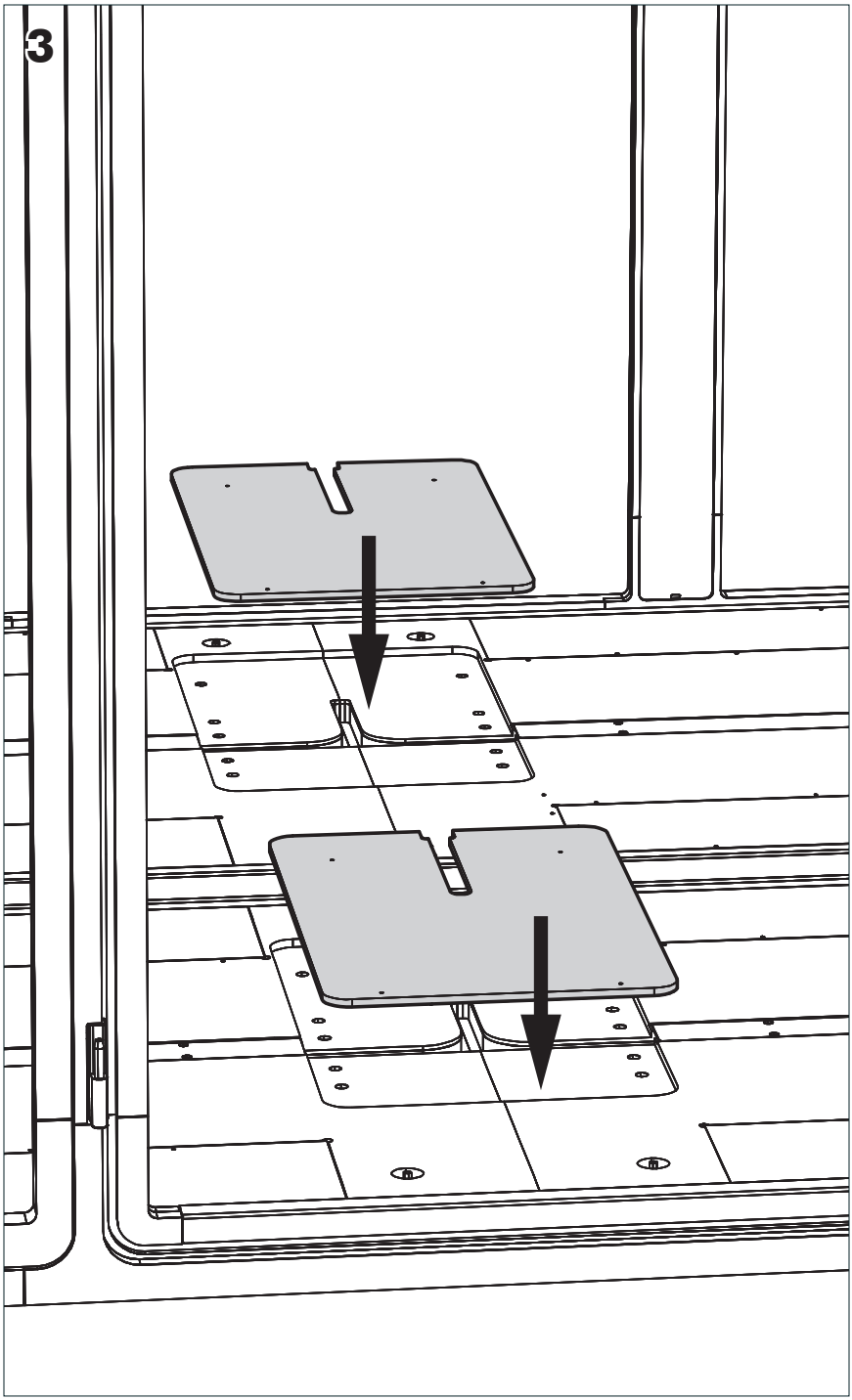
3

# 4

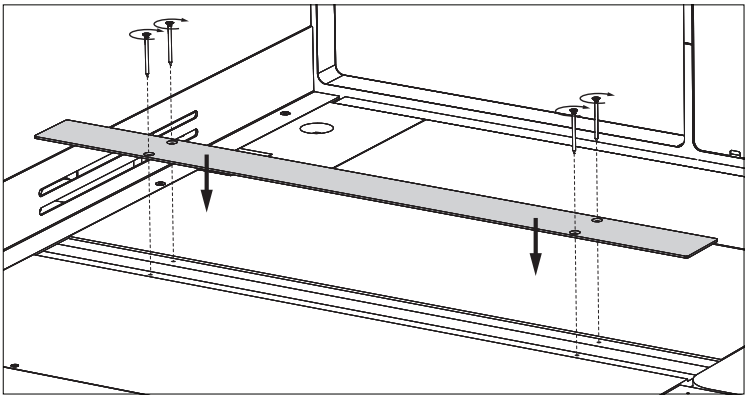

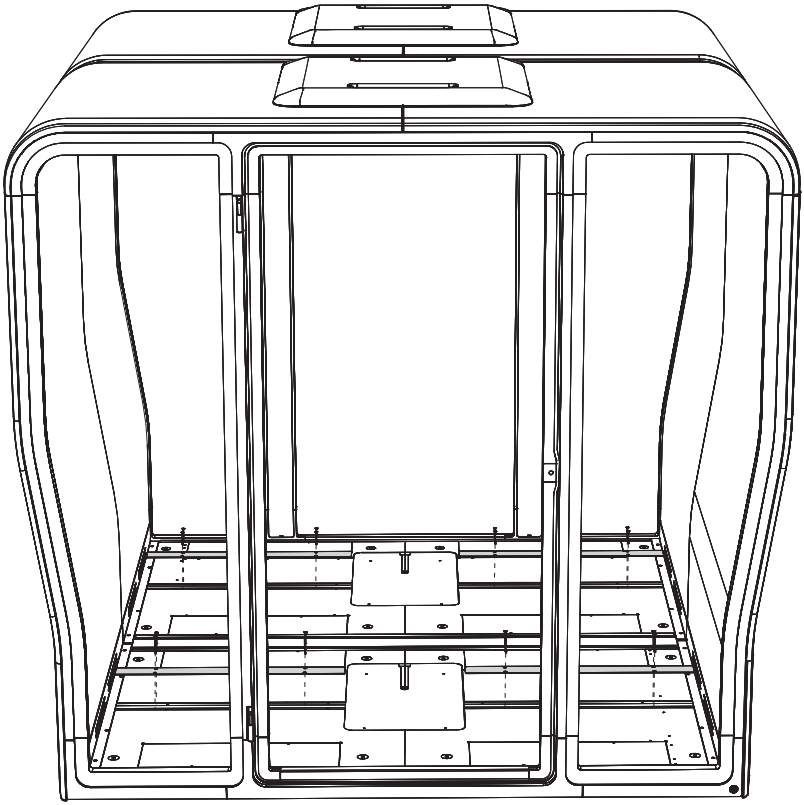

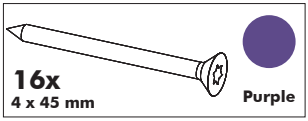


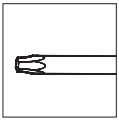

5

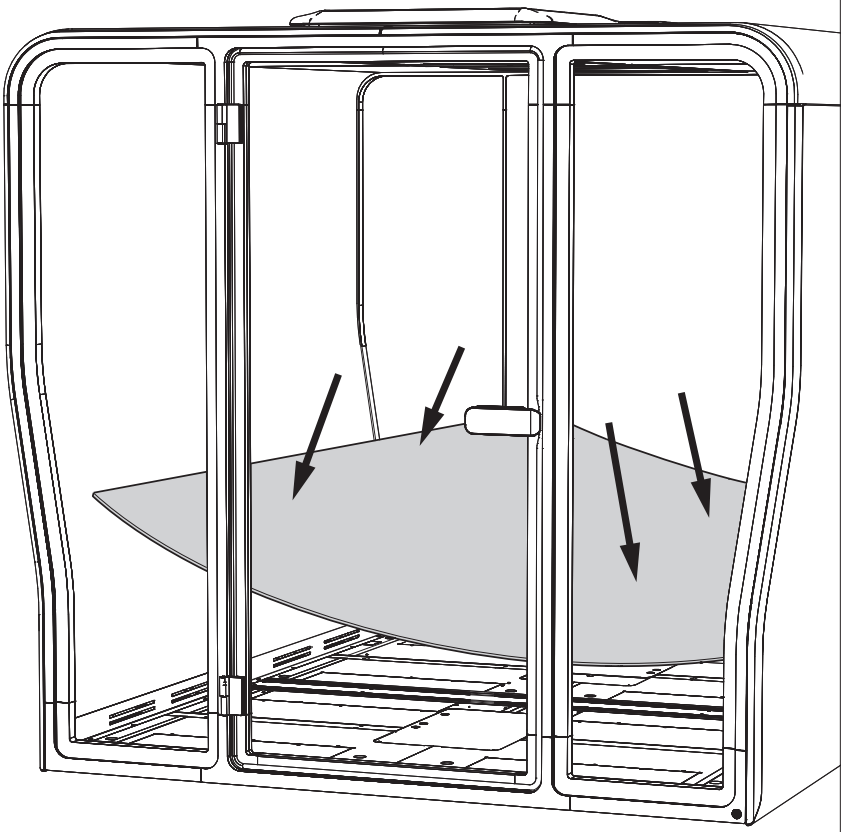

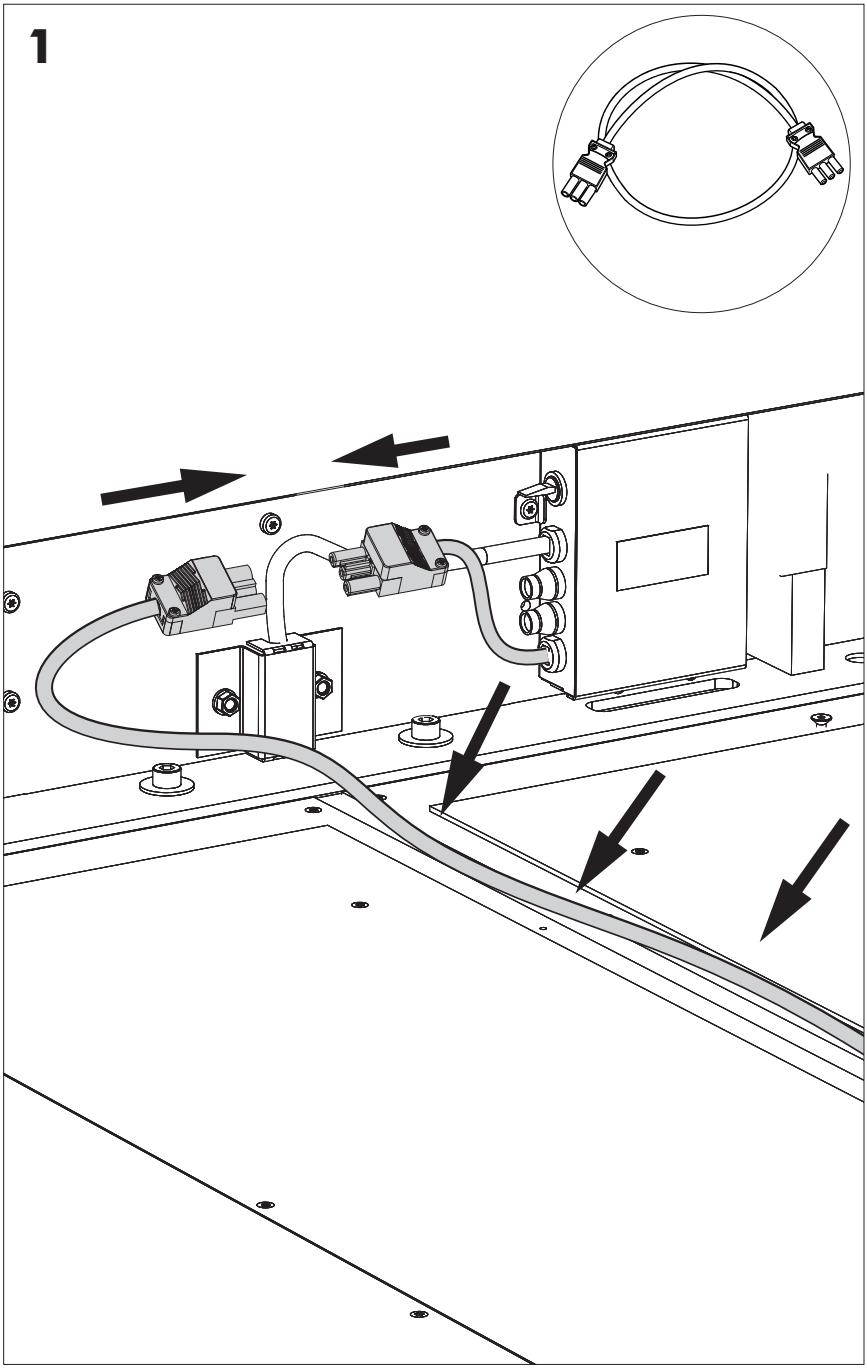
1

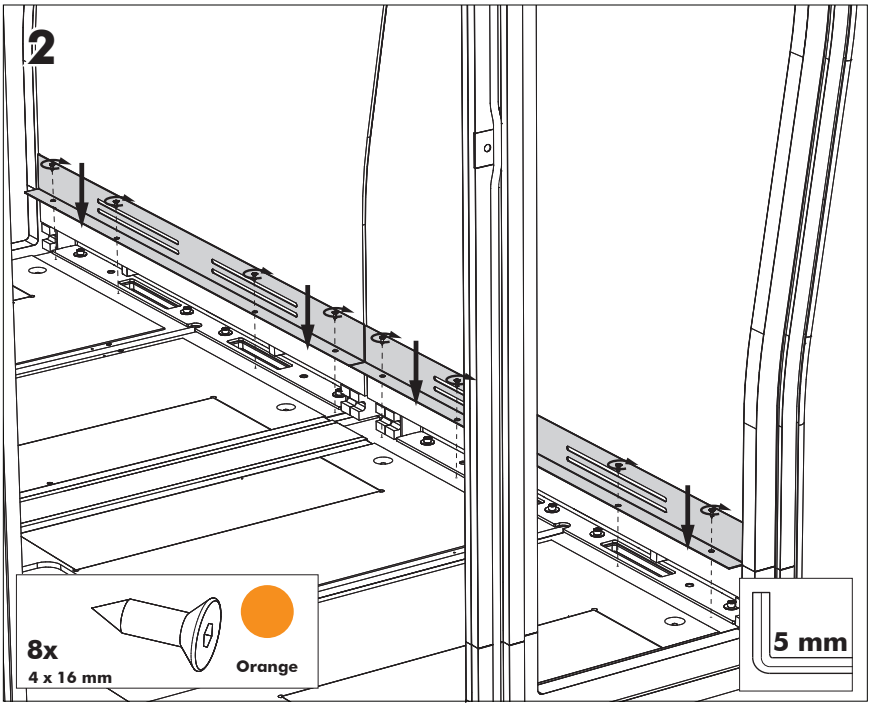
2
8x
4 x 16 mm
Orange
5 mm

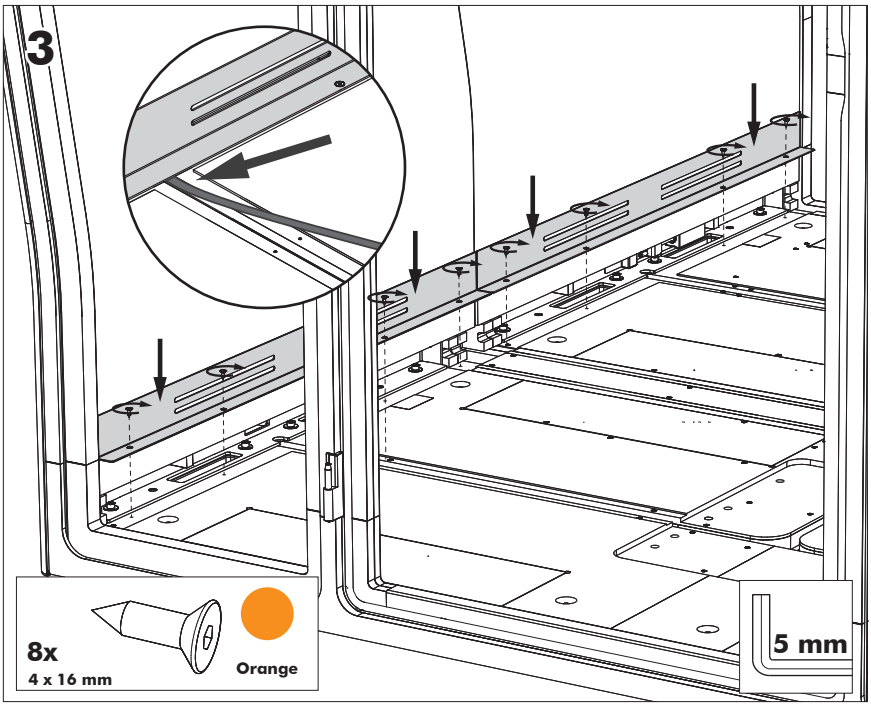
3
8x
4 x 16 mm
Orange
5 mm

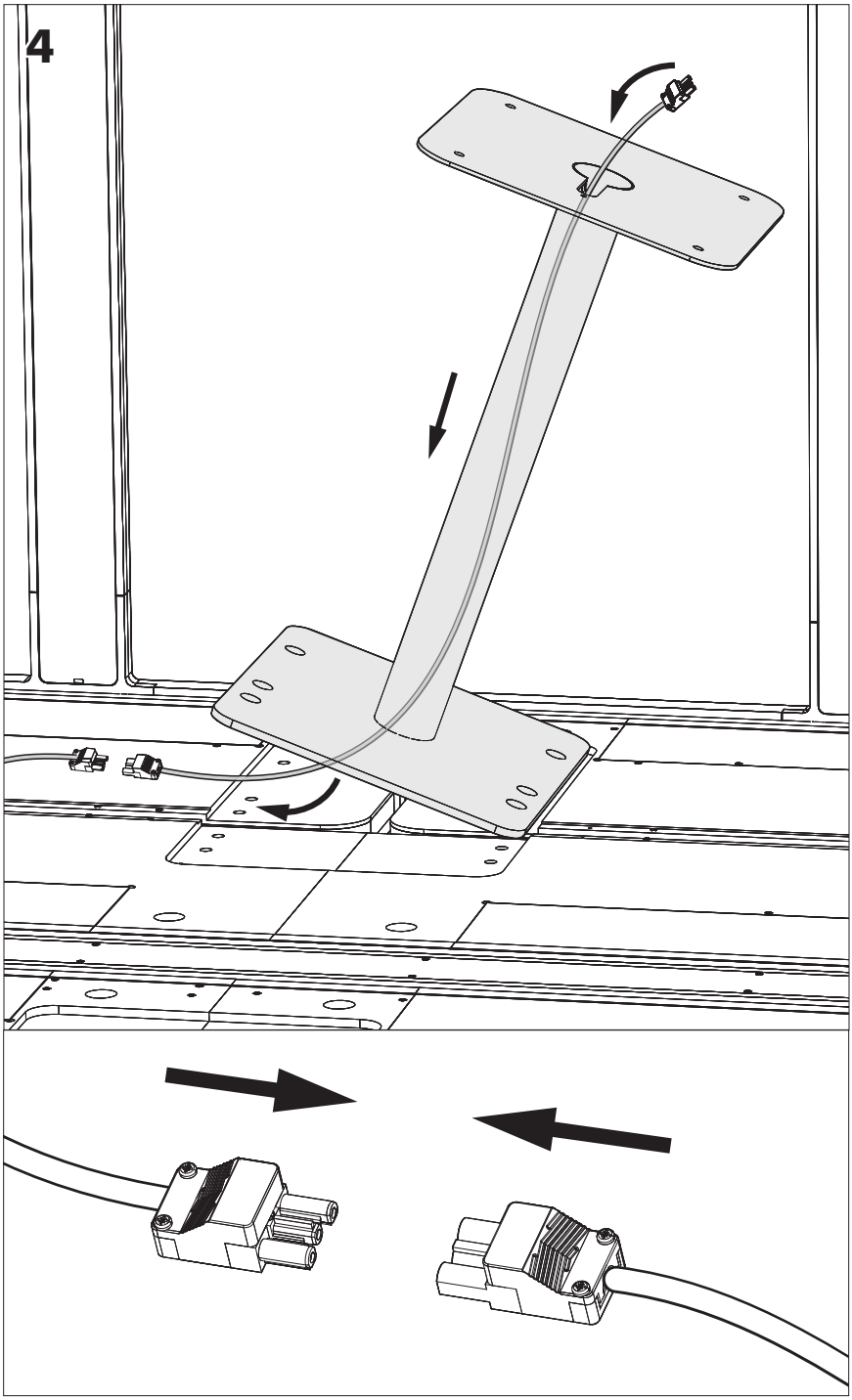
4

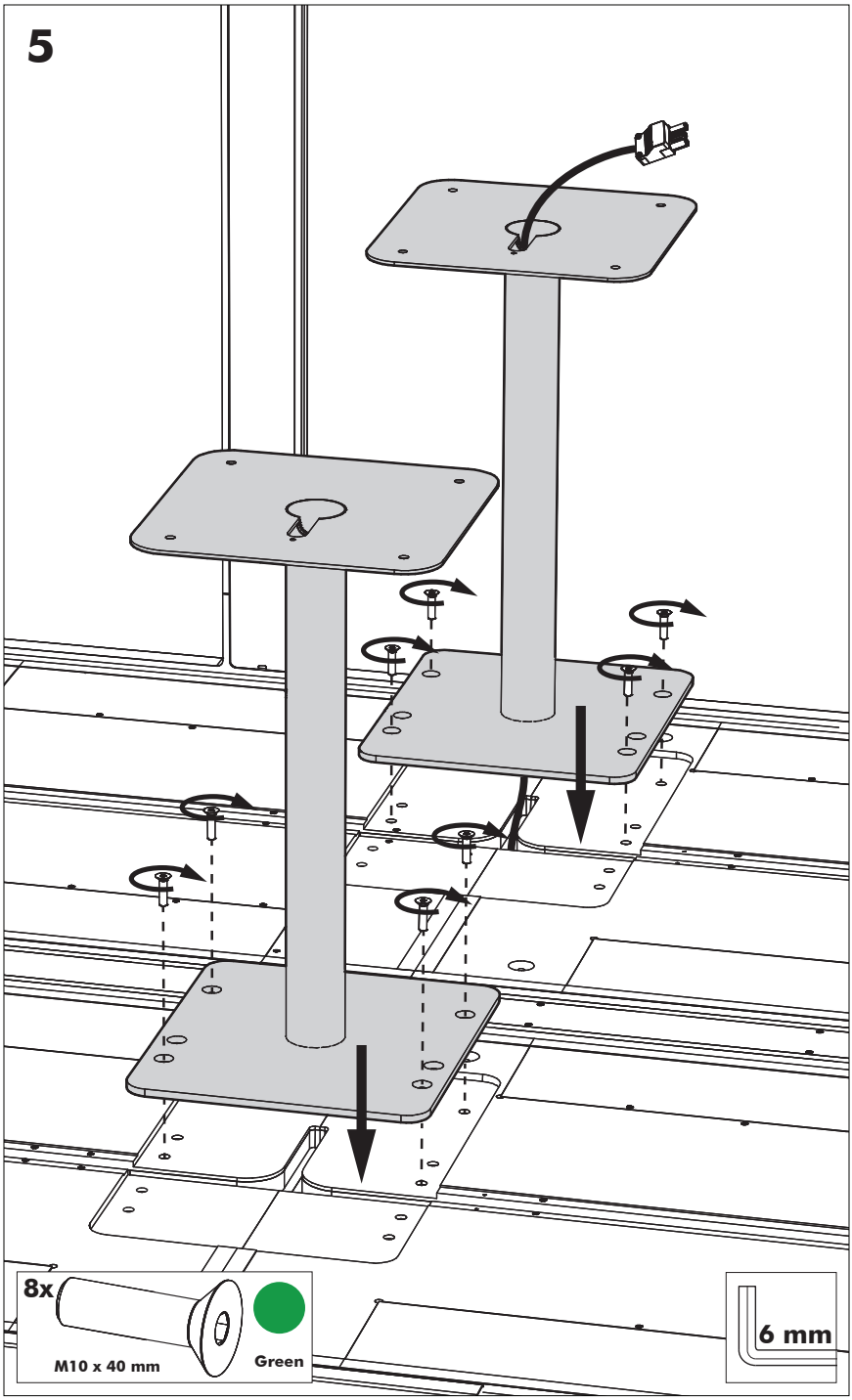
5
8x
M10 x 40 mm
Green
6 mm

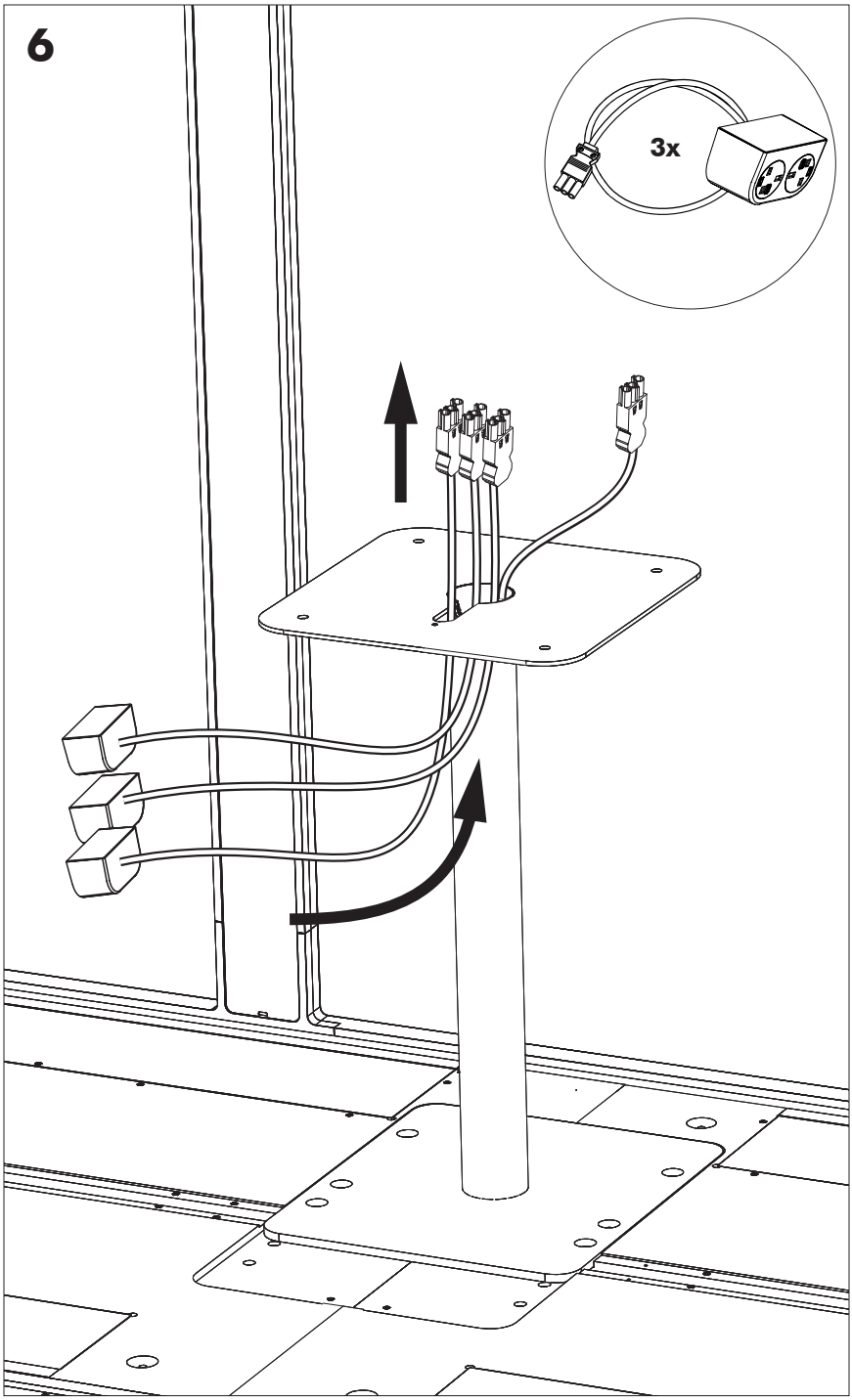
6
3x

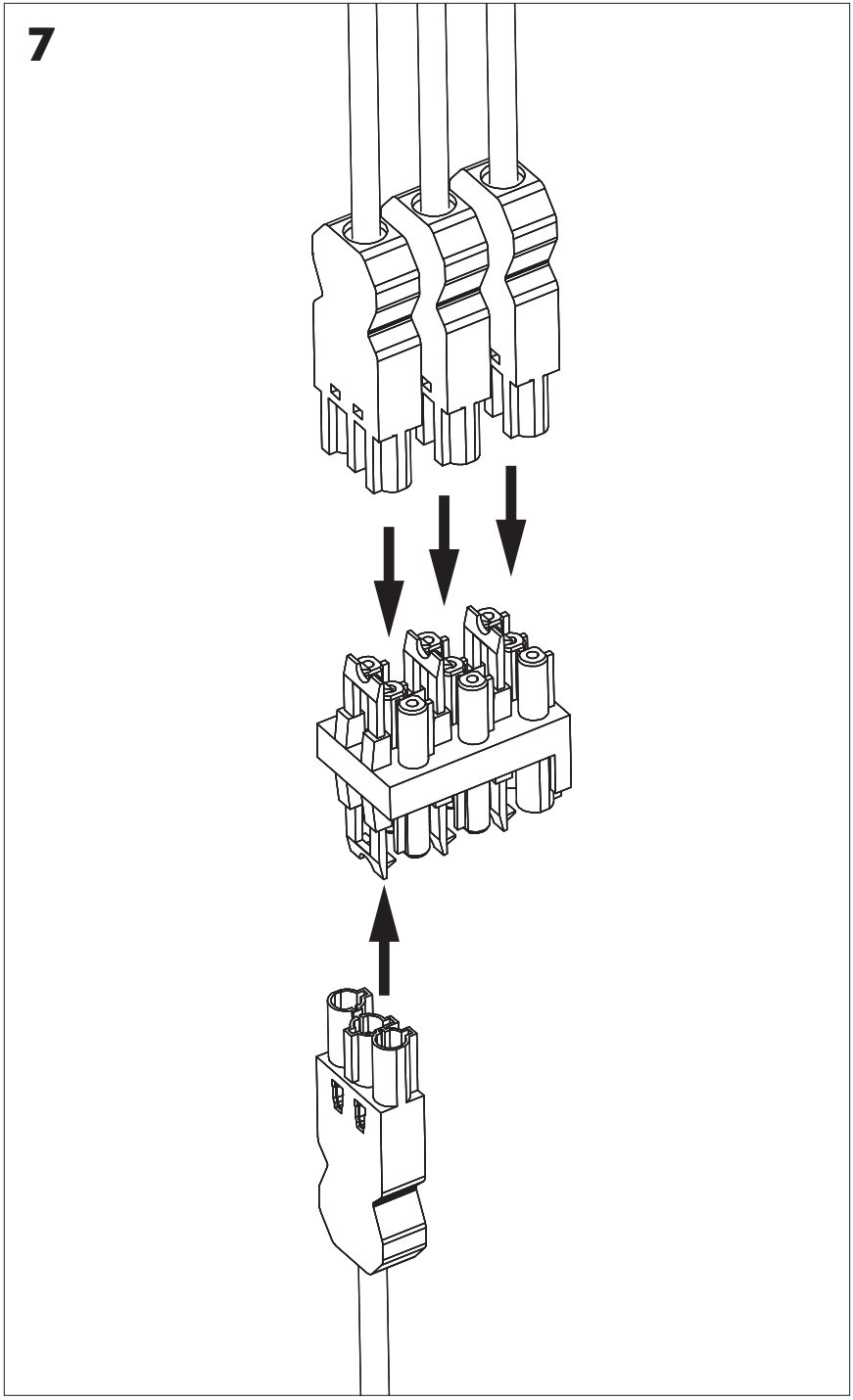
7

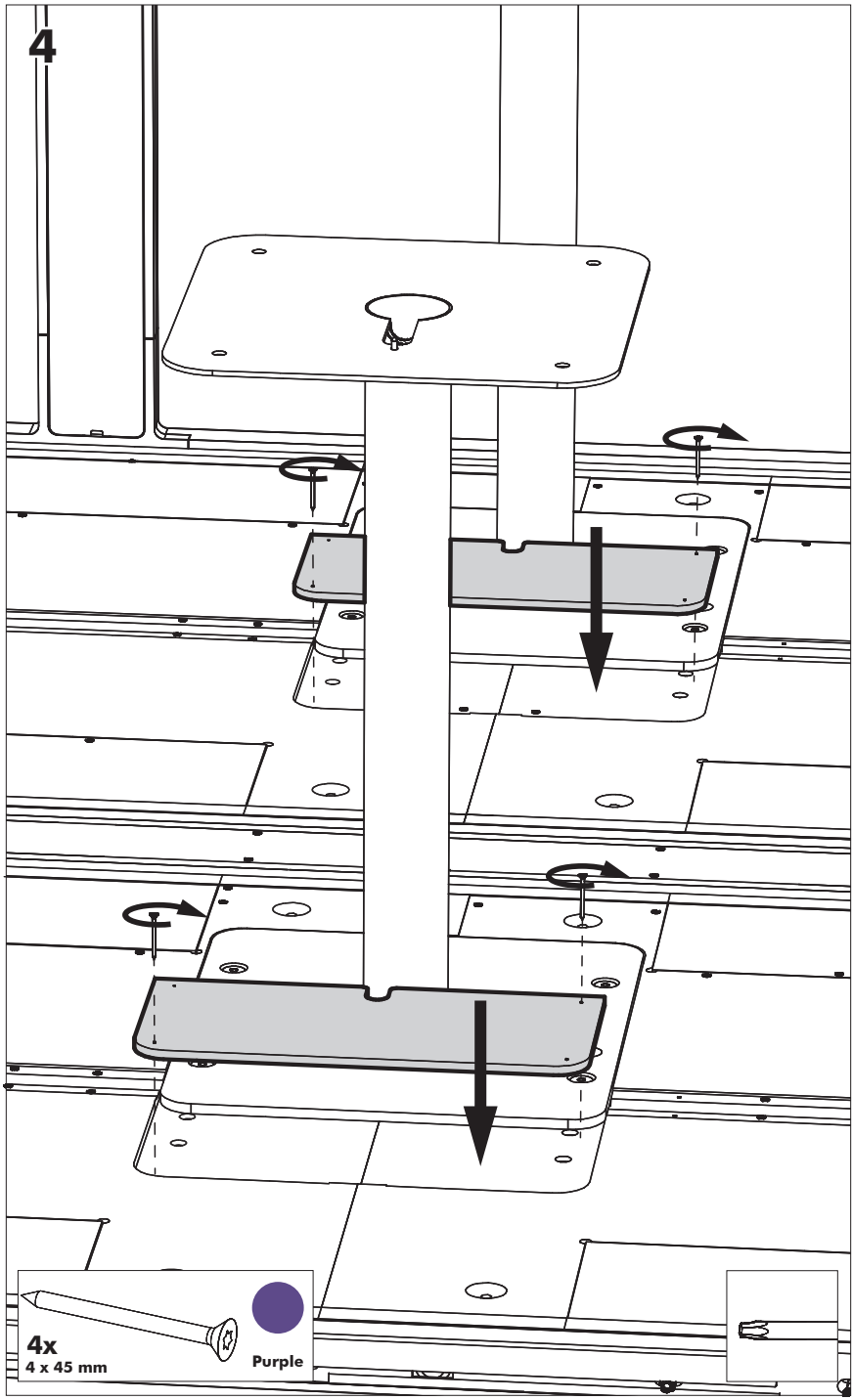
4
4x
4 x 45 mm
Purple

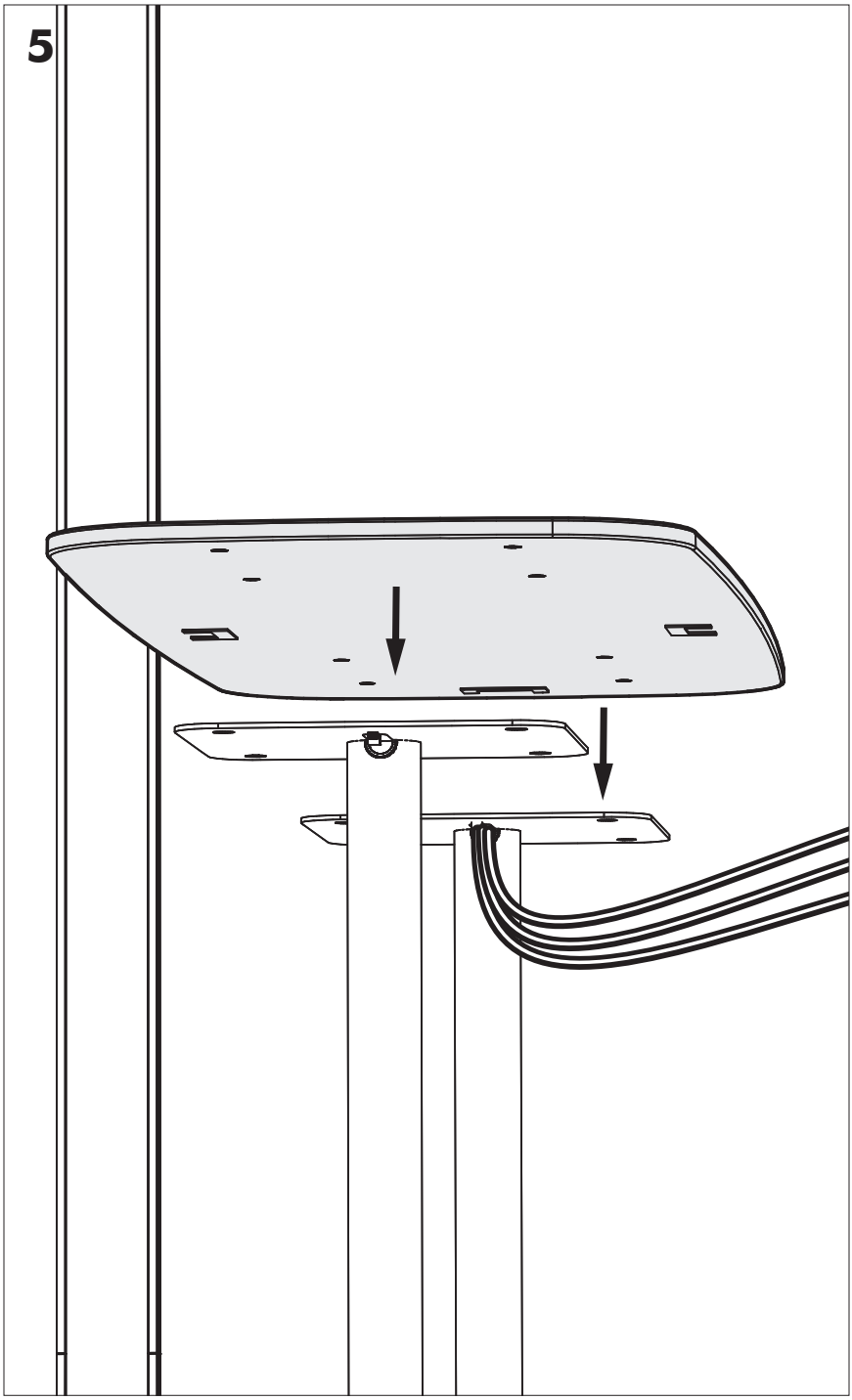
5

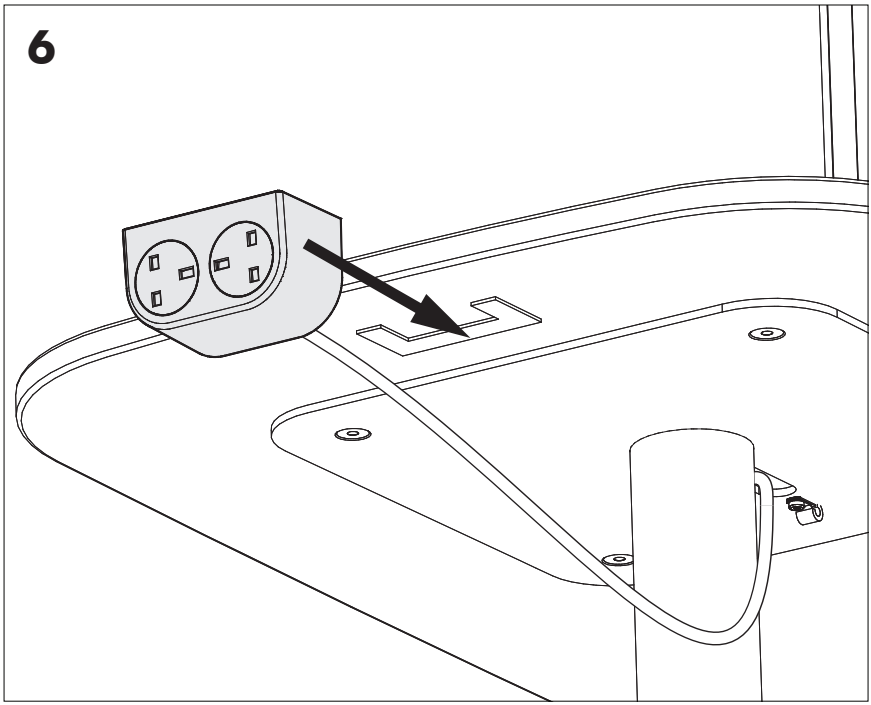
6

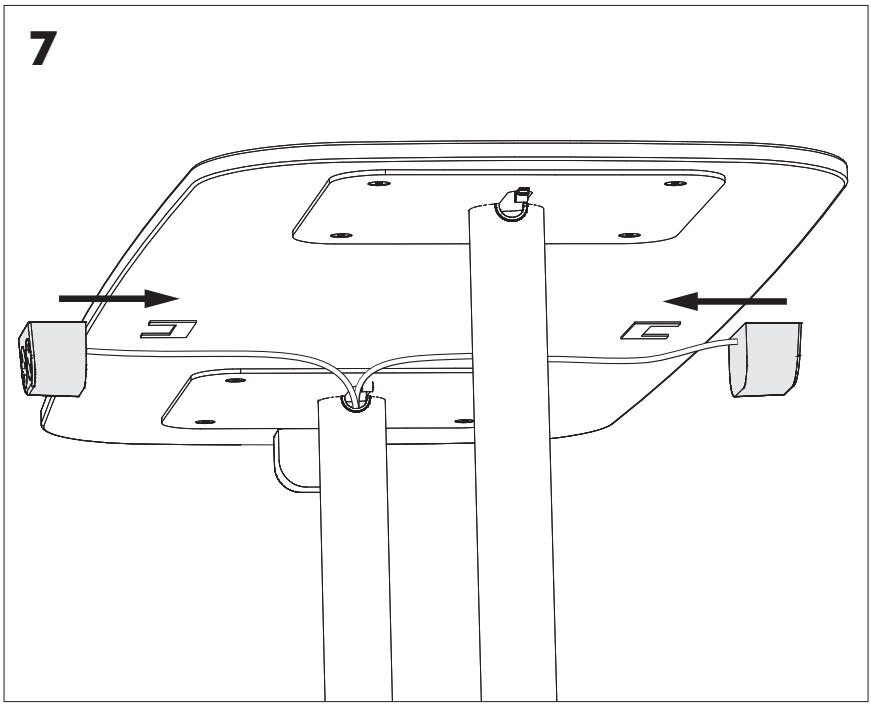
7

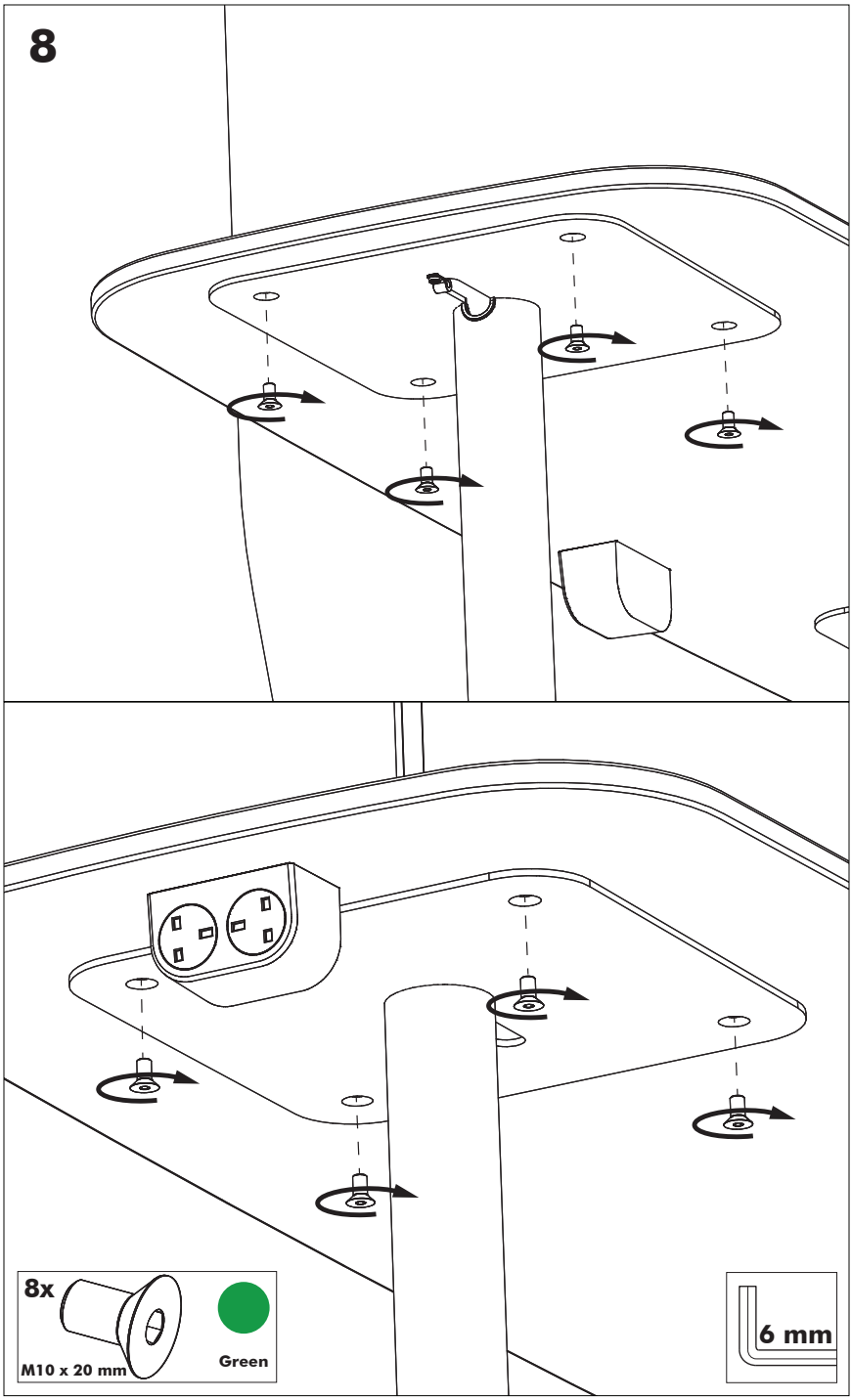
8
8x
M10 x 20 mm
Green
6 mm

# 9

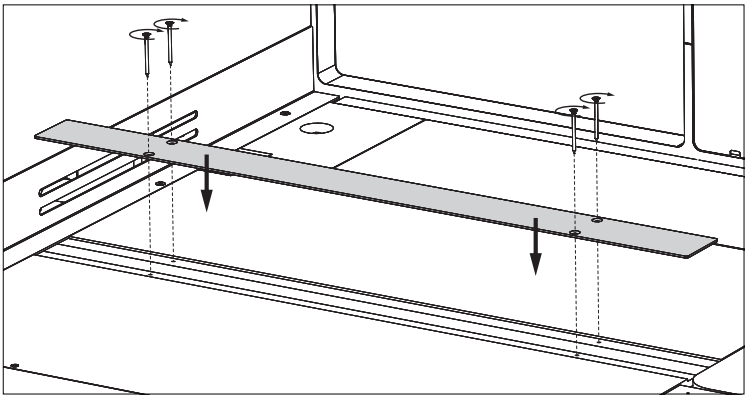

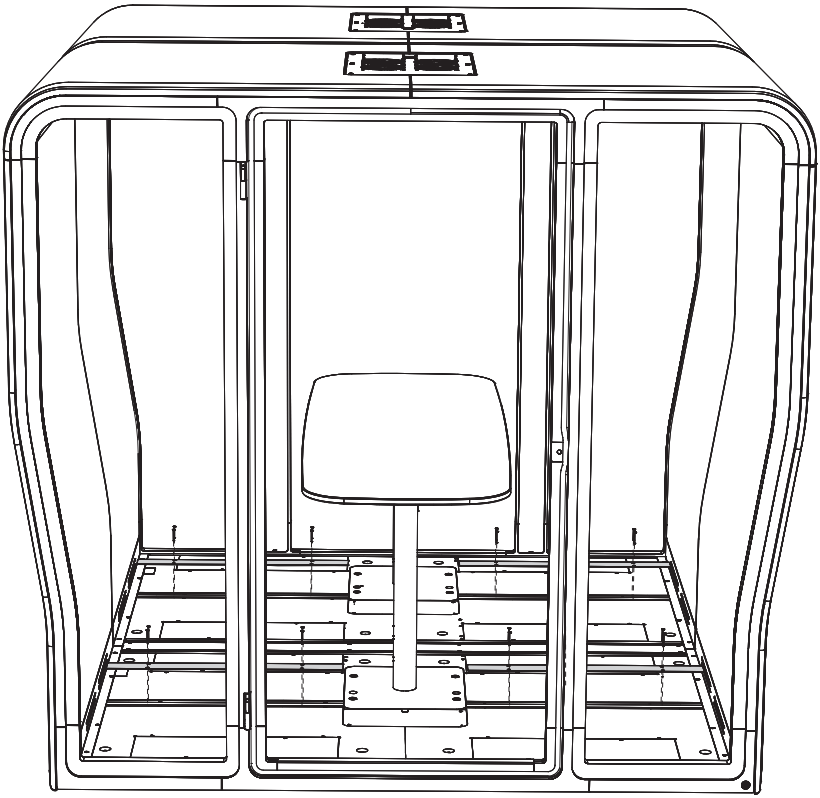

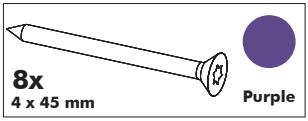


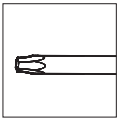

**10**

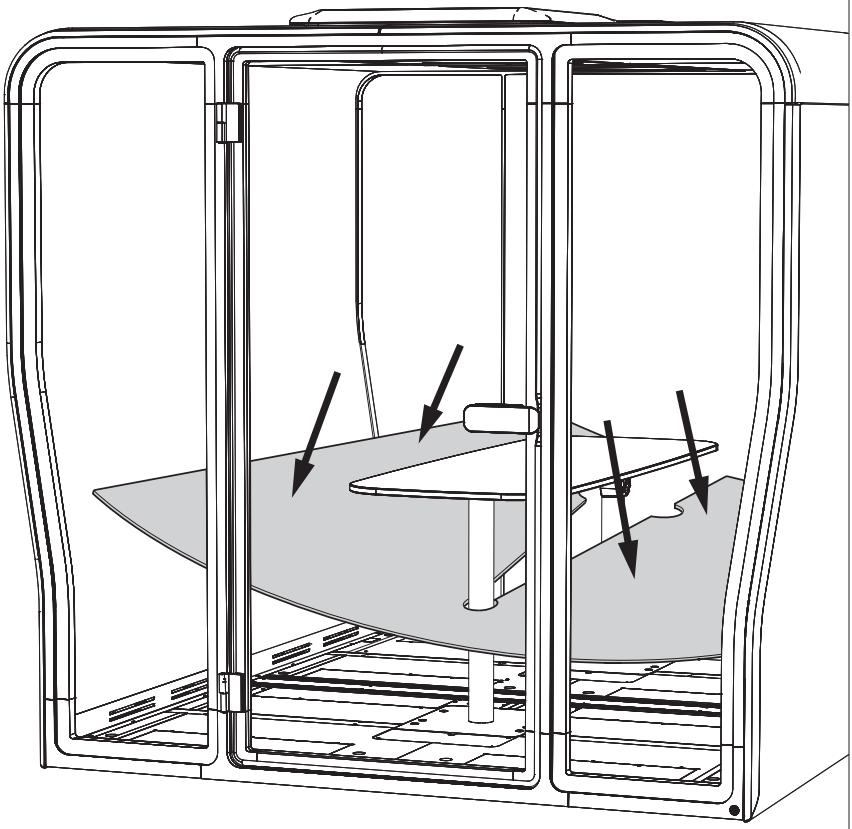

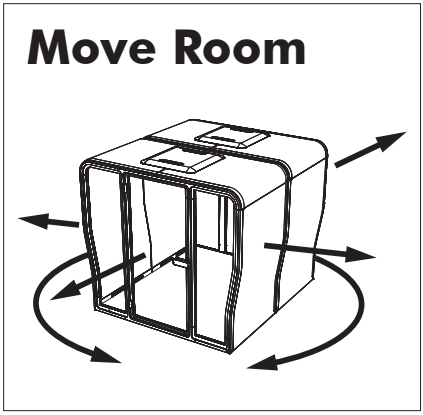
Move Room

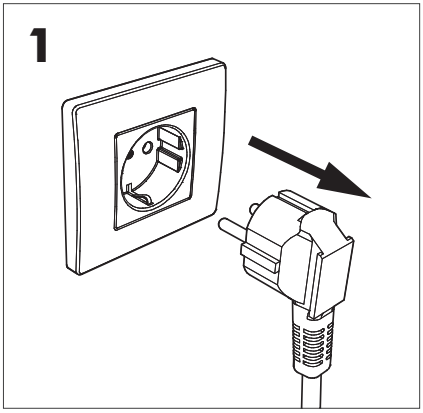
1

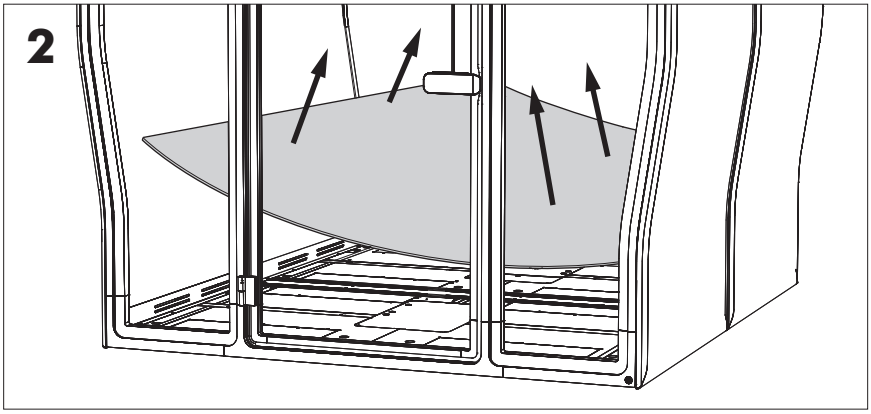
2

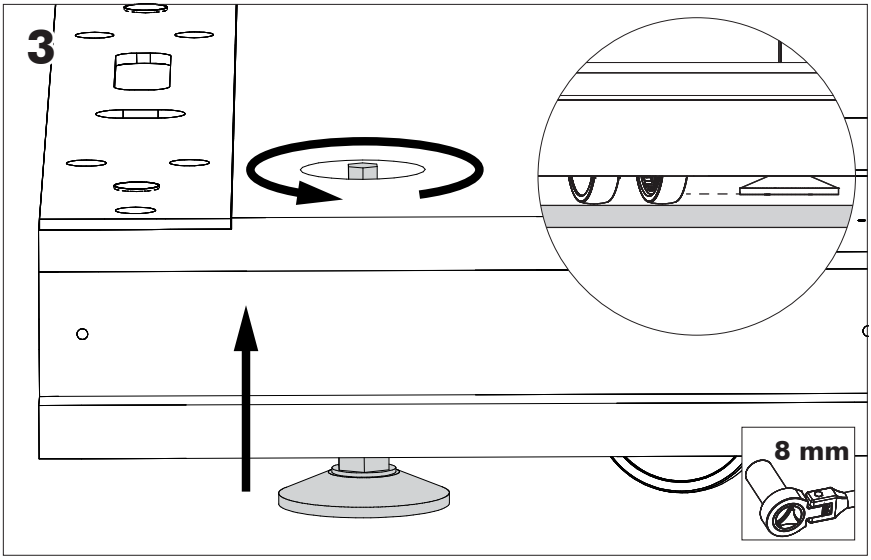
3
8 mm

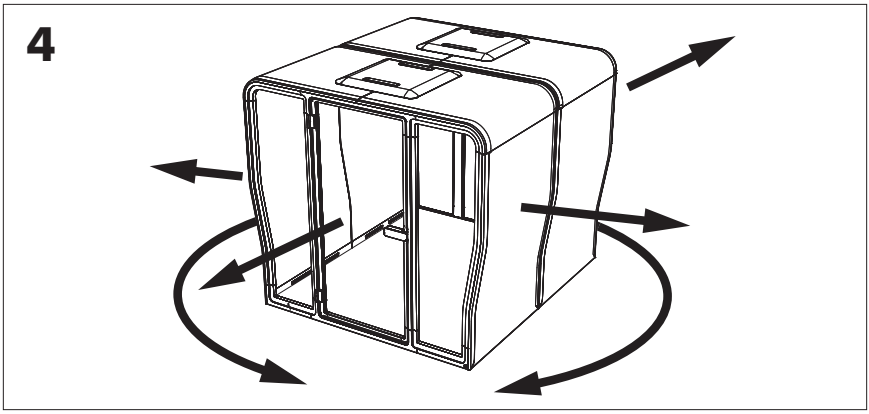
4

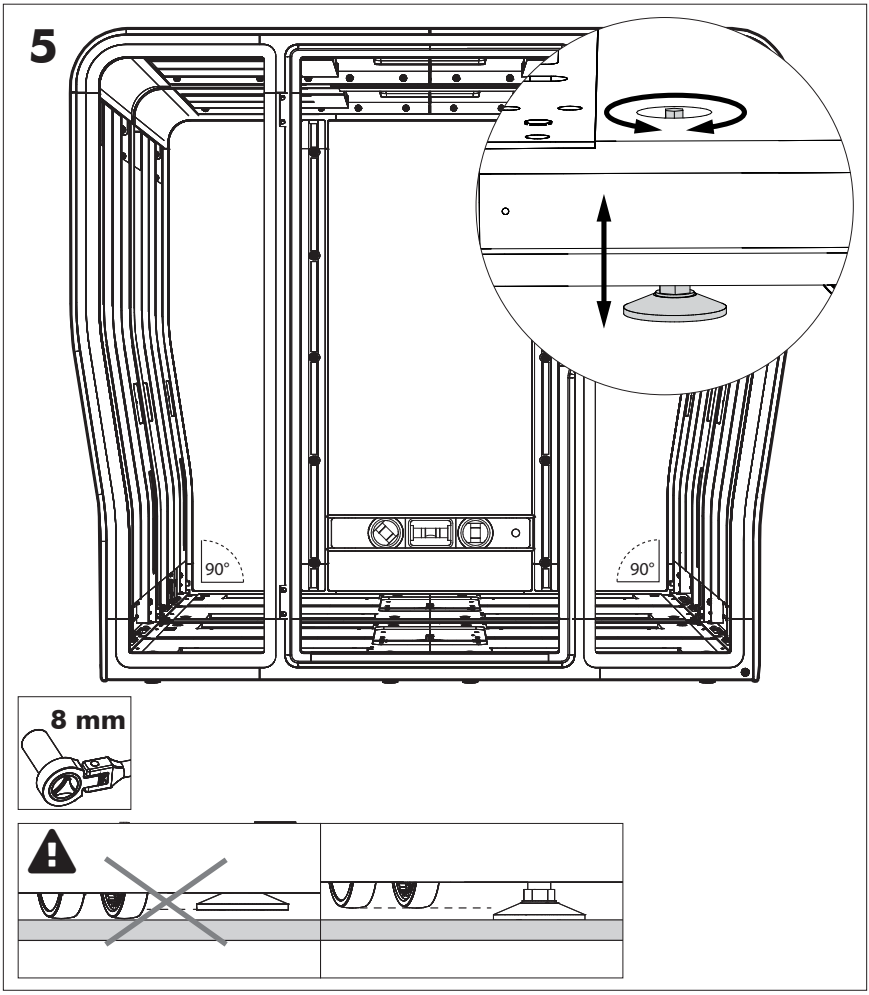
5
90°
90°
8 mm

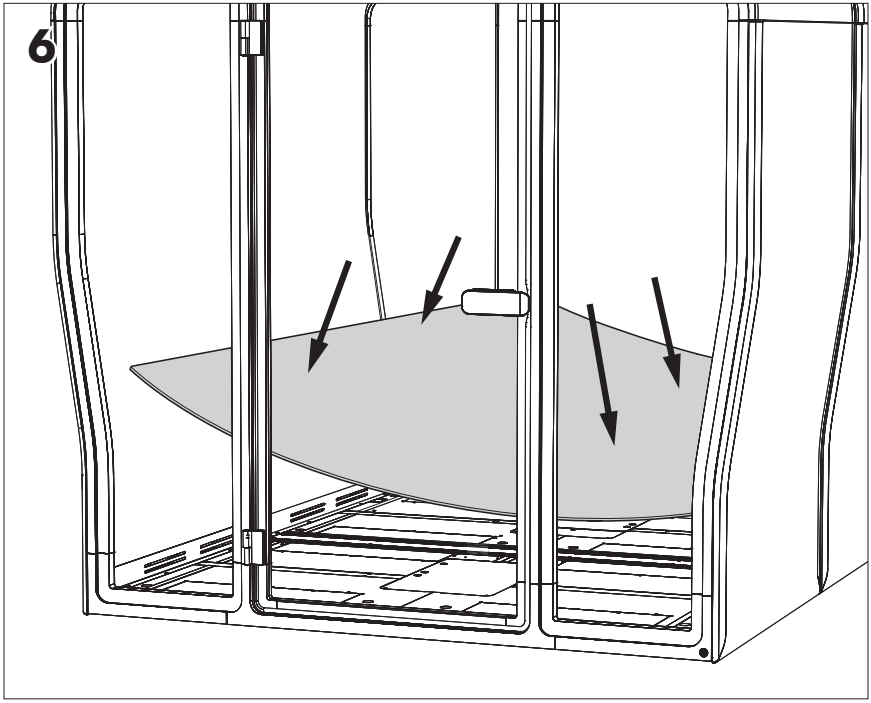
6

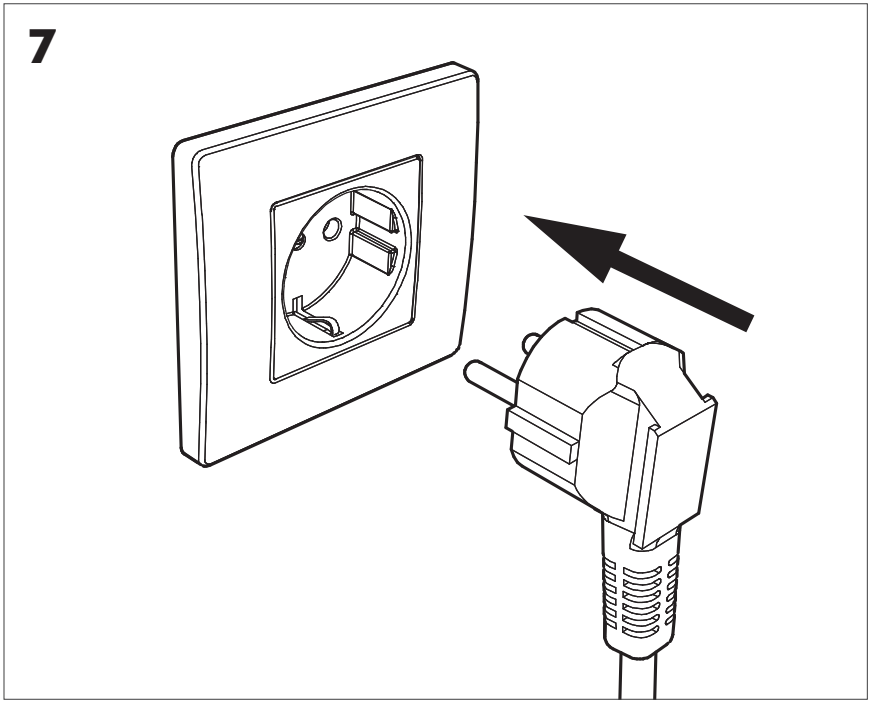
7

BuzziSpace Group NV
Italiëlei 8, 2000 Antwerp
Belgium
☎ +32 (0)3 846 10 00
info@buzzi.space
www.buzzi.space

Doc nr.: A-0000008129
Last update: 28/03/2025