Product Specification Sheet

BuzziVault Light EU

— By Alain Gilles

Circular by Nature. Lighting by Design.

Designed by Alain Gilles, BuzziVault Light is a high-performance acoustic lighting solution that combines mid-to-high frequency sound absorption with integrated indirect and direct architectural illumination. Designed for circularity and architectural impact, BuzziVault Light delivers lighting, acoustic comfort, and sculptural ceiling design in one cohesive suspended solution.

The Family

Model

BuzziVault Light

Lighting Unit
LED Line Flux 140

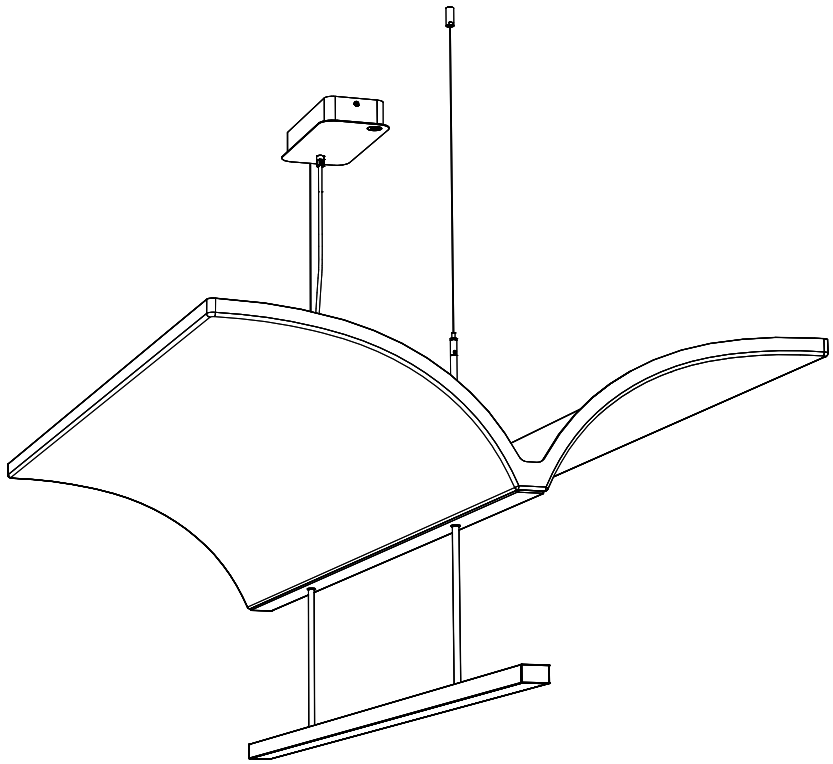

Required order information
1. Lighting Options (Voltage Input, Color Temperature, Dimming, Ceiling Canopy Color)
2. Mounting Option
3. PET Felt Color

Lighting Data

LED Line Flux 140

LED Line Flux 140 is a slim and elegant LED profile with a rectangular cross-section, designed to provide both direct (70%) and indirect (30%) illumination. The downlight delivers efficient functional lighting, while the uplight softly illuminates the ceiling and highlights the elegant curves of the acoustic panel above.
The fixture features a powder-coated black profile finished with polycarbonate milky diffusers. Its integrated light source consists of three LED strips tailored to the dimensions of LED Line Flux 140, ensuring excellent color consistency and smooth dimming performance. The result is a continuous, uniform light distribution without visible dotting.

BuzziVault Light Lighting options

Lighting Options				Characteristics		Mounting
Voltage Input	**Color Temperature**	**UGR (Diffuser type)**	**Dimming**	**Technical**	**Visual**	**Options**
220-240V	3000K 3500K 4000K	24	0-10V Dali-2	Power consumption: 45W Light output: 7275 Lm 30% Indirect 70% Direct Efficacy: 162 Lm/W CRI: > 90	Black or white ceiling canopy Transparent power cable	2 cables 2 m or 5 m in Alu or Black

CE

Photometric Data

LED Line Flux 140

Cartesian diagram

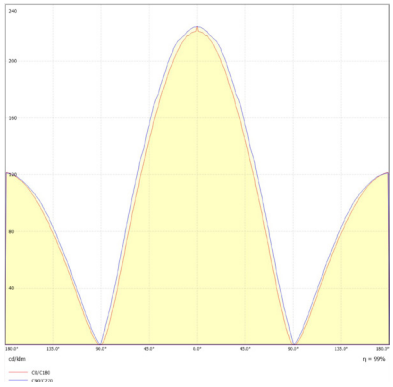

Polar curve

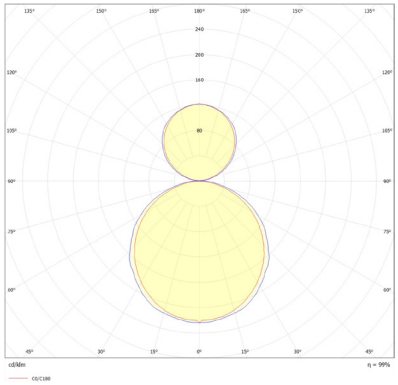

Tips and Tricks - Light Options

To enlight your workplace with optimal lux levels take following measurements into account:

BuzziVault Light

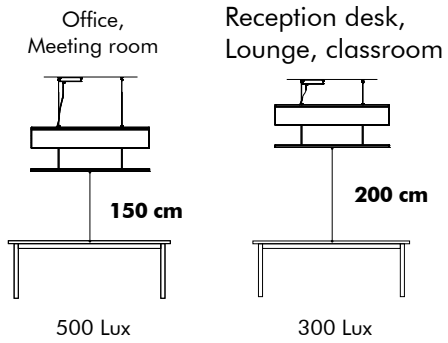

* According to EN12464

Product Data

Fixing System

Ceiling Suspended

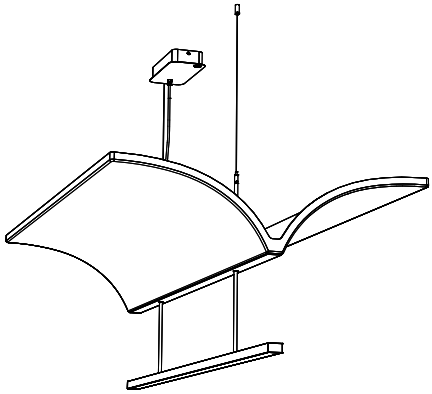

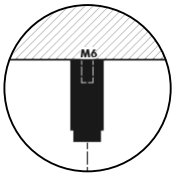

2 cables
2 m or 5 m
Black or Alu
Minimum distance of acoustic panel from ceiling is 10 cm

Black
Designer's choice

Alu

⚠ If installing on suspended ceiling, verify load capacity prior to installation.

Acoustic Panel

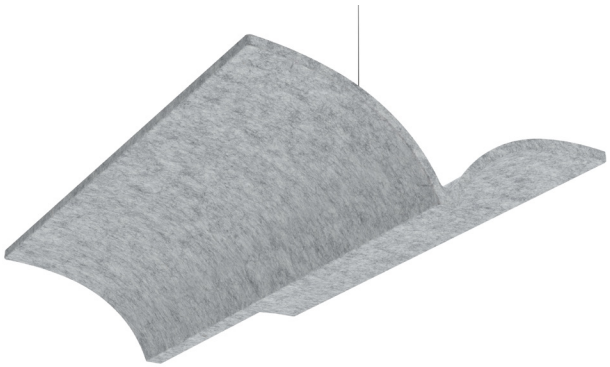

Acoustic panel in PET felt.

Absorption

Mid tone

High tone

Metal Frame

The metal frame is powder coated in black RAL 9005

The distance between the acoustic panel and LED Line Flux 140 is 25 cm.
This distance is fixed and can't be adjusted.

Canopy and power cable

Ceiling canopy is available in two finishes
powder-coated black (RAL 9005) or white (RAL 9010).

Power cable is transparent.

Dimensions

BuzziTent Light

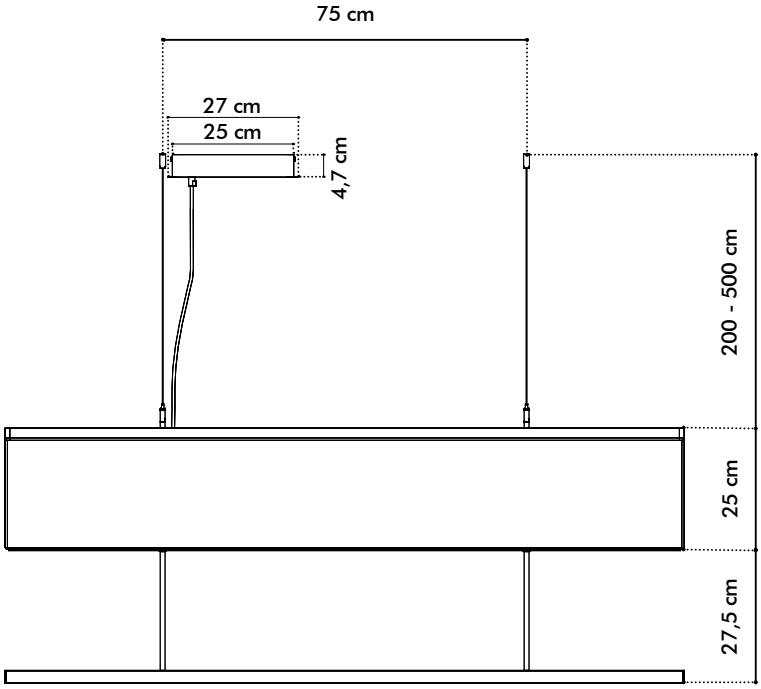

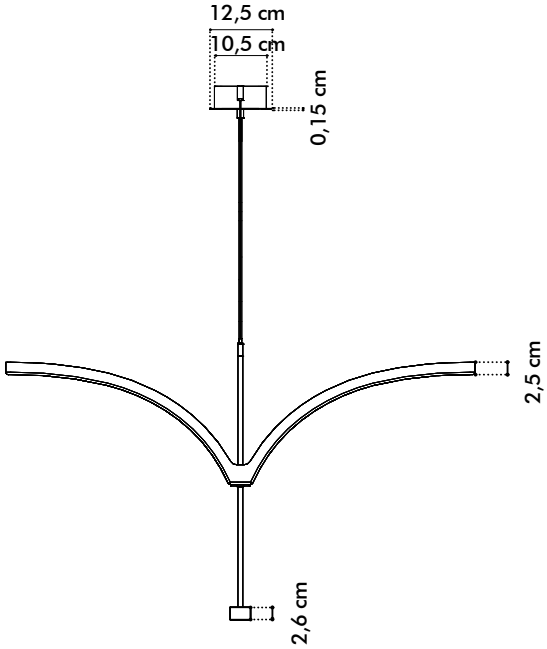

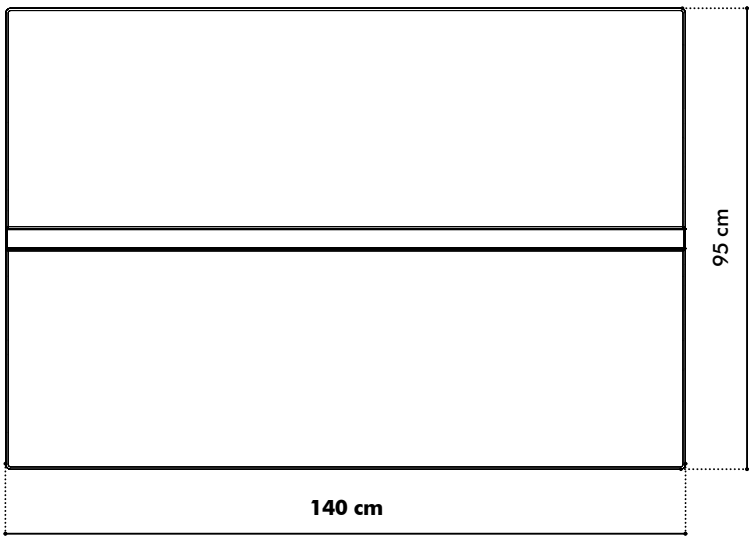

Weights

BuzziVault Light

10,25 kg

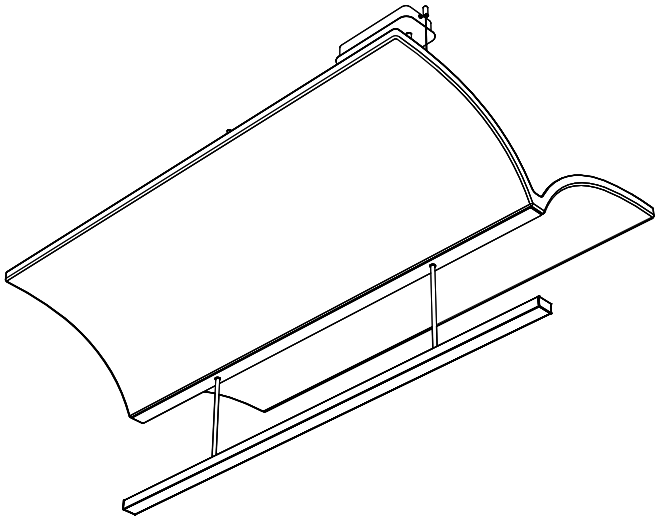

Fabrics

PET Felt

Composition 60% Recycled PET Felt
Weight 2.300 g/m2 I 67.8 oz/yd2
Thickness 7 mm I 0.28″
Maintenance For dust removal light vacuuming with a soft nozzle is recommended on a regular basis. For stain removal, patch test on a concealed section first. Spot clean according to the industry standards.

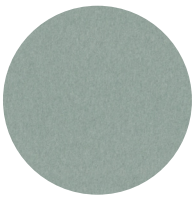
Sage 20

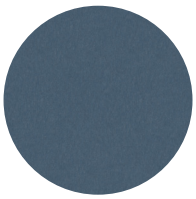
Slate 32

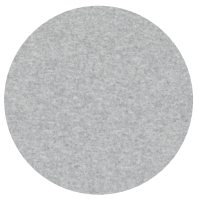
Frost 58

Cream 63

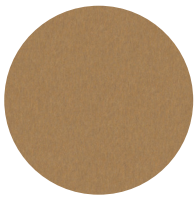
Ochre 65

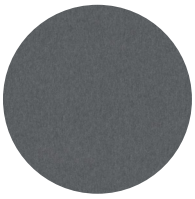
Smoke 71

Acoustics

BuzziVault Light

Equivalent sound absorption area in m² per object

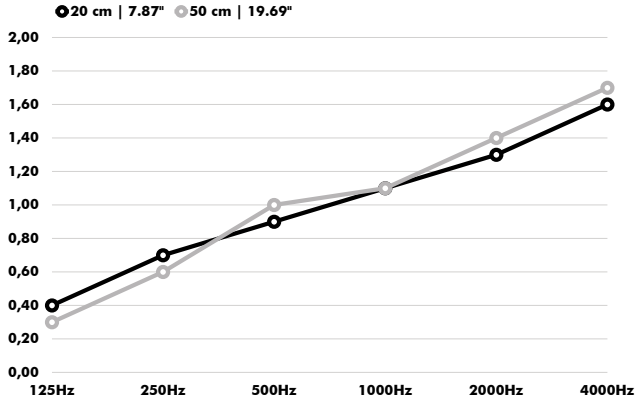

Hz	20 cm | 7.87" From Ceiling Aeq/m²	50 cm | 19.69" From Ceiling Aeq/m²
125	0.4	0.3
250	0.7	0.6
500	0.9	1.0
1000	1.1	1.1
2000	1.3	1.4
4000	1.6	1.7