BuzziWrap FrontDesk
Product Specification Sheet

This document contains technical information about the BuzziWrap FrontDesk

BUZZI SPACE

www.buzzi.space



A shield for uninterrupted focus
Focus areas are not limited to privacy booths and soundproof rooms. They come in many shapes and sizes. BuzziWrap FrontDesk is proof of that. With its large front, it converts a regular desk into a more private workstation, shielding out noise and distractions, to allow for uninterrupted focus, while concealing the cable cord clutter, which typically hangs off the rear of a desk. Easily attach it to almost any desk and choose among all the vibrant BuzziFelt colors to brighten up your workspace.

Design by BuzziSpace Studio

General

BuzziWrap FrontDesk

Cover: BuzziFelt
Core: honeycomb cardboard + poplar wood
Fix: powder coated metal black (RAL 9005) or white (RAL 9010)

Dry use

Flat Packed
Desk Mounted

Bicolor
Fix L, L Plus, XL, XXL

Certifications

Acoustics


Absorption


Diffusion


Attenuation


Mid tone


High tone

Content

Configurations	3
Fabrics	4
Composition	5
Dimensions	6
Acoustics	11

Configurations

BuzziWrap FrontDesk Full

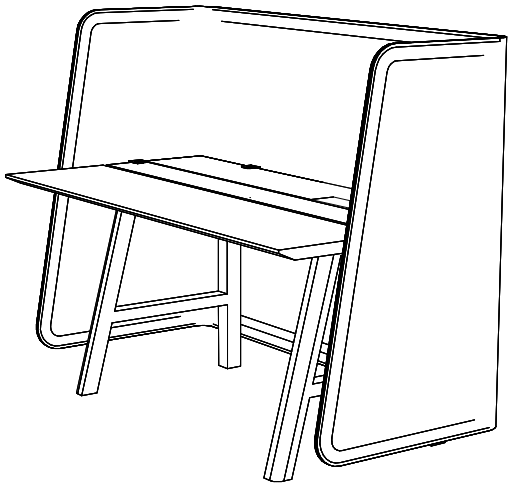

Cover: BuzziFelt
Core: honeycomb cardboard + poplar wood
Fix: powder coated metal black (RAL 9005) or white (RAL 9010)

L: Front: 100 cm ≤ 160 cm
39.37″ ≤ 62.99″
W: Side: 40 cm or 60 cm (measured at worktop level)
15.75″ or 23.62″
H: 100 cm, 110 cm or 120 cm
39.37″, 43.31″ or 47.24″
D: 3,5 cm
1.38″

Bicolor
Fix L, L Plus, XL, XXL

BuzziWrap FrontDesk Left

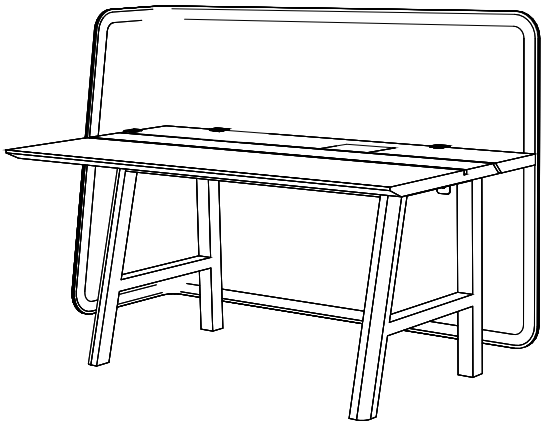

Cover: BuzziFelt
Core: honeycomb cardboard + poplar wood
Fix: powder coated metal black (RAL 9005) or white (RAL 9010)

L: Front: 100 cm ≤ 200 cm
39.37″ ≤ 78.74″
W: Side: 40 cm or 60 cm (measured at worktop level)
15.75″ or 23.62″
H: 100 cm, 110 cm or 120 cm
39.37″, 43.31″ or 47.24″
D: 3,5 cm
1.38″

Bicolor
Fix L, L Plus, XL, XXL

BuzziWrap FrontDesk Right

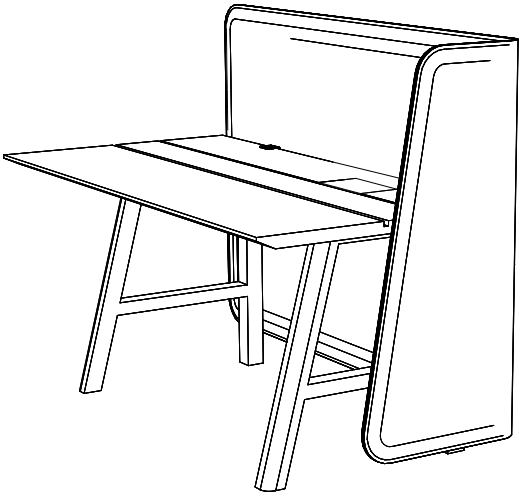

Cover: BuzziFelt
Core: honeycomb cardboard + poplar wood
Fix: powder coated metal black (RAL 9005) or white (RAL 9010)

L: Front: 100 cm ≤ 200 cm
39.37″ ≤ 78.74″
W: Side: 40 cm or 60 cm (measured at worktop level)
15.75″ or 23.62″
H: 100 cm, 110 cm or 120 cm
39.37″, 43.31″ or 47.24″
D: 3,5 cm
1.38″

Bicolor
Fix L, L Plus, XL, XXL

Fabrics

Felt (15 colors)

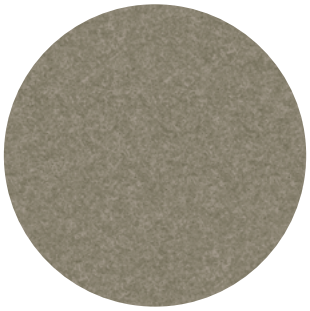

Composition 100% Recycled P.E.T. Felt, latex backing
Weight 1.000 g/m2 | 29.49 oz/yd2
Abrasion resistance >7.000 Martindale
Flammability EU: EN 13501.1 + A1/2009 Class B-s1,d0
USA: ASTM E84 Class A certified
Bottle, Mustard, Mint, Nude: USA: ASTM E85 Class C Certified
Fastness to light USA 5

Composition

Mounting positions

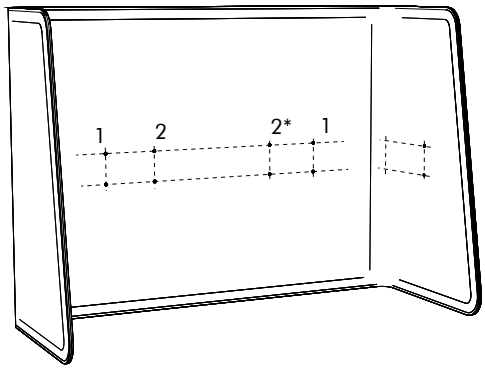

There are two different fix mounting positions provided on the front side to accommodate your worktop.
* not for size XS

Fix

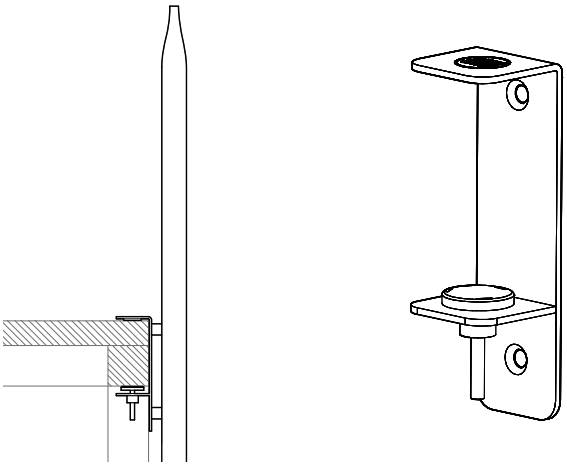

BuzziFix is available in powder coated metal Black (RAL 9005) or White (RAL 9010)
Desk Full: 4 Fixes
Desk Left | Right: 3 Fixes

L: Worktop: 12 > 27 mm
0.47″ > 1.06″
L Plus: Worktop: 18 > 43 mm
0.71″ > 1.69″
XL: Worktop: 28 > 57 mm
1.10″ > 2.24″
XXL: Worktop: 72 mm > 98 mm
2.83″ > 3.86″
(XXL applicable for PicNic desk front side)

Distance holder



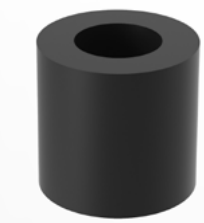

Additional distance holders are included and can be mounted at the front side to provide space for electrical cables etc.
(L 1,5 cm Ø 1,5 | L 0.59″ Ø 0.59″)

Dimensions

BuzziWrap FrontDesk Full

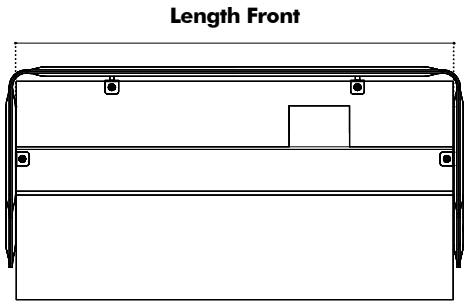

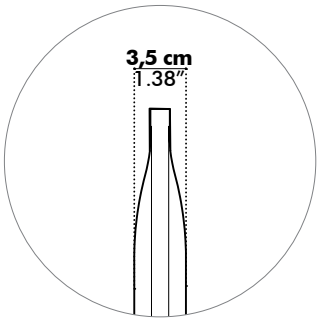

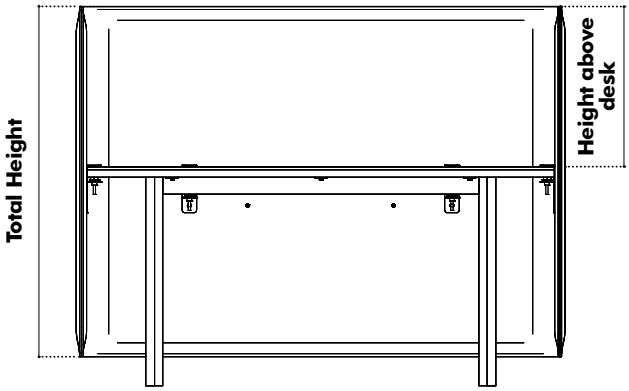

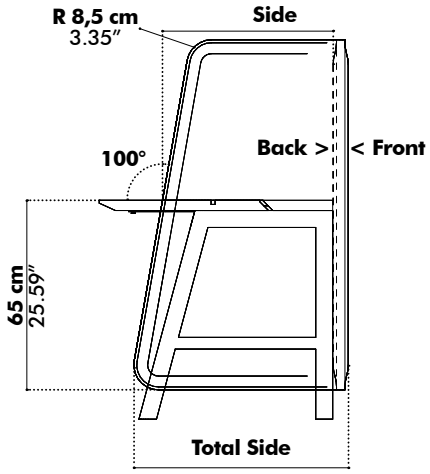

Height above desk Total height	**Side** Total Side	**Length Front XS** ≤ 120 cm	**Length Front S** ≤ 140 cm	**Length Front M** ≤ 160 cm
35 cm | 100 cm	**40 cm** | 53,5 cm	8.8kg	9.8kg	10.7kg
	60 cm | 70 cm	10.7kg	11.7kg	12.7kg
45 cm | 110 cm	**40 cm** | 53,5 cm	9.4kg	10.4kg	11.5kg
	60 cm | 70 cm	11.5kg	12.5kg	13.5kg
55 cm | 120 cm	**40 cm** | 53,5 cm	10kg	11.1kg	12.2kg
	60 cm | 70 cm	12.2kg	13.2kg	14.3kg

Height above desk Total height	**Side** Total Side	**Length Front XS** ≤ 47.24″	**Length Front S** ≤ 55.12″	**Length Front M** ≤ 62.99″
13.78″ | 39.37″	**15.75″** | 21.06″	lbs	lbs	lbs
	23.62″ | 27.56″	lbs	lbs	lbs
17.72″ | 43.31″	**15.75″** | 21.06″	lbs	lbs	lbs
	23.62″ | 27.56″	lbs	lbs	lbs
21.65″ | 47.24″	**15.75″** | 21.06″	lbs	lbs	lbs
	23.62″ | 27.56″	lbs	lbs	lbs

BuzziWrap FrontDesk Left

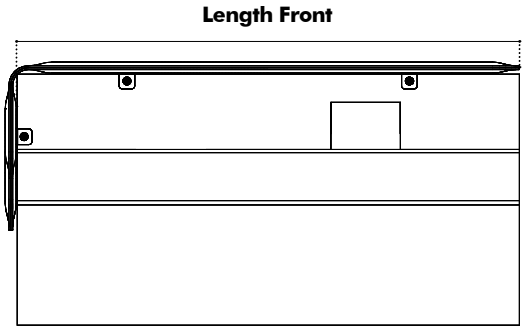

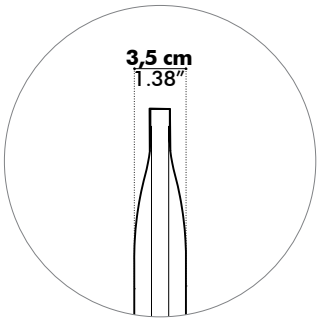

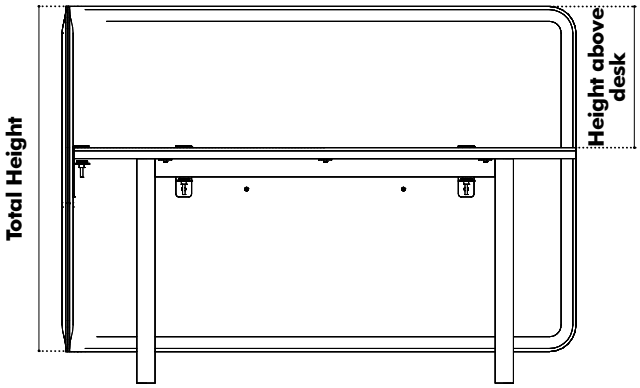

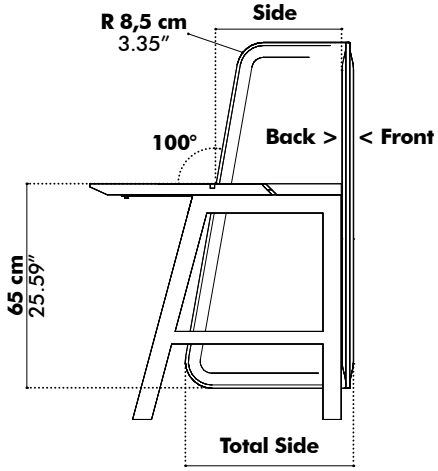

Height above desk Total height	Side Total Side	Length Front XS ≤ 120 cm	Length Front S ≤ 140 cm	Length Front M ≤ 160 cm	Length Front L ≤ 180 cm	Length Front XL ≤ 200 cm
35 cm | 100 cm	**40 cm** | 53,5 cm	7,4 kg	8,4 kg	9,3 kg	10,3 kg	11,2 kg
	60 cm | 70 cm	8,4 kg	9,3 kg	10,3 kg	11,2 kg	12,2 kg
45 cm | 110 cm	**40 cm** | 53,5 cm	7,9 kg	8,9 kg	10 kg	11 kg	12 kg
	60 cm | 70 cm	8,9 kg	10 kg	11 kg	12 kg	13 kg
55 cm | 120 cm	**40 cm** | 53,5 cm	8,4 kg	9,5 kg	10,6 kg	11,7 kg	12,8 kg
	60 cm | 70 cm	9,5 kg	10,6 kg	11,7 kg	12,8 kg	13,9 kg

Height above desk Total height	Side Total Side	Length Front XS ≤ 47.24″	Length Front S ≤ 55.12″	Length Front M ≤ 62.99″	Length Front L ≤ 70.87″	Length Front XL ≤ 78.74″
13.78″ | 39.37″	**15.75″** | 21.06″	16.31 lbs	18.52 lbs	20.50 lbs	22.71 lbs	24.69 lbs
	23.62″ | 27.56″	18.52 lbs	20.50 lbs	22.71 lbs	24.69 lbs	26.90 lbs
17.72″ | 43.31″	**15.75″** | 21.06″	17.42 lbs	19.62 lbs	22.05 lbs	24.25 lbs	26.46 lbs
	23.62″ | 27.56″	19.62 lbs	22.05 lbs	24.25 lbs	26.46 lbs	28.66 lbs
21.65″ | 47.24″	**15.75″** | 21.06″	18.52 lbs	20.94 lbs	23.37 lbs	25.79 lbs	28.22 lbs
	23.62″ | 27.56″	20.94 lbs	23.37lbs	25.79 lbs	28.22 lbs	30.64 lbs

BuzziWrap FrontDesk Right

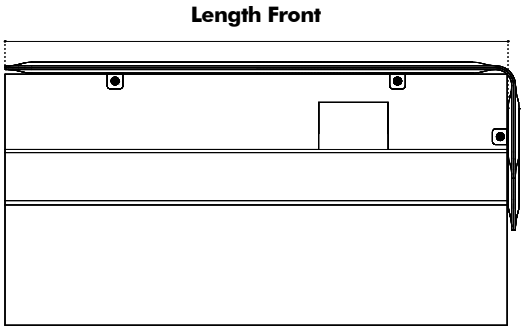

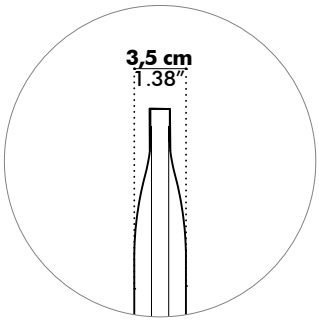

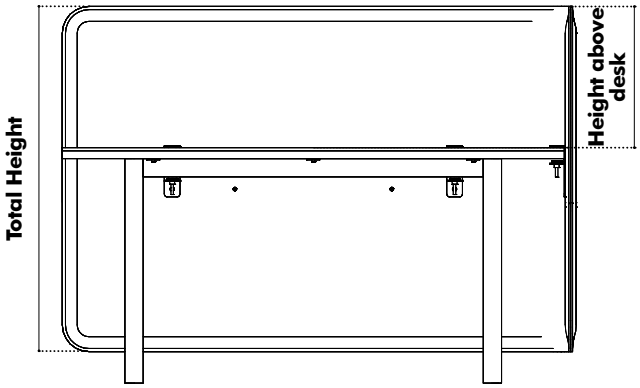

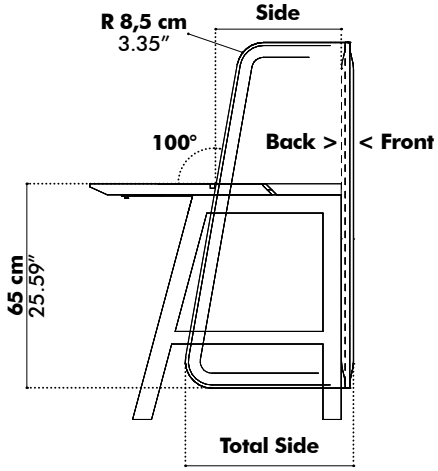

Height above desk Total height	Side Total Side	Length Front XS ≤ 120 cm	Length Front S ≤ 140 cm	Length Front M ≤ 160 cm	Length Front L ≤ 180 cm	Length Front XL ≤ 200 cm
35 cm | 100 cm	**40 cm** | 53,5 cm	7,4 kg	8,4 kg	9,3 kg	10,3 kg	11,2 kg
	60 cm | 70 cm	8,4 kg	9,3 kg	10,3 kg	11,2 kg	12,2 kg
45 cm | 110 cm	**40 cm** | 53,5 cm	7,9 kg	8,9 kg	10 kg	11 kg	12 kg
	60 cm | 70 cm	8,9 kg	10 kg	11 kg	12 kg	13 kg
55 cm | 120 cm	**40 cm** | 53,5 cm	8,4 kg	9,5 kg	10,6 kg	11,7 kg	12,8 kg
	60 cm | 70 cm	9,5 kg	10,6 kg	11,7 kg	12,8 kg	13,9 kg

Height above desk Total height	Side Total Side	Length Front XS ≤ 47.24″	Length Front S ≤ 55.12″	Length Front M ≤ 62.99″	Length Front L ≤ 70.87″	Length Front XL ≤ 78.74″
13.78″ | 39.37″	**15.75″** | 21.06″	16.31 lbs	18.52 lbs	20.50 lbs	22.71 lbs	24.69 lbs
	23.62″ | 27.56″	18.52 lbs	20.50 lbs	22.71 lbs	24.69 lbs	26.90 lbs
17.72″ | 43.31″	**15.75″** | 21.06″	17.42 lbs	19.62 lbs	22.05 lbs	24.25 lbs	26.46 lbs
	23.62″ | 27.56″	19.62 lbs	22.05 lbs	24.25 lbs	26.46 lbs	28.66 lbs
21.65″ | 47.24″	**15.75″** | 21.06″	18.52 lbs	20.94 lbs	23.37 lbs	25.79 lbs	28.22 lbs
	23.62″ | 27.56″	20.94 lbs	23.37lbs	25.79 lbs	28.22 lbs	30.64 lbs

Mounting positions XS

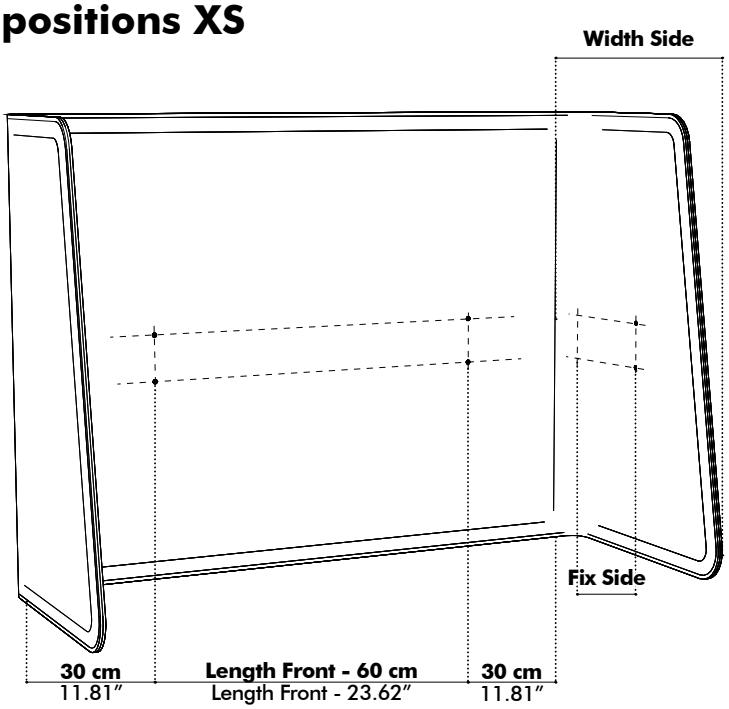

Side	**40 cm** | 15.75″	**60 cm** | 23.62″
Width Side	**20 cm** | 7.87″	**30 cm** | 11.81″

Mounting positions S | M | L | XL

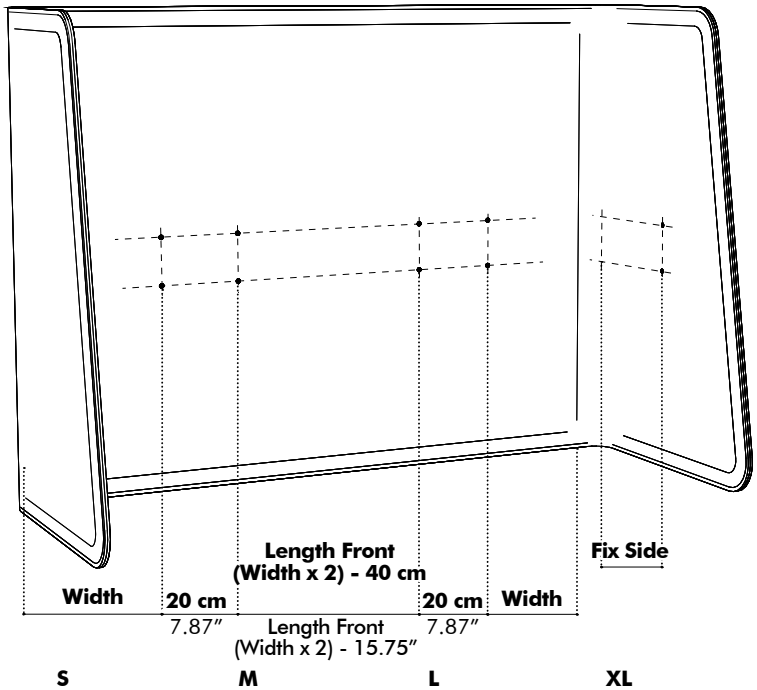

	S	M	L	XL
Width	**30 cm** | 11.81″	**35 cm** | 13.78″	**35 cm** | 13.78″	**35 cm** | 13.78″

Side	**40 cm** | 15.75″	**60 cm** | 23.62″
Width Side	**20 cm** | 7.87″	**30 cm** | 11.81″

Tabletop Fix Requirement

Mounting positions XS

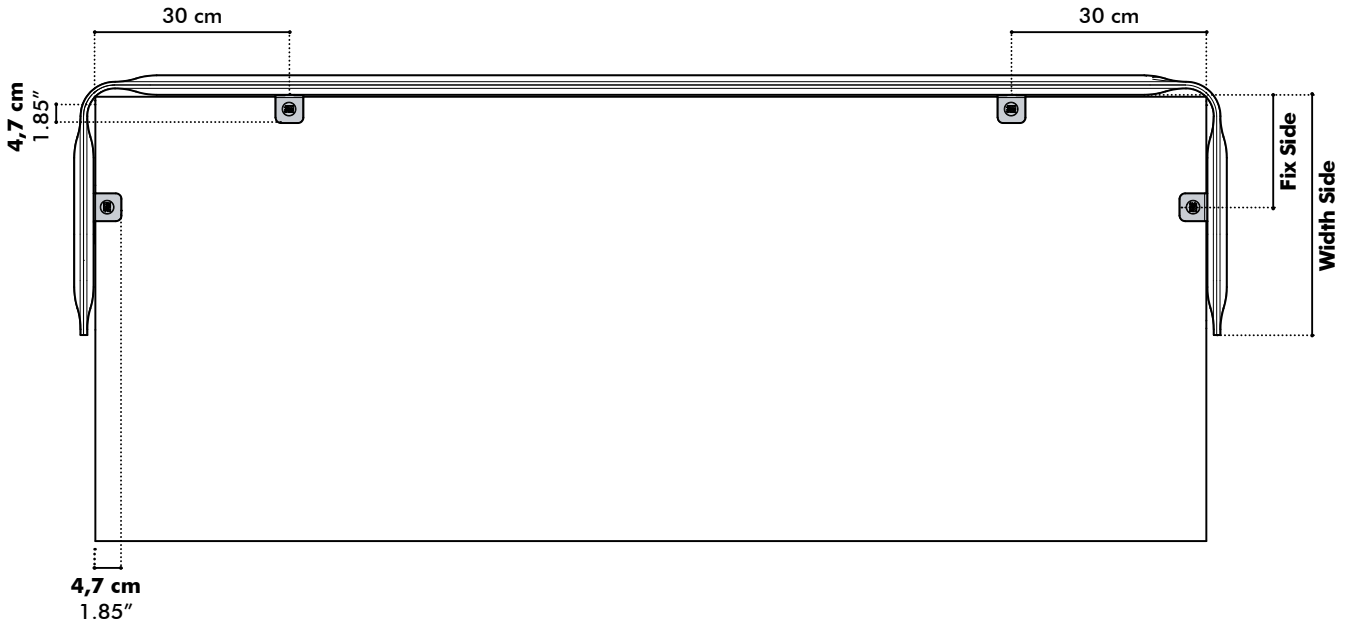

Width Side	**40 cm** | 15.75″	**60 cm** | 23.62″
Fix Side	**20 cm** | 7.87″	**30 cm** | 11.81″

Mounting positions S | M | L | XL

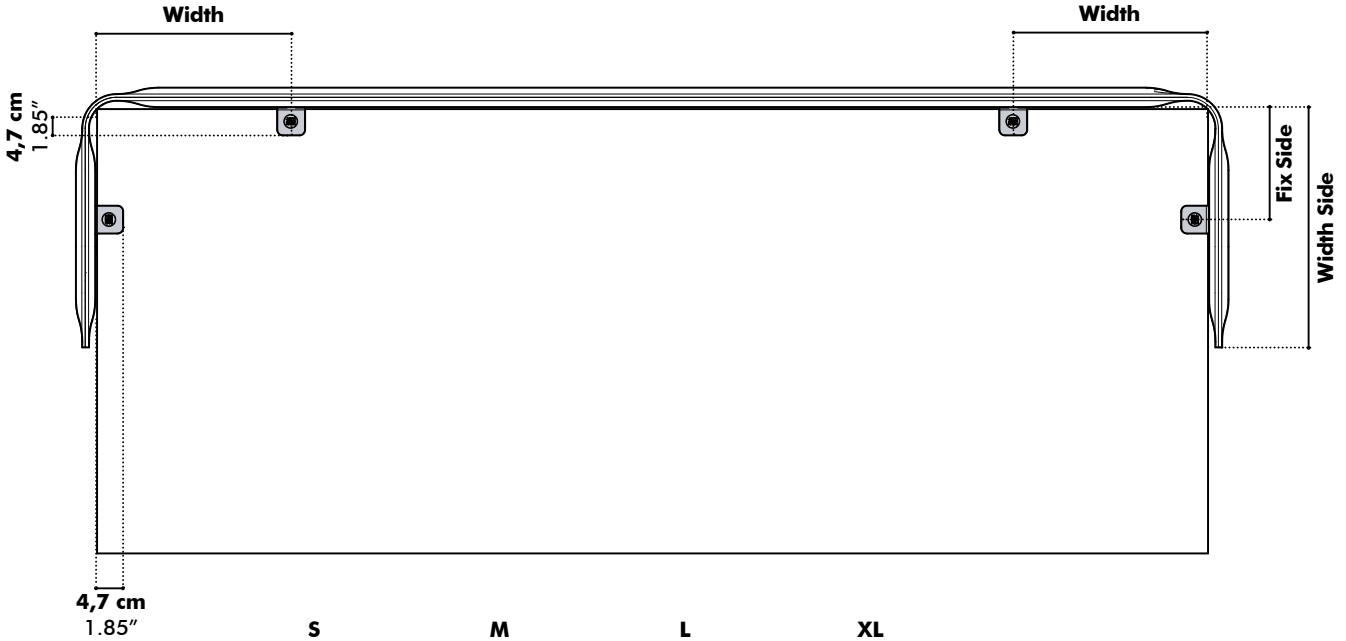

	S	M	L	XL
Width	**30 cm** | 11.81″	**35 cm** | 13.78″	**35 cm** | 13.78″	**35 cm** | 13.78″

Width Side	**40 cm** | 15.75″	**60 cm** | 23.62″
Fix Side	**20 cm** | 7.87″	**30 cm** | 11.81″

Fixes

Attention: the worktop thickness might differ on the sides and the front of the desk. Please specify the proper sizes of the fixes for each side of the worktop.

Fix L

Worktop: 12 > 27 mm | 0.47″ > 1.06″

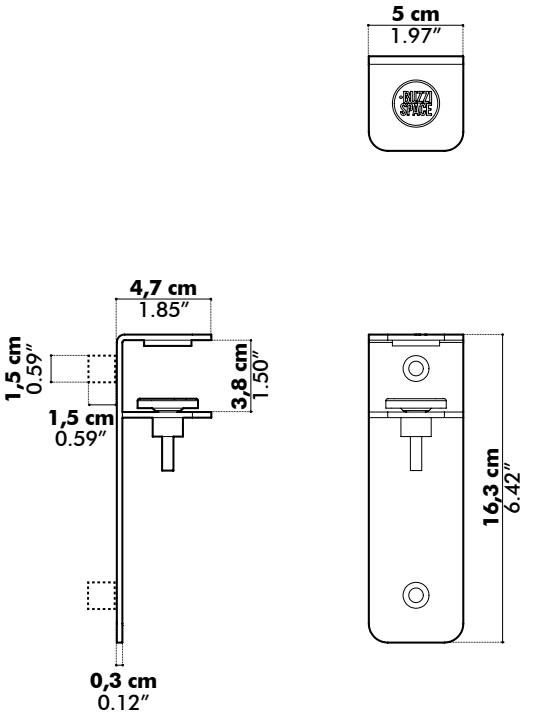

Fix L Plus

Worktop: 18 > 43 mm | 0.71″ > 1.69″

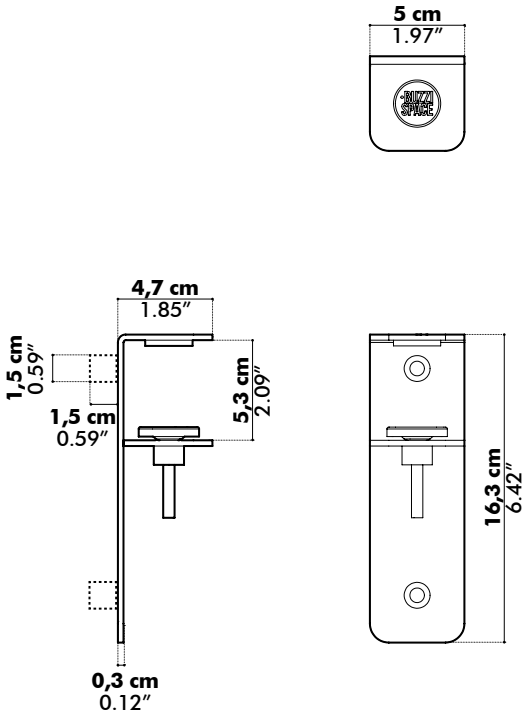

Fix XL

Worktop: 28 > 57 mm | 1.10″ > 2.24″

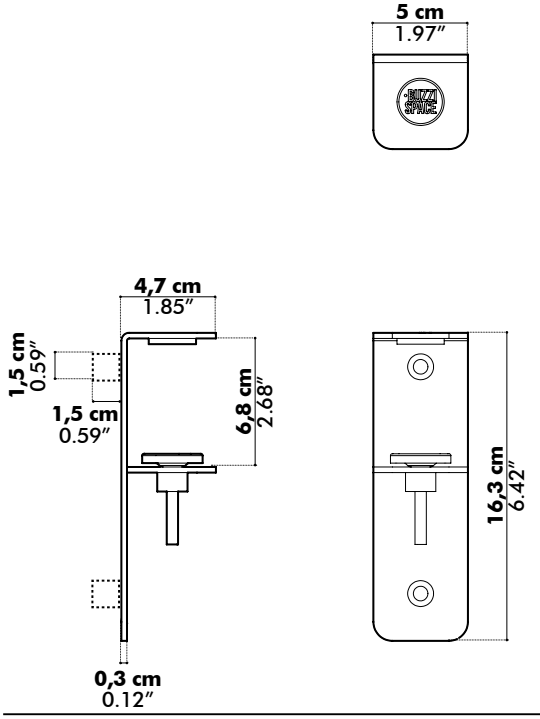

Fix XXL

Worktop: 72 mm > 98 mm | 2.83″ > 3.86″

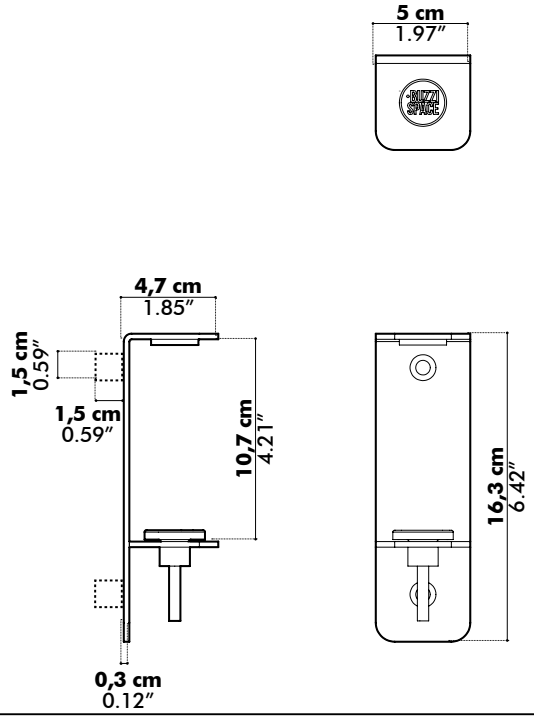

Acoustics

BuzziWrap FrontDesk

Equivalent sound absorption area in m² per object

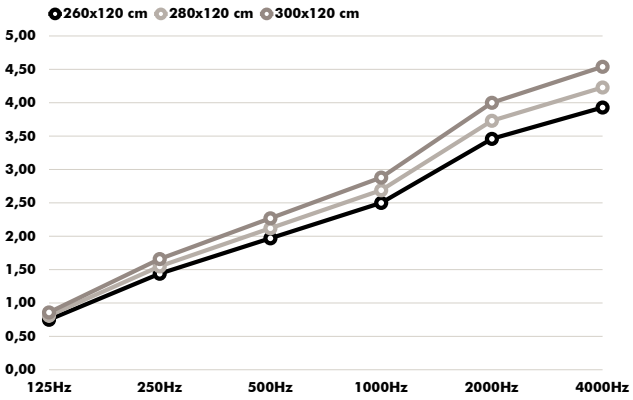

Hz	260x120 cm Aeq/m²	280x120 cm Aeq/m²	300x120 cm Aeq/m²
125	0.75	0.81	0.86
250	1.44	1.55	1.66
500	1.97	2.12	2.27
1000	2.50	2.69	2.88
2000	3.46	3.73	4
4000	3.93	4.23	4.54