BuzziDesk Split
Product Specification Sheet

This document contains technical information about the BuzziDesk Split

BUZZI SPACE

www.buzzi.space



Desk divider screen for more privacy
Are you sitting at one big table next to different colleagues? With the BuzziDesk Split you can gain more privacy by creating a personal and quiet workspace. Just slide the sound absorbing BuzziDesk Split over the table and say goodbye to irritating sounds or elbow fights!

Design by BuzziSpace Studio

General

Small, Medium, Large

Core: honeycomb cardboard
Cover: BuzziFelt
Profile: metal

Bicolor

Certifications

Acoustics


Absorption


Diffusion


Attenuation


Mid tone


High tone

Content

Finishes	3
Fabrics	3
Fixing system	4
Dimensions	5
Acoustics	7

Finishes

Round or straight edges

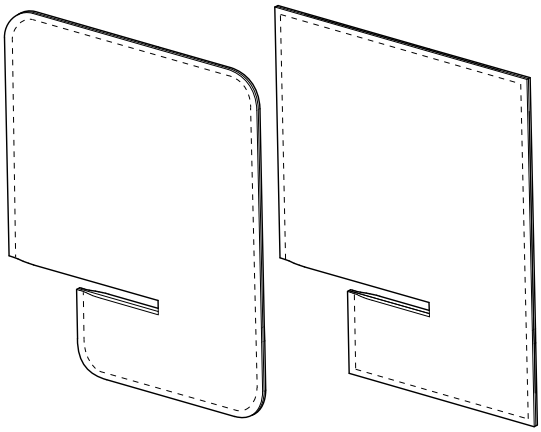

- Round or straight edges
- Stitch only on Felt

Unicolor | Multicolor

Unicolor = Same color left and right side
Bicolor = Different color left and right side

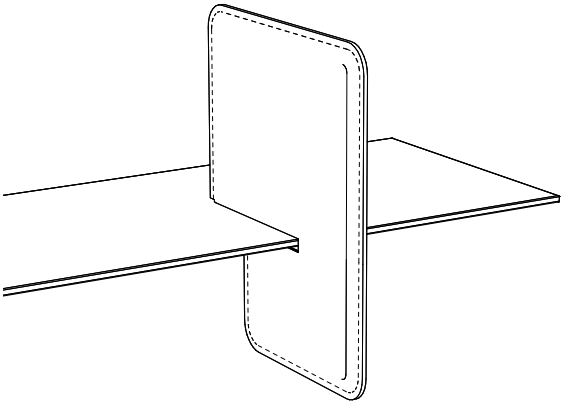

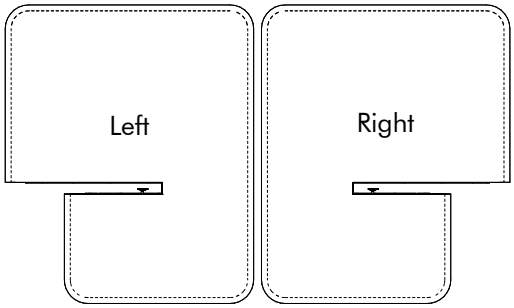

Fabrics

Felt (15 Colors)

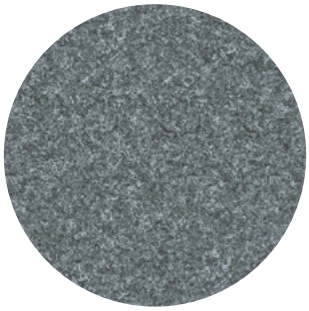

Composition 100% Recycled P.E.T. Felt, latex backing
Weight 1.000 g/m2 | 29.49 oz/yd2
Abrasion resistance >7.000 Martindale
Flammability EU: EN 13501.1 + A1/2009 Class B-s1,d0
USA: ASTM E84 Class A certified
Bottle, Mustard, Mint, Nude: USA: ASTM E85 Class C Certified
Fastness to light USA 5

Fixing system

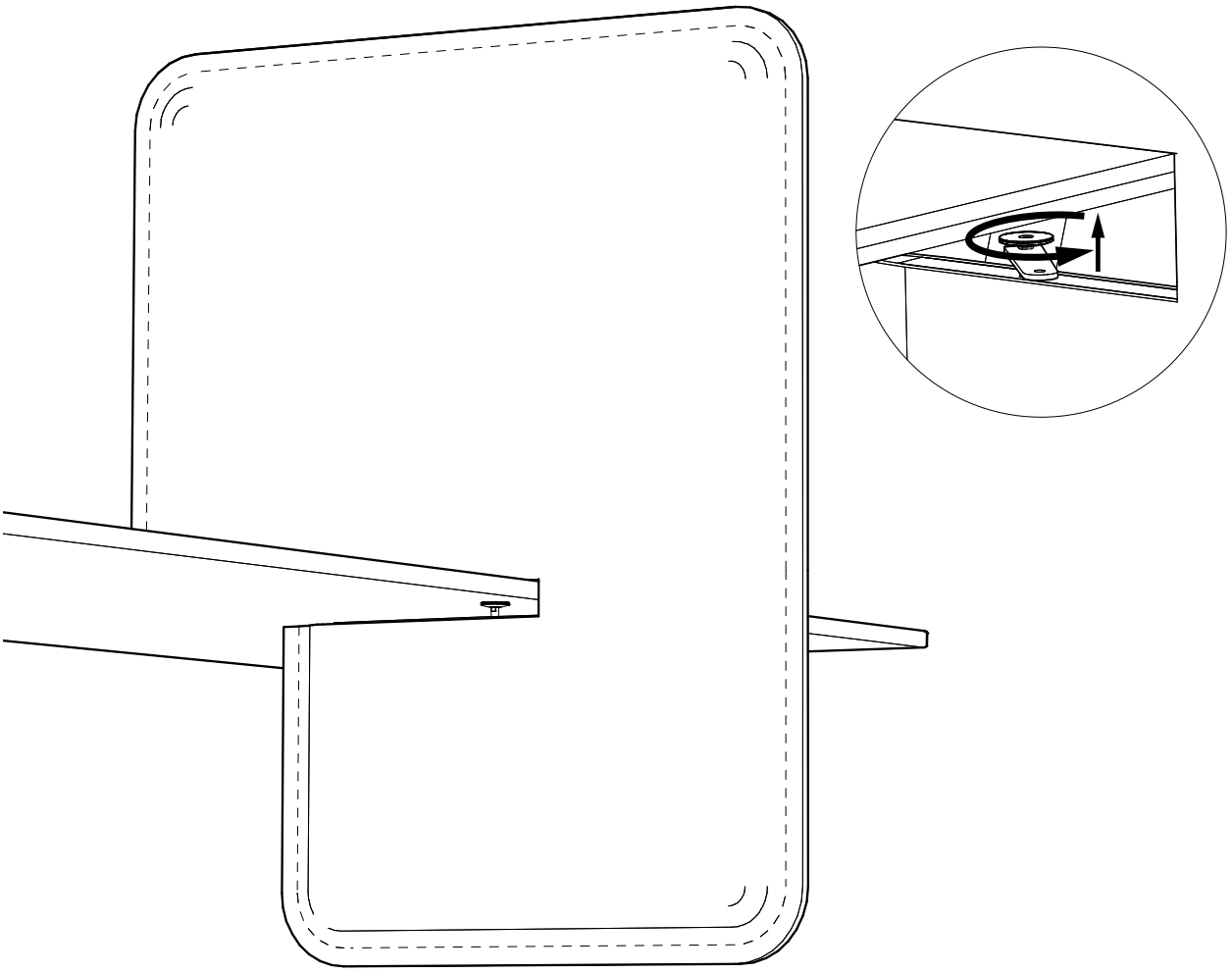

Dimensions

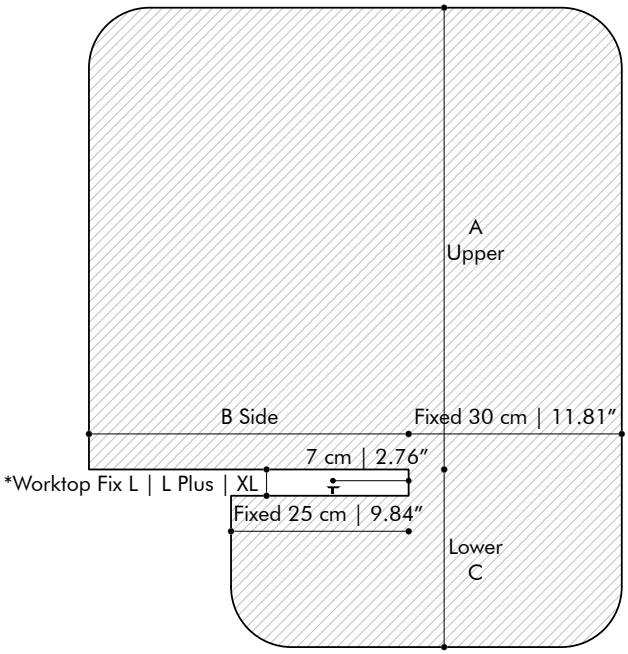

Thickness

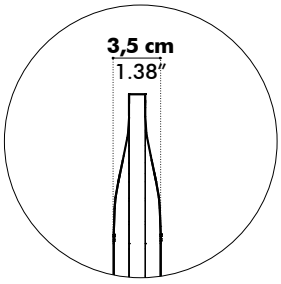

	A	B	C	⚖
S	**45 cm | 17.72″**	45 cm | 17.72″	25 cm | 9.84″	2,59 kg | 5.71 lbs
			45 cm | 17.72″	3,08 kg | 6.79 lbs
			65 cm | 25.59″	3,57 kg | 7.87 lbs
		65 cm | 25.59″	25 cm | 9.84″	2,87 kg | 6.33 lbs
			45 cm | 17.72″	3,44 kg | 7.58 lbs
			65 cm | 25.59″	4,01 kg | 8.84 lbs
M	**65 cm | 25.59″**	45 cm | 17.72″	25 cm | 9.84″	2,78 kg | 6.13 lbs
			45 cm | 17.72″	3,27 kg | 7.21 lbs
			65 cm | 25.59″	3,77 kg | 8.31 lbs
		65 cm | 25.59″	25 cm | 9.84″	3,25 kg | 7.17 lbs
			45 cm | 17.72″	3,83 kg | 8.44 lbs
			65 cm | 25.59″	4,40 kg | 9.70 lbs
L	**85 cm | 33.46″**	45 cm | 17.72″	25 cm | 9.84″	2,97 kg | 6.55 lbs
			45 cm | 17.72″	3,47 kg | 7.65 lbs
			65 cm | 25.59″	3,96 kg | 8.73 lbs
		65 cm | 25.59″	25 cm | 9.84″	3,25 kg | 7.17 lbs
			45 cm | 17.72″	3,83 kg | 8.44 lbs
			65 cm | 25.59″	4,40 kg | 9.70 lbs

*Worktop Fix	L	12 > 27 mm | 0.47″ > 1.06″	incl.
Integrated in Desk Split	L Plus	22 > 43 mm | 0.87″ > 1.69″	incl.
	XL	45 > 57 mm | 1.77″ > 2.24″	incl.

Tabletop Fix Requirement

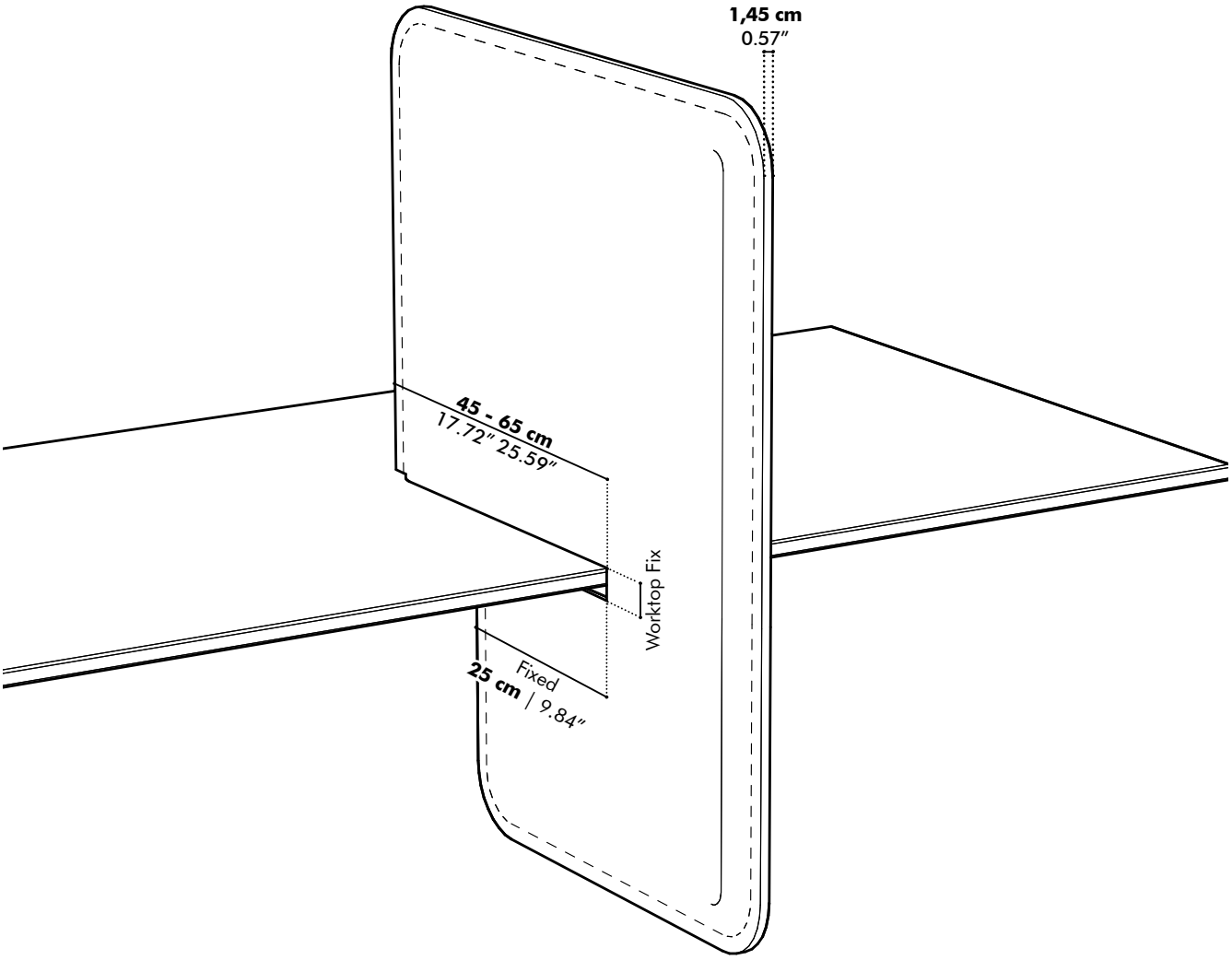

*Worktop Fix	L	12 > 27 mm | 0.47″ > 1.06″	incl.
Integrated in Desk Split	L Plus	22 > 43 mm | 0.87″ > 1.69″	incl.
	XL	45 > 57 mm | 1.77″ > 2.24″	incl.

Acoustics

BuzziDesk Split

Equivalent sound absorption area in m² per object

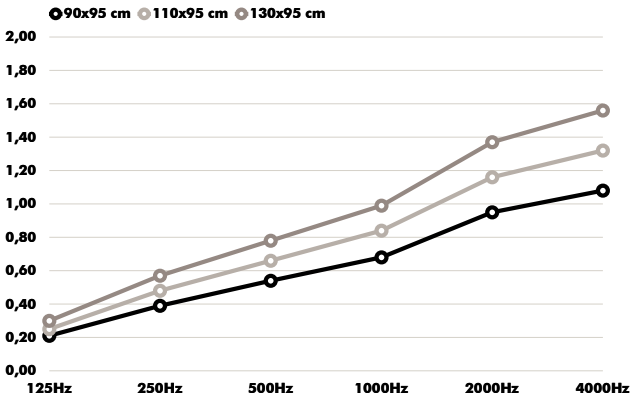

Hz	90x95 cm Aeq/m²	110x95 cm Aeq/m²	130x95 cm Aeq/m²
125	0.21	0.25	0.30
250	0.39	0.48	0.57
500	0.54	0.66	0.78
1000	0.68	0.84	0.99
2000	0.95	1.16	1.37
4000	1.08	1.32	1.56