SITE CLASSIFICATION REPORT SUMMARY

BLOCK:	**10**	**SECTION:**	**104**	**SUBURB:**	**Denman Prospect**
JOB No:	**88231.60**			**DATE:**	**August 2024**
CLIENT:	**Capital Estate Developments Pty Ltd**			**REF:**	**R.066.Rev0**

Classification Procedures:

Existing Subsurface Conditions: Refer attached test pit log(s) – Pit(s) 81,82 and Drawing 1.

Bulk Earthworks: Based on Douglas Partners records, controlled fill was placed within the block under Level 1 control as defined in AS 3798:2007 during subdivision construction.

Laboratory Results: Previous laboratory testing results indicated liquid limit ranging from 25-80%, plasticity index ranging from 12-57% and linear shrinkage ranging from 6-20%.

Site Classification: Site classification in accordance with AS2870:2011 provides guidance on the patterns and magnitude of moisture related seasonal ground movements that must be considered in design. Based on the current soil profile / state, on limited subsurface information, soil reactivity and allowing for variation in the subsoil profile, the soil profile would be equivalent to Class M* (moderately reactive/filled) conditions. The site classification must be reassessed should the subsurface profile change by either cutting or filling and/or if the presence of service trenches, retaining walls or submerged structures are within the zone of influence of the proposed footings. Reference must be made to the comments provided below.

Footing Systems: Reference must be made to AS2870:2011 which indicates footing systems that are appropriate for each site classification. All footings must found within a uniform bearing stratum of suitable strength/material, below the zone of influence of any service trenches, backfill zones, retaining walls or underground structures. Masonry walls should be articulated in accordance with current best practice. Dwelling design must ensure suitable drainage and uniform moisture conditions are maintained in the vicinity of footings. Footing systems must be confirmed by a structural engineer taking into consideration any onsite or offsite constraints.

Maintenance Guidelines: Reference should be made to the attached CSIRO Sheet BTF 18 'Foundation Maintenance & Footing Performance' to comments about gardens, landscaping and trees on the performance of foundation soils and in particular in respect to maintaining good surface drainage. It notes that minor cracking in most structures is inevitable, and it describes site maintenance practices aimed at minimising foundation movements that can lead to cracking damage.

Comments/Limitations:

The successful purchaser must make their own interpretations, deductions and conclusions from the information made available and will need to accept full responsibility for such interpretations, deductions and conclusions. To that end development specific geotechnical investigations must be undertaken and it is recommended that footing excavations be inspected by a geotechnical engineer.

Some variability in subsurface conditions must be anticipated with the possibility additional topsoils / fill may have been spread subsequent to the investigation.

Site preparation prior to the construction should include removal of all vegetation, topsoil and any uncontrolled fill and all new fill must be placed under controlled conditions (AS 3798:2007), otherwise Class P conditions would be warranted in those fill areas. Some remnant tree roots may still be present within the natural profile, generally embedded within the weathered rock, at the existing ground surface or below any controlled fill.

Depending on the depth of site cut and trenches, rock excavation may be required.

Moisture condition of site soils and/or the presence of groundwater may vary considerably from time of investigation compared to at the time of construction. Groundwater seepages are highly likely after heavy or prolonged rain.

This report must be read in conjunction with the attached "Limitations" and notes "About this Report".

References:

AS 2870:2011, Residential Slabs and Footings, Standards Australia.

AS 3798:2007, Guidelines on Earthworks for Commercial and Residential Developments, Standards Australia.

Attachments:

Limitations & About this Report	Test Pit Log(s) Pit(s) 81,82
Explanatory Notes	Drawing 1

Written by: Alastair Hirsch Reviewed by: Michael Jones

Douglas PARTNERS | GROUNDED EXPERTISE

Limitations:

Douglas Partners Pty Ltd (Douglas) has prepared this report for this project at Stage 7 Denman North Estate, Denman Prospect ACT in line with Douglas' proposal 88231.42.P.001.Rev1 dated 10 November 2022 and acceptance received from Capital Estate Developments Pty Ltd dated 10 November 2022. The work was carried out under Douglas' Engagement Terms. This report is provided for the exclusive use of Capital Estate Developments Pty Ltd for this project only and for the purposes as described in the report. It should not be used by or relied upon for other projects or purposes on the same or other site or by a third party. Any party so relying upon this report beyond its exclusive use and purpose as stated above, and without the express written consent of Douglas, does so entirely at its own risk and without recourse to Douglas for any loss or damage. In preparing this report Douglas has necessarily relied upon information provided by the client and/or their agents.

The results provided in the report are indicative of the sub-surface conditions on the site only at the specific sampling and/or testing locations, and then only to the depths investigated and at the time the work was carried out. Sub-surface conditions can change abruptly due to variable geological processes and also as a result of human influences. Such changes may occur after Douglas' field testing has been completed.

Douglas' advice is based upon the conditions encountered during this investigation. The accuracy of the advice provided by Douglas in this report may be affected by undetected variations in ground conditions across the site between and beyond the sampling and/or testing locations. The advice may also be limited by budget constraints imposed by others or by site accessibility.

The assessment of atypical safety hazards arising from this advice is restricted to the geotechnical components set out in this report and based on known project conditions and stated design advice and assumptions. While some recommendations for safe controls may be provided, detailed 'safety in design' assessment is outside the current scope of this report and requires additional project data and assessment.

The scope of work for this investigation/report did not include the assessment of surface or sub-surface materials or groundwater for contaminants, within or adjacent to the site. Should evidence of fill of unknown origin be noted in the report, and in particular the presence of building demolition materials, it should be recognised that there may be some risk that such fill may contain contaminants and hazardous building materials.

This report must be read in conjunction with all of the attached and should be kept in its entirety without separation of individual pages or sections. Douglas cannot be held responsible for interpretations or conclusions made by others unless they are supported by an expressed statement, interpretation, outcome or conclusion stated in this report.

This report, or sections from this report, should not be used as part of a specification for a project, without review and agreement by Douglas. This is because this report has been written as advice and opinion rather than instructions for construction.

About this Report

November 2023

Introduction

These notes have been provided to amplify DP's report in regard to classification methods, field procedures and the comments section. Not all are necessarily relevant to all reports.

DP's reports are based on information gained from limited subsurface excavations and sampling, supplemented by knowledge of local geology and experience. For this reason, they must be regarded as interpretive rather than factual documents, limited to some extent by the scope of information on which they rely.

Copyright

This report is the property of Douglas Partners Pty Ltd. The report may only be used for the purpose for which it was commissioned and in accordance with the Conditions of Engagement for the commission supplied at the time of proposal. Unauthorised use of this report in any form whatsoever is prohibited.

Borehole and Test Pit Logs

The borehole and test pit logs presented in this report are an engineering and/or geological interpretation of the subsurface conditions, and their reliability will depend to some extent on frequency of sampling and the method of drilling or excavation. Ideally, continuous undisturbed sampling or core drilling will provide the most reliable assessment, but this is not always practicable or possible to justify on economic grounds. In any case the boreholes and test pits represent only a very small sample of the total subsurface profile.

Interpretation of the information and its application to design and construction should therefore take into account the spacing of boreholes or pits, the frequency of sampling, and the possibility of other than 'straight line' variations between the test locations.

Groundwater

Where groundwater levels are measured in boreholes there are several potential problems, namely:

- In low permeability soils groundwater may enter the hole very slowly or perhaps not at all during the time the hole is left open;
- A localised, perched water table may lead to an erroneous indication of the true water table;
- Water table levels will vary from time to time with seasons or recent weather changes. They may not be the same at the time of construction as are indicated in the report; and
- The use of water or mud as a drilling fluid will mask any groundwater inflow. Water has to be blown out of the hole and drilling mud must first be washed out of the hole if water measurements are to be made.

More reliable measurements can be made by installing standpipes which are read at intervals over several days, or perhaps weeks for low permeability soils. Piezometers, sealed in a particular stratum, may be advisable in low permeability soils or where there may be interference from a perched water table.

Reports

The report has been prepared by qualified personnel, is based on the information obtained from field and laboratory testing, and has been undertaken to current engineering standards of interpretation and analysis. Where the report has been prepared for a specific design proposal, the information and interpretation may not be relevant if the design proposal is changed. If this happens, DP will be pleased to review the report and the sufficiency of the investigation work.

Every care is taken with the report as it relates to interpretation of subsurface conditions, discussion of geotechnical and environmental aspects, and recommendations or suggestions for design and construction. However, DP cannot always anticipate or assume responsibility for:

- Unexpected variations in ground conditions. The potential for this will depend partly on borehole or pit spacing and sampling frequency;
- Changes in policy or interpretations of policy by statutory authorities; or
- The actions of contractors responding to commercial pressures.

If these occur, DP will be pleased to assist with investigations or advice to resolve the matter.

continued next page

About this Report

Site Anomalies

In the event that conditions encountered on site during construction appear to vary from those which were expected from the information contained in the report, DP requests that it be immediately notified. Most problems are much more readily resolved when conditions are exposed rather than at some later stage, well after the event.

Information for Contractual Purposes

Where information obtained from this report is provided for tendering purposes, it is recommended that all information, including the written report and discussion, be made available. In circumstances where the discussion or comments section is not relevant to the contractual situation, it may be appropriate to prepare a specially edited document. DP would be pleased to assist in this regard and/or to make additional report copies available for contract purposes at a nominal charge.

Site Inspection

The company will always be pleased to provide engineering inspection services for geotechnical and environmental aspects of work to which this report is related. This could range from a site visit to confirm that conditions exposed are as expected, to full time engineering presence on site.

intentionally blank

intentionally blank

Terminology, Symbols and Abbreviations

November 2023

Introduction to Terminology, Symbols and Abbreviations

Douglas Partners' reports, investigation logs, and other correspondence may use terminology which has quantitative or qualitative connotations. To remove ambiguity or uncertainty surrounding the use of such terms, the following sets of notes pages may be attached Douglas Partners' reports, depending on the work performed and conditions encountered:

- Soil Descriptions;
- Rock Descriptions; and
- Sampling, insitu testing, and drilling methodologies

In addition to these pages, the following notes generally apply to most documents.

Abbreviation Codes

Site conditions may also be presented in a number of different formats, such as investigation logs, field mapping, or as a written summary. In some of these formats textual or symbolic terminology may be presented using textual abbreviation codes or graphic symbols, and, where commonly used, these are listed alongside the terminology definition. For ease of identification in these note pages, textual codes are presented in these notes in the following style XW. Code usage conforms with the following guidelines:

- Textual codes are case insensitive, although herein they are generally presented in upper case; and
- Textual codes are contextual (i.e. the same or similar combinations of characters may be used in different contexts with different meanings (for example `PL` is used for plastic limit in the context of soil moisture condition, as well as in `PL(A)` for point load test result in the testing results column)).

Data Integrity Codes

Subsurface investigation data recorded by Douglas Partners is generally managed in a highly structured database environment, where records "span" between a top and bottom depth interval. Depth interval "gaps" between records are considered to introduce ambiguity, and, where appropriate, our practice guidelines may require contiguous data sets. Recording meaningful data is not always appropriate (for example assigning a "strength" to a concrete pavement) and the following codes may be used to maintain contiguity in such circumstances.

Term	Description	Abbreviation Code
Core loss	No core recovery	KL
Unknown	Information was not available to allow classification of the property. For example, when auguring in loose, saturated sand auger cuttings may not be returned.	UK
No data	Information required to allow classification of the property was not available. For example if drilling is commenced from the base of a hole predrilled by others	ND
Not Applicable	Derivation of the properties not appropriate or beyond the scope of the investigation. For example providing a description of the strength of a concrete pavement	NA

Graphic Symbols

Douglas Partners' logs contain a "graphic" column which provides a pictorial representation of the basic composition of the material. The symbols used are directly representing the material name stated in the adjacent "Description of Strata" column, and as such no specific graphic symbology legend has been provided in these notes.

intentionally blank

Soil Descriptions

Introduction

All materials which are not considered to be "in-situ rock" are described in general accordance with the soil description model of AS 1726-2017 Part 6.1.3, and can be broken down into the following description structure:

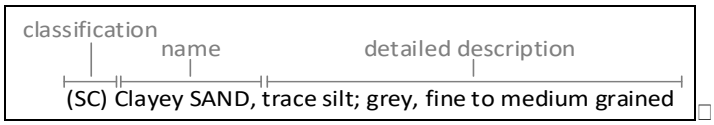

The "classification" comprises a two character "group symbol" providing a general summary of dominant soil characteristics. The "name" summarises the particle sizes within the soil which most influence its behaviour. The detailed description presents more information about composition, condition, structure, and origin of the soil.

Classification, naming and description of soils require the relative proportion of particles of different sizes within the whole soil mixture to be considered.

Particle size designation and Behaviour Model

Solid particles within a soil are differentiated on the basis of size.

The engineering behaviour properties of a soil can subsequently be modelled to be either "fine grained" (also known as "cohesive" behaviour) or "coarse grained" ("non cohesive" behaviour), depending on the relative proportion of fine or coarse fractions in the soil mixture.

Particle Size Designation	Particle Size (mm)	Behaviour Model	
		Behaviour	Approximate Dry Mass
Boulder	>200	Excluded from particle behaviour model as "oversize"	
Cobble	63 - 200		
Gravel[1]	2.36 - 63	Coarse	>65%
Sand[1]	0.075 - 2.36		
Silt	0.002 - 0.075	Fine	>35%
Clay	<0.002		

[1] – refer grain size subdivision descriptions below

The behaviour model boundaries defined above are not precise, and the material behaviour should be assumed from the name given to the material (which considers the particle fraction which dominates the behaviour, refer "component proportions" below), rather than strict observance of the proportions of particle sizes. For example, if a material is named a "Sandy CLAY", this is indicative that the material exhibits fine grained behaviour, even if the dry mass of coarse grained material may exceed 65%.

Component proportions

The relative proportion of the dry mass of each particle size fraction is assessed to be a "primary", "secondary", or "minor" component of the soil mixture, depending on its influence over the soil behaviour.

Component Proportion Designation	Definition[1]	Relative Proportion	
		In Fine Grained Soil	In Coarse Grained Soil
Primary	The component (particle size designation, refer above) which dominates the engineering behaviour of the soil	The clay/silt component with the greater proportion	The sand/gravel component with the greater proportion
Secondary	Any component which is not the primary, but is significant to the engineering properties of the soil	Any component with greater than 30% proportion	Any granular component with greater than 30%; or Any fine component with greater than 12%
Minor[2]	Present in the soil, but not significant to its engineering properties	All other components	All other components

[1] As defined in AS1726-2017 6.1.4.4

[2] In the detailed material description, minor components are split into two further sub-categories. Refer "identification of minor components" below.

Composite Materials

In certain situations, a lithology description may describe more than one material, for example, collectively describing a layer of interbedded sand and clay. In such a scenario, the two materials would be described independently, with the names preceded or followed by a statement describing the arrangement by which the materials co-exist. For example, "INTERBEDDED Silty CLAY AND SAND".

Soil Descriptions

Classification

The soil classification comprises a two character group symbol. The first character identifies the primary component. The second character identifies either the grading or presence of fines in a coarse grained soil, or the plasticity in a fine grained soil. Refer AS1726-2017 6.1.6 for further clarification.

Soil Name

For most soils, the name is derived with the primary component included as the noun (in upper case), preceded by any secondary components stated in an adjective form. In this way, the soil name also describes the general composition and indicates the dominant behaviour of the material.

Component [1]	Prominence in Soil Name
Primary	Noun (eg "CLAY")
Secondary	Adjective modifier (eg "Sandy")
Minor	No influence

[1] – for determination of component proportions, refer component proportions on previous page

For materials which cannot be disaggregated, or which are not comprised of rock or mineral fragments, the names "ORGANIC MATTER" or "ARTIFICIAL MATERIAL" may be used, in accordance with AS1726-2017 Table 14.

Commercial or colloquial names are not used for the soil name where a component derived name is possible (for example "Gravelly SAND" rather than "CRACKER DUST").

Materials of "fill" or "topsoil" origin are generally assigned a name derived from the primary/secondary component (where appropriate). In log descriptions this is preceded by uppercase "FILL" or "TOPSOIL". Origin uncertainty is indicated in the description by the characters (?), with the degree of uncertainty described (using the terms "probably" or "possibly" in the origin column, or at the end of the description).

Identification of minor components

Minor components are identified in the soil description immediately following the soil name. The minor component fraction is usually preceded with a term indicating the relative proportion of the component.

Minor Component Proportion Term	Relative Proportion	
	In Fine Grained Soil	In Coarse Grained Soil
With	All fractions: 15-30%	Clay/silt: 5-12% sand/gravel: 15-30%
Trace	All fractions: 0-15%	Clay/silt: 0-5% sand/gravel: 0-15%

The terms "with" and "trace" generally apply only to gravel or fine particle fractions. Where cobbles/boulders are encountered in minor proportions (generally less than about 12%) the term "occasional" may be used. This term describes the sporadic distribution of the material within the confines of the investigation excavation only, and there may be considerable variation in proportion over a wider area which is difficult to factually characterise due to the relative size of the particles and the investigation methods.

Soil Composition

Plasticity

Descriptive Term	Laboratory liquid limit range	
	Silt	Clay
Non-plastic materials	Not applicable	Not applicable
Low plasticity	≤50	≤35
Medium plasticity	Not applicable	>35 and ≤50
High plasticity	>50	>50

Note, Plasticity descriptions generally describe the plasticity behaviour of the whole of the fine grained soil, not individual fine grained fractions.

Grain Size

Type		Particle size (mm)
Gravel	Coarse	19 - 63
	Medium	6.7 - 19
	Fine	2.36 – 6.7
Sand	Coarse	0.6 - 2.36
	Medium	0.21 - 0.6
	Fine	0.075 - 0.21

Grading

Grading Term	Particle size (mm)
Well	A good representation of all particle sizes
Poorly	An excess or deficiency of particular sizes within the specified range
Uniformly	Essentially of one size
Gap	A deficiency of a particular size or size range within the total range

Note, AS1726-2017 provides terminology for additional attributes not listed here.

Soil Descriptions

Soil Condition

Moisture

The moisture condition of soils is assessed relative to the plastic limit for fine grained soils, while for coarse grained soils it is assessed based on the appearance and feel of the material. The moisture condition of a material is considered to be independent of stratigraphy (although commonly these are related), and this data is presented in its own column on logs.

Applicability	Term	Tactile Assessment	Abbreviation code
Fine	Dry of plastic limit	Hard and friable or powdery	w<PL
	Near plastic limit	Can be moulded	w=PL
	Wet of plastic limit	Water residue remains on hands when handling	w>PL
	Near liquid limit	"oozes" when agitated	w=LL
	Wet of liquid limit	"oozes"	w>LL
Coarse	Dry	Non-cohesive and free running	D
	Moist	Feels cool, darkened in colour, particles may stick together	M
	Wet	Feels cool, darkened in colour, particles may stick together, free water forms when handling	W

The abbreviation code NDF, meaning "not-assessable due to drilling fluid use" may also be used.

Note, observations relating to free ground water or drilling fluids are provided independent of soil moisture condition.

Consistency/Density/Compaction/Cementation/Extremely Weathered Material

These concepts give an indication of how the material may respond to applied forces (when considered in conjunction with other attributes of the soil). This behaviour can vary independent of the composition of the material, and on logs these are described in an independent column and are generally mutually exclusive (i.e it is inappropriate to describe both consistency and compaction at the same time). The method by which the behaviour is described depends on the behaviour model and other characteristics of the soil as follows:

- In fine grained soils, the "consistency" describes the ease with which the soil can be remoulded, and is generally correlated against the materials undrained shear strength;
- In granular materials, the relative density describes how tightly packed the particles are, and is generally correlated against the density index;
- In anthropogenically modified materials, the compaction of the material is described qualitatively;
- In cemented soils (both natural and anthropogenic), the cemented "strength" is described qualitatively, relative to the difficulty with which the material is disaggregated; and
- In soils of extremely weathered material origin, the engineering behaviour may be governed by relic rock features, and expected behaviour needs to be assessed based the overall material description.

Quantitative engineering performance of these materials may be determined by laboratory testing or estimated by correlated field tests (for example penetration or shear vane testing). In some cases, performance may be assessed by tactile or other subjective methods, in which case investigation logs will show the estimated value enclosed in round brackets, for example (VS).

Consistency (fine grained soils)

Consistency Term	Tactile Assessment	Undrained Shear Strength (kPa)	Abbreviation Code
Very soft	Extrudes between fingers when squeezed	<12	VS
Soft	Mouldable with light finger pressure	>12 - ≤25	S
Firm	Mouldable with strong finger pressure	>25 - ≤50	F
Stiff	Cannot be moulded by fingers	>50 - ≤100	St
Very stiff	Indented by thumbnail	>100 - ≤200	VSt
Hard	Indented by thumbnail with difficulty	>200	H
Friable	Easily crumbled or broken into small pieces by hand	-	Fr

Relative Density (coarse grained soils)

Relative Density Term	Density Index	Abbreviation Code
Very loose	<15	VL
Loose	>15 - ≤35	L
Medium dense	>35 - ≤65	MD
Dense	>65 - ≤85	D
Very dense	>85	VD

Note, tactile assessment of relative density is difficult, and generally requires penetration testing, hence a tactile assessment guide is not provided

Soil Descriptions

Compaction (anthropogenically modified soil)

Compaction Term	Abbreviation Code
Well compacted	WC
Poorly compacted	PC
Moderately compacted	MC
Variably compacted	VC

Cementation (natural and anthropogenic)

Cementation Term	Abbreviation Code
Moderately cemented	MOD
Weakly cemented	WEK

Extremely Weathered Material

AS1726-2017 considers weathered material to be soil if the unconfined compressive strength is less than 0.6 MPa (i.e. less than very low strength rock). These materials may be identified as "extremely weathered material" in reports and by the abbreviation code XWM on log sheets. This identification is not correlated to any specific qualitative or quantitative behaviour, and the engineering properties of this material must therefore be assessed according to engineering principles with reference to any relic rock structure, fabric, or texture described in the description.

Soil Origin

Term	Description	Abbreviation Code
Residual	Derived from in-situ weathering of the underlying rock	RS
Extremely weathered material	Formed from in-situ weathering of geological formations. Has strength of less than 'very low' as per as1726 but retains the structure or fabric of the parent rock.	XWM
Alluvial	Deposited by streams and rivers	ALV
Fluvial	Deposited by channel fill and overbank (natural levee, crevasse splay or flood basin)	FLV
Estuarine	Deposited in coastal estuaries	EST
Marine	Deposited in a marine environment	MAR
Lacustrine	Deposited in freshwater lakes	LAC
Aeolian	Carried and deposited by wind	AEO
Colluvial	Soil and rock debris transported down slopes by gravity	COL
Slopewash	Thin layers of soil and rock debris gradually and slowly deposited by gravity and possibly water	SW
Topsoil	Mantle of surface soil, often with high levels of organic material	TOP
Fill	Any material which has been moved by man	FILL
Littoral	Deposited on the lake or seashore	LIT
Unidentifiable	Not able to be identified	UID

Cobbles and Boulders

The presence of particles considered to be "oversize" may be described using one of the following strategies:

- Oversize encountered in a minor proportion (when considered relative to the wider area) are noted in the soil description; or
- Where a significant proportion of oversize is encountered, the cobbles/boulders are described independent of the soil description, in a similar manner to composite soils (described above) but qualified with "MIXTURE OF".

intentionally blank

Rock Strength

Rock strength is defined by the unconfined compressive strength, and it refers to the strength of the rock substance and not the strength of the overall rock mass, which may be considerably weaker due to defects.

The Point Load Strength Index $I_{s(50)}$ is commonly used to provide an estimate of the rock strength and site specific correlations should be developed to allow UCS values to be determined. The point load strength test procedure is described by Australian Standard AS4133.4.1-2007. The terms used to describe rock strength are as follows:

Strength Term	Unconfined Compressive Strength (MPa)	Point Load Index[1] $I_{s(50)}$ MPa	Abbreviation Code
Very low	0.6 - 2	0.03 - 0.1	VL
Low	2 - 6	0.1 - 0.3	L
Medium	6 - 20	0.3 - 1.0	M
High	20 - 60	1 - 3	H
Very high	60 - 200	3 - 10	VH
Extremely high	>200	>10	EH

[1] Rock strength classification is based on UCS. The UCS to $I_{s(50)}$ ratio varies significantly for different rock types and specific ratios may be required for each site. The point load Index ranges shown above are as suggested in AS1726 and should not be relied upon without supporting evidence.

The following abbreviation codes are used for soil layers or seams of material "within rock" but for which the equivalent UCS strength is less than 0.6 MPa.

Scenario	Abbreviation Code
The material encountered has an equivalent UCS strength of less than 0.6 MPa, and therefore is considered to be soil (as per Note 1 of Table 20 of AS 1726-2017). The properties of the material encountered over this interval are described in the "Description of Strata" and soil properties columns.	SOIL
The material encountered has an equivalent UCS strength of less than 0.6 MPa, and therefore is considered to be soil (as per Note 1 of Table 20 of AS 1726-2017). The prominence of the material is such that it can be considered to be a seam (as defined in Table 22 of AS1726-2017) and the properties of the material are described in the defect column.	SEAM

Degree of Weathering

The degree of weathering of rock is classified as follows:

Weathering Term	Description	Abbreviation Code
Residual Soil[1]	Material is weathered to such an extent that it has soil properties. Mass structure and material texture and fabric of original rock are no longer visible, but the soil has not been significantly transported.	RS
Extremely weathered[1]	Material is weathered to such an extent that it has soil properties. Mass structure and material texture and fabric of original rock are still visible	XW
Highly weathered	The whole of the rock material is discoloured, usually by iron staining or bleaching to the extent that the colour of the original rock is not recognisable. Rock strength is significantly changed by weathering. Some primary minerals have weathered to clay minerals. Porosity may be increased by leaching or may be decreased due to deposition of weathering products in pores.	HW
Moderately weathered	The whole of the rock material is discoloured, usually by iron staining or bleaching to the extent that the colour of the original rock is not recognisable but shows little or no change of strength from fresh rock.	MW
Slightly weathered	Rock is partially discoloured with staining or bleaching along joints but shows little or no change of strength from fresh rock.	SW
Fresh	No signs of decomposition or staining.	FR
Note: If HW and MW cannot be differentiated use DW (see below)		
Distinctly weathered	Rock strength usually changed by weathering. The rock may be highly discoloured, usually by iron staining. Porosity may be increased by leaching or may be decreased due to deposition of weathered products in pores.	DW

[1] The parent rock type, of which the residual/extremely weathered material is a derivative, will be stated in the description (where discernible).

Degree of Alteration

The degree of alteration of the rock material (physical or chemical changes caused by hot gasses or liquids at depth) is classified as follows:

Term	Description	Abbreviation Code
Extremely altered	Material is altered to such an extent that it has soil properties. Mass structure and material texture and fabric of original rock are still visible.	XA
Highly altered	The whole of the rock material is discoloured, usually by staining or bleaching to the extent that the colour of the original rock is not recognisable. Rock strength is changed by alteration. Some primary minerals are altered to clay minerals. Porosity may be increased by leaching or may be decreased due to precipitation of secondary materials in pores.	HA
Moderately altered	The whole of the rock material is discoloured, usually by staining or bleaching to the extent that the colour of the original rock is not recognisable but shows little or no change of strength from fresh rock.	MA
Slightly altered	Rock is slightly discoloured but shows little or no change of strength from fresh rock	SA
Note: If HA and MA cannot be differentiated use DA (see below)		
Distinctly altered	Rock strength usually changed by alteration. The rock may be highly discoloured, usually by staining or bleaching. Porosity may be increased by leaching or may be decreased due to precipitation of secondary minerals in pores.	DA

Degree of Fracturing

The following descriptive classification apply to the spacing of natural occurring fractures in the rock mass. It includes bedding plane partings, joints and other defects, but excludes drilling breaks. These terms are generally not required on investigation logs where fracture spacing is presented as a histogram, and where used are presented in an unabbreviated format.

Term	Description
Fragmented	Fragments of <20 mm
Highly Fractured	Core lengths of 20-40 mm with occasional fragments
Fractured	Core lengths of 30-100 mm with occasional shorter and longer sections
Slightly Fractured	Core lengths of 300 mm or longer with occasional sections of 100-300 mm
Unbroken	Core contains very few fractures

Rock Quality Designation

The quality of the cored rock can be measured using the Rock Quality Designation (RQD) index, defined as:

$$\text{RQD \%} = \frac{\text{cumulative length of 'sound' core sections} > \text{100 mm long}}{\text{total drilled length of section being assessed}}$$

where 'sound' rock is assessed to be rock of low strength or stronger. The RQD applies only to natural fractures. If the core is broken by drilling or handling (i.e., drilling breaks) then the broken pieces are fitted back together and are not included in the calculation of RQD.

Stratification Spacing

These terms may be used to describe the spacing of bedding partings in sedimentary rocks. Where used, these terms are generally presented in an unabbreviated format

Term	Separation of Stratification Planes
Thinly laminated	< 6 mm
Laminated	6 mm to 20 mm
Very thinly bedded	20 mm to 60 mm
Thinly bedded	60 mm to 0.2 m
Medium bedded	0.2 m to 0.6 m
Thickly bedded	0.6 m to 2 m
Very thickly bedded	> 2 m

Rock Descriptions

Defect Descriptions

Defect Type

Term	Abbreviation Code
Bedding plane	B
Cleavage	CL
Crushed seam	CS
Crushed zone	CZ
Drilling break	DB
Decomposed seam	DS
Drill lift	DL
Extremely Weathered seam	EW
Fault	F
Fracture	FC
Fragmented	FG
Handling break	HB
Infilled seam	IS
Joint	JT
Lamination	LAM
Shear seam	SS
Shear zone	SZ
Vein	VN
Mechanical break	MB
Parting	P
Sheared Surface	S

Rock Defect Orientation

Term	Abbreviation Code
Horizontal	H
Vertical	V
Sub-horizontal	SH
Sub-vertical	SV

Rock Defect Coating

Term	Abbreviation Code
Clean	CN
Coating	CT
Healed	HE
Infilled	INF
Stained	SN
Tight	TI
Veneer	VNR

Rock Defect Infill

Term	Abbreviation Code
Calcite	CA
Carbonaceous	CBS
Clay	CLAY
Iron oxide	FE
Manganese	MN
Pyrite	Py
Secondary material	MS
Silt	M
Quartz	Qz
Unidentified material	MU

Rock Defect Shape/Planarity

Term	Abbreviation Code
Curved	CU
Discontinuous	DIS
Irregular	IR
Planar	PR
Stepped	ST
Undulating	UN

Rock Defect Roughness

Term	Abbreviation Code
Polished	PO
Rough	RF
Smooth	SM
Slickensided	SL
Very rough	VR

Defect Orientation
The inclination of defects is always measured from the perpendicular to the core axis

intentionally blank

Sampling and Testing

A record of samples retained, and field testing performed is usually shown on a Douglas Partners' log with samples appearing to the left of a depth scale, and selected field and laboratory testing (including results, where relevant) appearing to the right of the scale, as illustrated below:

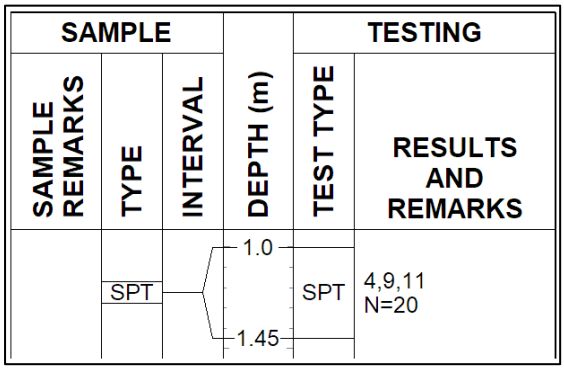

Sampling

The type or intended purpose for which a sample was taken is indicated by the following abbreviation codes.

Sample Type	Code
Auger sample	A
Acid Sulfate sample	ASS
Bulk sample	B
Core sample	C
Disturbed sample	D
Environmental sample	ES
Gas sample	G
Piston sample	P
Sample from SPT test	SPT
Undisturbed tube sample	U[1]
Water sample	W
Material Sample	MT
Core sample for unconfined compressive strength testing	UCS

[1] – numeric suffixes indicate tube diameter/width in mm

The above codes only indicate that a sample was retained, and not that testing was scheduled or performed.

Field and Laboratory Testing

A record that field and laboratory testing was performed is indicated by the following abbreviation codes.

Test Type	Code
Pocket penetrometer (kPa)	PP
Photo ionisation detector (ppm)	PID
Standard Penetration Test x/y = x blows for y mm penetration HB = hammer bouncing HW = fell under weight of hammer	SPT
Shear vane (kPa)	V
Unconfined compressive strength, (MPa)	UCS

Field and laboratory testing (continued)

Test Type	Code
Point load test, (MPa), axial (A), diametric (D), irregular (I)	PLT(_)
Dynamic cone penetrometer, followed by blow count penetration increment in mm (cone tip, generally in accordance with AS1289.6.3.2)	DCP/150
Perth sand penetrometer, followed by blow count penetration increment in mm (flat tip, generally in accordance with AS1289.6.3.3)	PSP/150

Groundwater Observations

▷	seepage/inflow
▽	standing or observed water level
NFGWO	no free groundwater observed
OBS	observations obscured by drilling fluids

Drilling or Excavation Methods/Tools

The drilling/excavation methods used to perform the investigation may be shown either in a dedicated column down the left-hand edge of the log, or stated in the log footer. In some circumstances abbreviation codes may be used.

Method	Abbreviation Code
Direct Push	DP
Solid flight auger. Suffixes: /T = tungsten carbide tip, /V = v-shaped tip	AD[1]
Air Track	AT
Diatube	DT[1]
Hand auger	HA[1]
Hand tools (unspecified)	HAND
Existing exposure	X
Hollow flight auger	HSA[1]
HQ coring	HQ3
HMLC series coring	HMLC
NMLC series coring	NMLC
NQ coring	NQ3
PQ coring	PQ3
Predrilled	PD
Push tube	PT[1]
Ripping tyne/ripper	R
Rock roller	RR[1]
Rock breaker/hydraulic hammer	EH
Sonic drilling	SON[1]
Mud/blade bucket	MB[1]
Toothed bucket	TB[1]
Vibrocore	VC[1]
Vacuum excavation	VE
Wash bore (unspecified bit type)	WB[1]

[1] – numeric suffixes indicate tool diameter/width in mm

FOUNDATION MAINTENANCE AND FOOTING PERFORMANCE

Understanding and preventing soil-related building movement

This Building Technology Resource is designed to identify causes of soil-related building movement, and to suggest methods of prevention of resultant cracking.

Buildings can and often do move. This movement can be up, down, lateral or rotational. The fundamental cause of movement in buildings can usually be related to one or more problems in the foundation soil. It is important for the home owner to identify the soil type in order to ascertain the measures that should be put in place in order to ensure that problems in the foundation soil can be prevented, thus protecting against building movement.

SOIL TYPES

The types of soils usually present under the topsoil in land zoned for residential buildings can be split into two approximate groups – granular and clay. Quite often, foundation soil is a mixture of both types. The general problems associated with soils having granular content are usually caused by erosion. Clay soils are subject to saturation and swell/shrink problems.

Classifications for a given area can generally be obtained by application to the local authority, but these are sometimes unreliable and if there is doubt, a geotechnical report should be commissioned. As most buildings suffering movement problems are founded on clay soils, there is an emphasis on classification of soils according to the amount of swell and shrinkage they experience with variations of water content. Table 1 below is a reproduction of Table 2.1 from Australian Standard AS 2870-2011, Residential slabs and footings.

CAUSES OF MOVEMENT

SETTLEMENT DUE TO CONSTRUCTION

There are two types of settlement that occur as a result of construction:

- Immediate settlement occurs when a building is first placed on its foundation soil, as a result of compaction of the soil under the weight of the structure. The cohesive quality of clay soil mitigates against this, but granular (particularly sandy) soil is susceptible.
- Consolidation settlement is a feature of clay soil and may take place because of the expulsion of moisture from the soil or because of the soil's lack of resistance to local compressive or shear stresses. This will usually take place during the first few months after construction but has been known to take many years in exceptional cases.

These problems may be the province of the builder and should be taken into consideration as part of the preparation of the site for construction.

EROSION

All soils are prone to erosion, but sandy soil is particularly susceptible to being washed away. Even clay with a sand component of say 10% or more can suffer from erosion.

SATURATION

This is particularly a problem in clay soils. Saturation creates a bog-like suspension of the soil that causes it to lose virtually all of its bearing capacity. To a lesser degree, sand is affected by saturation because saturated sand may undergo a reduction in volume, particularly imported sand fill for bedding and blinding layers. However, this usually occurs as immediate settlement and should normally be the province of the builder.

SEASONAL SWELLING AND SHRINKAGE OF SOIL

All clays react to the presence of water by slowly absorbing it, making the soil increase in volume (see table below, from AS 2870). The degree of increase varies considerably between different clays, as does the degree of decrease during the subsequent drying out caused by fair weather periods. Because of the low absorption and expulsion rate, this phenomenon will not usually be noticeable unless there are prolonged rainy or dry periods, usually of weeks or months, depending on the land and soil characteristics.

The swelling of soil creates an upward force on the footings of the building, and shrinkage creates subsidence that takes away the support needed by the footing to retain equilibrium.

SHEAR FAILURE

This phenomenon occurs when the foundation soil does not have sufficient strength to support the weight of the footing. There are two major post-construction causes:

- Significant load increase.
- Reduction of lateral support of the soil under the footing due to erosion or excavation.

In clay soil, shear failure can be caused by saturation of the soil adjacent to or under the footing.

TREE ROOT GROWTH

Trees and shrubs that are allowed to grow in the vicinity of footings can cause foundation soil movement in two ways:

- Roots that grow under footings may increase in cross-sectional size, exerting upward pressure on footings.

TABLE 1. GENERAL DEFINITIONS OF SITE CLASSES.

Class	Foundation
A	Most sand and rock sites with little or no ground movement from moisture changes
S	Slightly reactive clay sites, which may experience only slight ground movement from moisture changes
M	Moderately reactive clay or silt sites, which may experience moderate ground movement from moisture changes
H1	Highly reactive clay sites, which may experience high ground movement from moisture changes
H2	Highly reactive clay sites, which may experience very high ground movement from moisture changes
F	Extremely reactive sites, which may experience extreme ground movement from moisture changes

Source: Reproduced with the permission of Standards Australia Limited © 2011. Copyright in AS 2870-2011 Residential slabs and footings vests in Standards Australia Limited.

© CSIRO 2021

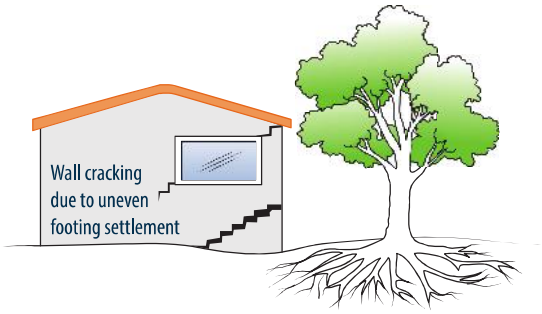

FIGURE 1 Trees can cause shrinkage and damage.

- Roots in the vicinity of footings will absorb much of the moisture in the foundation soil, causing shrinkage or subsidence.

UNEVENNESS OF MOVEMENT

The types of ground movement described above usually occur unevenly throughout the building's foundation soil. Settlement due to construction tends to be uneven because of:

- Differing compaction of foundation soil prior to construction.
- Differing moisture content of foundation soil prior to construction.

Movement due to non-construction causes is usually more uneven still. Erosion can undermine a footing that traverses the flow or can create the conditions for shear failure by eroding soil adjacent to a footing that runs in the same direction as the flow.

Saturation of clay foundation soil may occur where subfloor walls create a dam that makes water pond. It can also occur wherever there is a source of water near footings in clay soil. This leads to a severe reduction in the strength of the soil which may create local shear failure.

Seasonal swelling and shrinkage of clay soil affects the perimeter of the building first, then gradually spreads to the interior through absorption. The swelling process will usually begin at the uphill extreme of the building, or on the weather side where the land is flat. Shrinkage usually begins on the side of the building where the sun's heat is greatest.

EFFECTS OF UNEVEN SOIL MOVEMENT ON STRUCTURES

EROSION AND SATURATION

Erosion removes the support from under footings, tending to create subsidence of the part of the structure under which it occurs. Brickwork walls will resist the stress created by this removal of support by bridging the gap or cantilevering until the bricks or the mortar bedding fail. Older masonry has little resistance. Evidence of failure varies according to circumstances and symptoms may include:

- Step cracking in the mortar beds in the body of the wall or above/below openings such as doors or windows.
- Vertical cracking in the bricks (usually but not necessarily in line with the vertical beds or perpends).

Isolated piers affected by erosion or saturation of foundations will eventually lose contact with the bearers they support and may tilt or fall over. The floors that have lost this support will become bouncy, sometimes rattling ornaments etc.

SEASONAL SWELLING/SHRINKAGE IN CLAY

Swelling foundation soil due to rainy periods first lifts the most exposed extremities of the footing system, then the remainder of the perimeter footings while gradually permeating inside the building footprint to lift internal footings. This swelling first tends to create a dish effect, because the external footings are pushed higher than the internal ones.

The first noticeable symptom may be that the floor appears slightly dished. This is often accompanied by some doors binding on the floor or the door head, together with some cracking of cornice mitres. In buildings with timber flooring supported by bearers and joists, the floor can be bouncy. Externally there may be visible dishing of the hip or ridge lines.

As the moisture absorption process completes its journey to the innermost areas of the building, the internal footings will rise. If the spread of moisture is roughly even, it may be that the symptoms will temporarily disappear, but it is more likely that swelling will be uneven, creating a difference rather than a disappearance in symptoms. In buildings with timber flooring supported by bearers and joists, the isolated piers will rise more easily than the strip footings or piers under walls, creating noticeable doming of flooring.

As the weather pattern changes and the soil begins to dry out, the external footings will be first affected, beginning with the locations where the sun's effect is strongest. This has the effect of lowering the external footings. The doming is accentuated, and cracking reduces or disappears where it occurred because of dishing, but other cracks open up. The roof lines may become convex.

Doming and dishing are also affected by weather in other ways. In areas where warm, wet summers and cooler dry winters prevail, water migration tends to be toward the interior and doming will be accentuated, whereas where summers are dry, and winters are cold and wet, migration tends to be toward the exterior and the underlying propensity is toward dishing.

MOVEMENT CAUSED BY TREE ROOTS

In general, growing roots will exert an upward pressure on footings, whereas soil subject to drying because of tree or shrub roots will tend to remove support from under footings by inducing shrinkage.

COMPLICATIONS CAUSED BY THE STRUCTURE ITSELF

Most forces that the soil causes to be exerted on structures are vertical – i.e. either up or down. However, because these forces are seldom spread evenly around the footings, and because the building resists uneven movement because of its rigidity, forces are exerted from one part of the building to another. The net result of all these forces is usually rotational. This resultant force often complicates the diagnosis because the visible symptoms do not simply reflect the original cause. A common symptom is binding of doors on the vertical member of the frame.

EFFECTS ON FULL MASONRY STRUCTURES

Brickwork will resist cracking where it can. It will attempt to span areas that lose support because of subsided foundations or raised points. It is therefore usual to see cracking at weak points, such as openings for windows or doors.

In the event of construction settlement, cracking will usually remain unchanged after the process of settlement has ceased.

With local shear or erosion, cracking will usually continue to develop until the original cause has been remedied, or until the subsidence has completely neutralised the affected portion of footing and the structure has stabilised on other footings that remain effective.

In the case of swell/shrink effects, the brickwork will in some cases return to its original position after completion of a cycle, however it is more likely that the rotational effect will not be exactly reversed, and it is also usual that brickwork will settle in its new position and will resist the forces trying to return it to its original position. This means that in a case where swelling takes place after construction and cracking occurs, the cracking is likely to at least partly remain after the shrink segment of the cycle is complete. Thus, each time the cycle is repeated, the likelihood is that the cracking will become wider until the sections of brickwork become virtually independent.

With repeated cycles, once the cracking is established, if there is no other complication, it is normal for the incidence of cracking to stabilise, as the building has the articulation it needs to cope with the problem. This is by no means always the case, however, and monitoring of cracks in walls and floors should always be treated seriously.

Upheaval caused by growth of tree roots under footings is not a simple vertical shear stress. There is a tendency for the root to also

© CSIRO 2021

exert lateral forces that attempt to separate sections of brickwork after initial cracking has occurred.

The normal structural arrangement is that the inner leaf of brickwork in the external walls and at least some of the internal walls (depending on the roof type) comprise the load-bearing structure on which any upper floors, ceilings and the roof are supported. In these cases, it is internally visible cracking that should be the main focus of attention, however there are a few examples of dwellings whose external leaf of masonry plays some supporting role, so this should be checked if there is any doubt. In any case, externally visible cracking is important as a guide to stresses on the structure generally, and it should also be remembered that the external walls must be capable of supporting themselves.

EFFECTS ON FRAMED STRUCTURES

Timber or steel framed buildings are less likely to exhibit cracking due to swell/shrink than masonry buildings because of their flexibility. Also, the doming/dishing effects tend to be lower because of the lighter weight of walls. The main risks to framed buildings are encountered because of the isolated pier footings used under walls. Where erosion or saturation causes a footing to fall away, this can double the span which a wall must bridge. This additional stress can create cracking in wall linings, particularly where there is a weak point in the structure caused by a door or window opening. It is, however, unlikely that framed structures will be so stressed as to suffer serious damage without first exhibiting some or all of the above symptoms for a considerable period. The same warning period should apply in the case of upheaval. It should be noted, however, that where framed buildings are supported by strip footings there is only one leaf of brickwork and therefore the externally visible walls are the supporting structure for the building. In this case, the subfloor masonry walls can be expected to behave as full brickwork walls.

EFFECTS ON BRICK VENEER STRUCTURES

Because the load-bearing structure of a brick veneer building is the frame that makes up the interior leaf of the external walls plus perhaps the internal walls, depending on the type of roof, the building can be expected to behave as a framed structure, except that the external masonry will behave in a similar way to the external leaf of a full masonry structure.

WATER SERVICE AND DRAINAGE

Where a water service pipe, a sewer or stormwater drainage pipe is in the vicinity of a building, a water leak can cause erosion, swelling or saturation of susceptible soil. Even a minuscule leak can be enough to saturate a clay foundation. A leaking tap near a building can have the same effect. In addition, trenches containing pipes can become watercourses even though backfilled, particularly where broken rubble is used as fill. Water that runs along these trenches can be responsible for serious erosion, interstrata seepage into subfloor areas and saturation.

Pipe leakage and trench water flows also encourage tree and shrub roots to the source of water, complicating and exacerbating the problem. Poor roof plumbing can result in large volumes of rainwater being concentrated in a small area of soil:

- Incorrect falls in roof guttering may result in overflows, as may gutters blocked with leaves etc.
- Corroded guttering or downpipes can spill water to ground.
- Downpipes not positively connected to a proper stormwater collection system will direct a concentration of water to soil that is directly adjacent to footings, sometimes causing large-scale problems such as erosion, saturation and migration of water under the building.

SERIOUSNESS OF CRACKING

In general, most cracking found in masonry walls is a cosmetic nuisance only and can be kept in repair or even ignored. Table 2 below is a reproduction of Table C1 of AS 2870-2011.

AS 2870-2011 also publishes figures relating to cracking in concrete floors, however because wall cracking will usually reach the critical point significantly earlier than cracking in slabs, this table is not reproduced here.

PREVENTION AND CURE

PLUMBING

Where building movement is caused by water service, roof plumbing, sewer or stormwater failure, the remedy is to repair the problem. It is prudent, however, to consider also rerouting pipes away from the building where possible and relocating taps to positions where any leakage will not direct water to the building vicinity. Even where gully traps are present, there is sometimes sufficient spill to create erosion or saturation, particularly in modern installations using smaller diameter PVC fixtures. Indeed, some gully traps are not situated directly under the taps that are installed to charge them, with the result that water from the tap may enter the backfilled trench that houses the sewer piping. If the trench has been poorly backfilled, the water will either pond or flow along the bottom of the trench. As these trenches usually run alongside the footings and can be at a similar depth, it is not hard to see how any water that is thus directed into a trench can easily affect the foundation's ability to support footings or even gain entry to the subfloor area.

GROUND DRAINAGE

In all soils there is the capacity for water to travel on the surface and below it. Surface water flows can be established by inspection during and after heavy or prolonged rain. If necessary, a grated drain system connected to the stormwater collection system is usually an easy solution.

It is, however, sometimes necessary when attempting to prevent water migration that testing be carried out to establish watertable height and subsoil water flows. This subject may be regarded as an area for an expert consultant.

PROTECTION OF THE BUILDING PERIMETER

It is essential to remember that the soil that affects footings extends well beyond the actual building line. Watering of garden plants, shrubs and trees causes some of the most serious water problems.

For this reason, particularly where problems exist or are likely to occur, it is recommended that an apron of paving be installed around as much of the building perimeter as necessary. This paving should extend outwards a minimum of 900 mm (more in highly reactive soil) and should have a minimum fall away from the building of 1:60. The finished paving should be no less than 100 mm below brick vent bases.

It is prudent to relocate drainage pipes away from this paving, if possible, to avoid complications from future leakage. If this is not practical, earthenware pipes should be replaced by PVC and backfilling should be of the same soil type as the surrounding soil and compacted to the same density.

Except in areas where freezing of water is an issue, it is wise to remove taps in the building area and relocate them well away from the building – preferably not uphill.

It may be desirable to install a grated drain at the outside edge of the paving on the uphill side of the building. If subsoil drainage is needed this can be installed under the surface drain.

CONDENSATION

In buildings with a subfloor void, such as where bearers and joists support flooring, insufficient ventilation creates ideal conditions for condensation, particularly where there is little clearance between the floor and the ground. Condensation adds to the moisture already present in the subfloor and significantly slows the process of drying out. Installation of an adequate subfloor ventilation system, either natural or mechanical, is desirable.

© CSIRO 2021

TABLE 2. CLASSIFICATION OF DAMAGE WITH REFERENCE TO WALLS.

Description of typical damage and required repair	Approximate crack width limit	Damage category
Hairline cracks	<0.1 mm	0 – Negligible
Fine cracks which do not need repair	<1 mm	1 – Very Slight
Cracks noticeable but easily filled. Doors and windows stick slightly.	<5 mm	2 – Slight
Cracks can be repaired and possibly a small amount of wall will need to be replaced. Doors and windows stick. Service pipes can fracture. Weathertightness often impaired.	5–15 mm (or a number of cracks 3 mm or more in one group)	3 – Moderate
Extensive repair work involving breaking-out and replacing sections of walls, especially over doors and windows. Window and door frames distort. Walls lean or bulge noticeably, some loss of bearing in beams. Service pipes disrupted.	15–25 mm but also depends on number of cracks	4 – Severe

Source: Reproduced with the permission of Standards Australia Limited © 2011. Copyright in AS 2870-2011 Residential slabs and footings vests in Standards Australia Limited.

Warning: Although this Building Technology Resource deals with cracking in buildings, it should be said that subfloor moisture can result in the development of other problems, notably:

- Water that is transmitted into masonry, metal or timber building elements causes damage and/or decay to those elements.
- High subfloor humidity and moisture content create an ideal environment for various pests, including termites and spiders, and mould.
- Where high moisture levels are transmitted to the flooring and walls, an increase in the dust mite count can ensue within the living areas. Dust mites, as well as dampness in general, can be a health hazard to inhabitants, particularly those who are abnormally susceptible to respiratory ailments.

THE GARDEN

The ideal vegetation layout is to have lawn or plants that require only light watering immediately adjacent to the drainage or paving edge, then more demanding plants, shrubs and trees spread out in that order.

Overwatering due to misuse of automatic watering systems is a common cause of saturation and water migration under footings. If it is necessary to use these systems, it is important to remove garden beds to a completely safe distance from buildings.

EXISTING TREES

Where a tree is causing a problem of soil drying or there is the existence or threat of upheaval of footings, if the offending roots are subsidiary and their removal will not significantly damage the tree, they should be severed and a concrete or metal barrier placed vertically in the soil to prevent future root growth in the direction of the building. If it is not possible to remove the relevant roots without damage to the tree, an application to remove the tree should be made to the local authority. A prudent plan is to transplant likely offenders before they become a problem.

INFORMATION ON TREES, PLANTS AND SHRUBS

State departments overseeing agriculture can give information regarding root patterns, volume of water needed and safe distance from buildings of most species. Botanic gardens are also sources of information.

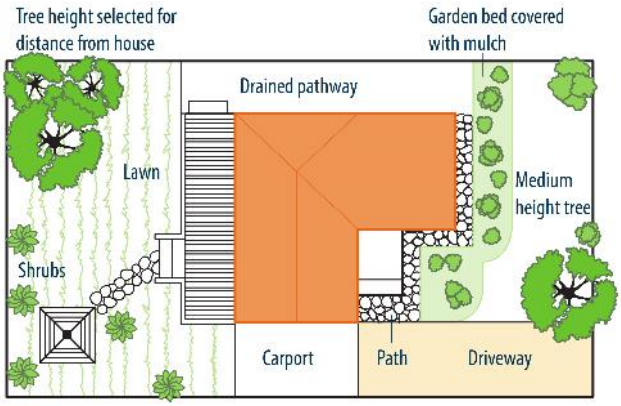

FIGURE 2 Gardens for a reactive site.

EXCAVATION

Excavation around footings must be properly engineered. Soil supporting footings can only be safely excavated at an angle that allows the soil under the footing to remain stable. This angle is called the angle of repose (or friction) and varies significantly between soil types and conditions. Removal of soil within the angle of repose will cause subsidence.

REMEDIATION

Where erosion has occurred that has washed away soil adjacent to footings, soil of the same classification should be introduced and compacted to the same density. Where footings have been undermined, augmentation or other specialist work may be required. Remediation of footings and foundations is generally the realm of a specialist consultant.

Where isolated footings rise and fall because of swell/shrink effect, the home owner may be tempted to alleviate floor bounce by filling the gap that has appeared between the bearer and the pier with blocking. The danger here is that when the next swell segment of the cycle occurs, the extra blocking will push the floor up into an accentuated dome and may also cause local shear failure in the soil. If it is necessary to use blocking, it should be by a pair of fine wedges and monitoring should be carried out fortnightly.

CSIROPUBLISHING

1300 788 000 | +61 3 9545 8400 | publishing.sales@csiro.au | www.publish.csiro.au
For information about CSIRO testing services visit www.csiro.au/en/work-with-us/services
ISBN 9781486312962 (print)/9781486312979 (digital) © CSIRO 2021
(replaces Building Technology File 18, 18-2011 and Information Sheet 10/91)
Unauthorised copying of this material is prohibited.

IMPORTANT DISCLAIMER: This information is prepared for Australia and general in nature. It may be incomplete or inapplicable in some cases.
Laws and regulations may vary in different places. Seek specialist advice for your particular circumstances.
To the extent permitted by law, CSIRO excludes all liability to any person for any loss, damage, cost or other consequence that may result from using this information.

© CSIRO 2021

TERMS AND CONDITIONS: BUILDING TECHNOLOGY RESOURCES

CONDITIONS OF USE

This publication may only be used in accordance with the following terms:

1. CSIRO (which for the purposes of these terms includes CSIRO Publishing) and its licensees own the copyright in the publication and will retain all rights, title and interest in and to the publication.
2. Once downloaded, the downloaded PDF publication may be provided by the user that initially downloads the PDF publication to other users by electronic mail once for each user licence purchased subject and pursuant to paragraph 4 below. The publication may not otherwise be copied or circulated electronically, including, for the avoidance of doubt, by electronic mail, even for internal use.
3. The downloaded publication may be printed, but the number of copies that may be printed is limited to the number of user licences purchased. That is, each user may print one (1) copy of the publication only.
4. The number of user licences purchased is shown on the tax invoice provided at the time of purchase. For the avoidance of doubt, the user that initially downloads the PDF publication shall be taken to be one (1) user. For example, if two (2) user licences are purchased, the publication may only be shared once to one (1) other user and printed once by each user (i.e. a maximum of two (2) hardcopy versions of the publication may be printed).
5. The publication (whether in PDF or printed format) may only be used for personal, internal, non-commercial purposes.
6. The publication and all its content is subject to copyright and unauthorised copying is prohibited.
7. Reproduction, renting, leasing, re-selling, sub-licensing, assignment or any supply of the publication, in print or electronically, is not permitted.
8. Retransmission, caching, networking or posting of the downloaded PDF publication is strictly prohibited.
9. Content may not be extracted for any reason and derivative works based on the publication are not permitted. The publication and any of its content may not be copied, reformatted, adapted, modified, translated, merged, reverse engineered, decompiled, dissembled or changed in any way and otherwise must not be used in a manner that would infringe the copyrights therein.
10. Ownership, copyright, trade mark, confidentiality or other marks or legends (including any digital watermark or similar) on or in the publication must not be removed, altered or obscured.
11. The security of the publication mut be protected at all times.
12. CSIRO will not provide any updating service for the publication. That is, purchasing the publication only entitles access to the publication as current at the date of purchase and does not entitle access to any amended, changed or updated version of the publication. CSIRO is not obliged to notify purchasers or users if the publication is amended, changed, updated or withdrawn after purchase.
13. If you purchased this publication via the CSIRO Publishing website, the PDF publication will remain available on the CSIRO Publishing website for 48 hours after purchasing. In the event of a communication problem during downloading, re-download the publication within 48 hours of purchase. After that time, the publication will no longer be accessible via the CSIRO Publishing website.
14. The right to use this publication pursuant to these terms will continue indefinitely, but will terminate automatically and without notice for any failure to comply with these terms. Upon termination all copies of the publication must be deleted and/or destroyed.
15. CSIRO nor any other person, to the extent permitted by law, has made or makes any representation or warranty of any kind in relation to the publication.
16. Without limiting the foregoing in any way, the information contained in the publication is general in nature. It may be incomplete or inapplicable in some cases. Laws and regulations may vary in different places. Seek specialist advice for your particular circumstances.
17. To the extent permitted by law, CSIRO excludes all liability to any person for any loss, damage, cost or other consequence that may result from using this publication and the information in it.
18. For reproduction of the publication or any portions or other use outside the circumstances set out in these terms, prior written permission of CSIRO must be sought. Please contact: publishing@csiro.au

TEST PIT LOG

CLIENT: Capital Estate Developments Pty Ltd
PROJECT: Proposed Residential Subdivision
LOCATION: Stage 7 Denman North Estate, Denman Prospect

SURFACE LEVEL: 584 AHD
COORDINATE: E:200926, N:602844
DATUM/GRID: ACT Stromlo
DIP/AZIMUTH: 90°/---°

LOCATION ID: 81
PROJECT No: 88231.60
DATE: 06/08/24
SHEET: 1 of 1

CONDITIONS ENCOUNTERED								SAMPLE				TESTING AND REMARKS	
GROUNDWATER	RL (m)	DEPTH (m)	DESCRIPTION OF STRATA	GRAPHIC	ORIGIN(#)	CONSIS.(*) DENSITY.(*)	MOISTURE	REMARKS	TYPE	INTERVAL	DEPTH (m)	TEST TYPE	RESULTS AND REMARKS
06/08/24 No free groundwater observed			TOPSOIL / Silty Sandy CLAY (CL): brown; low plasticity; fine to coarse sand. FILL.		TOP and FILL	NA	w<PL						
		0.20	FILL / Sandy Gravelly CLAY (CL), trace silt, trace cobbles: brown; low plasticity; fine to coarse sand; fine to coarse gravel.		FILL	(VSt) to (H)	w<PL		D		0.50		
	583												
		1							D		1.00		
		1.10	FILL / Sandy CLAY (CL-CI): grey brown; low to medium plasticity; fine to coarse sand; pockets of high plasticity clay.		FILL	(VSt)	w<PL to w=PL		D		1.30		
	582												
			Test Pit discontinued at 1.70m depth. Limit of investigation.										

NOTES: (#) Soil origin is "probable" unless otherwise stated. (*) Consistency/Relative density shading is for visual reference only - no correlation between cohesive and granular materials is implied.

PLANT: CAT 306 CR mini excavator
OPERATOR: Bingley Electrical Pty Ltd
LOGGED: Miller
METHOD: 300mm wide bucket
REMARKS: Surface levels and coordinates are approximate only and must not be relied upon.

Refer to explanatory notes for symbol and abbreviation definitions

Douglas PARTNERS

Generated with CORE-GS by Geroc - Soil Log

TEST PIT LOG

CLIENT: Capital Estate Developments Pty Ltd
PROJECT: Proposed Residential Subdivision
LOCATION: Stage 7 Denman North Estate, Denman Prospect

SURFACE LEVEL: 583 AHD
COORDINATE: E:200946, N:602856
DATUM/GRID: ACT Stromlo
DIP/AZIMUTH: 90°/---°

LOCATION ID: 82
PROJECT No: 88231.60
DATE: 06/08/24
SHEET: 1 of 1

CONDITIONS ENCOUNTERED								SAMPLE				TESTING AND REMARKS	
GROUNDWATER	RL (m)	DEPTH (m)	DESCRIPTION OF STRATA	GRAPHIC	ORIGIN(#)	CONSIS.(*) DENSITY.(*)	MOISTURE	REMARKS	TYPE	INTERVAL	DEPTH (m)	TEST TYPE	RESULTS AND REMARKS
06/08/24 No free groundwater observed			TOPSOIL / Silty Sandy CLAY (CL): brown; low plasticity; fine to coarse sand. FILL.		TOP and FILL	NA	w<PL						
		0.20	FILL / Sandy Gravelly CLAY (CL), with cobbles: brown; low plasticity; fine to coarse sand; fine to coarse gravel.		FILL	(VSt)	w<PL		D		0.80		
	582	1.00	FILL / Silty Sandy CLAY (CI): orange brown; medium plasticity; fine to coarse sand.		FILL	(VSt)	w<PL		D		1.10		
	581		Test Pit discontinued at 1.20m depth. Limit of investigation.										

NOTES: (#) Soil origin is "probable" unless otherwise stated. (*) Consistency/Relative density shading is for visual reference only - no correlation between cohesive and granular materials is implied.

PLANT: CAT 306 CR mini excavator
OPERATOR: Bingley Electrical Pty Ltd
LOGGED: Hoctor
METHOD: 300mm wide bucket
REMARKS: Surface levels and coordinates are approximate only and must not be relied upon.

Refer to explanatory notes for symbol and abbreviation definitions

Douglas PARTNERS

Generated with CORE-GS by Geroc - Soil Log

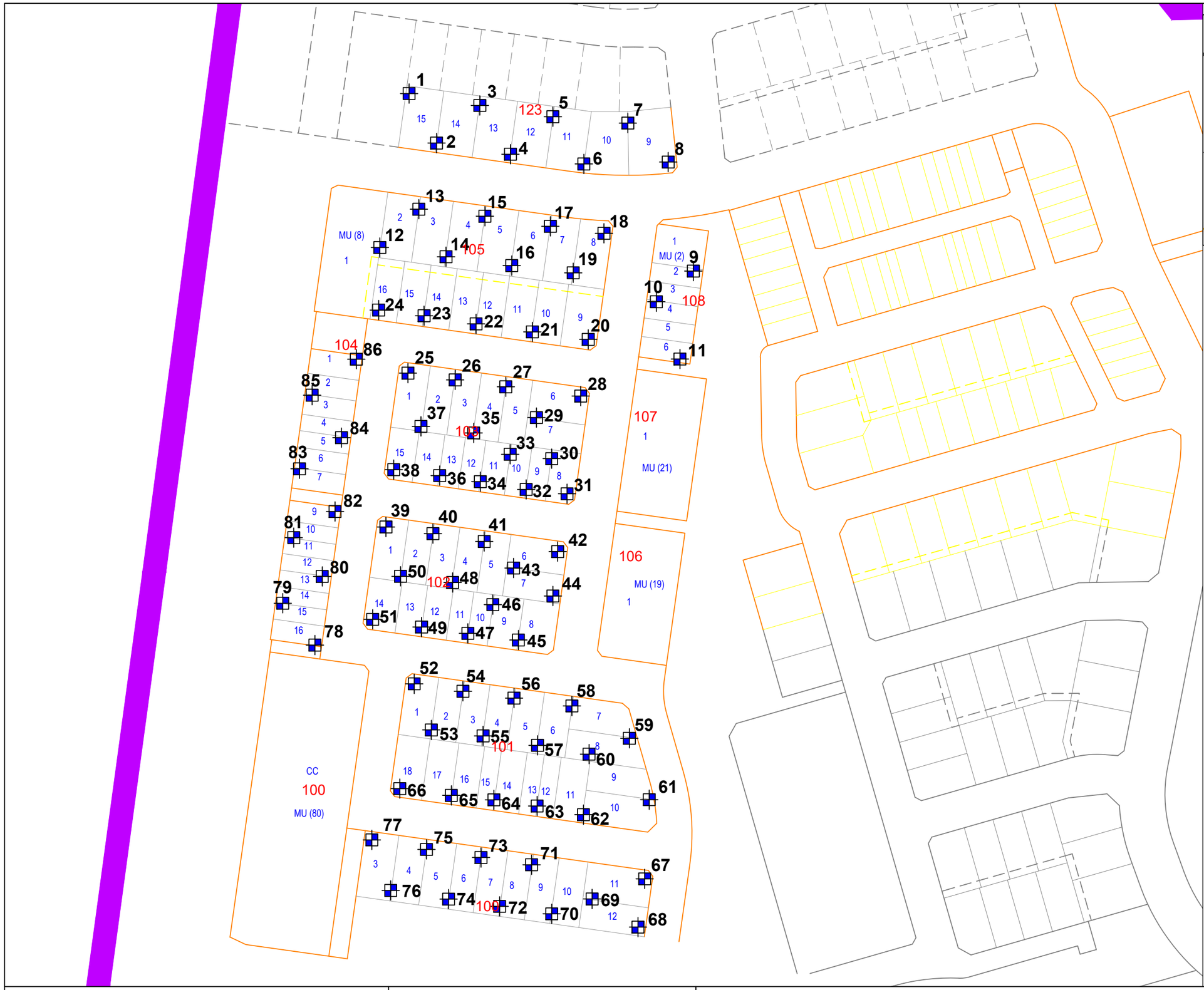

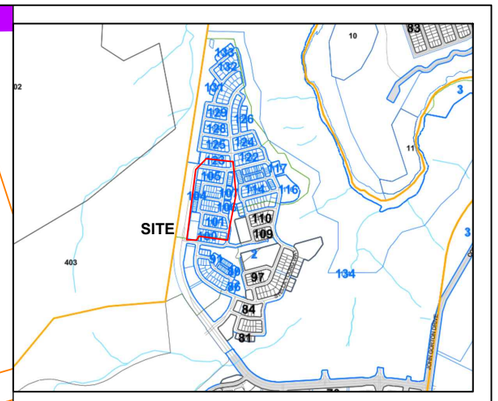

Locality Plan

LEGEND

Test Pit Location

0 17.5 35 52.5 70 87.5

1:1750 @ A3

NOTE: Base drawing from Huon
(Drawing Depth Range Plot, dated 8 June 2023)

Douglas PARTNERS

GROUNDED EXPERTISE

CLIENT: Capital Estate Developments Pty Ltd	TITLE: **Test Location Plan**	PROJECT No: 88231.60	
OFFICE: Canberra / DRAWN BY: FM	**Proposed Residential Subdivision**	DRAWING No: 1	
SCALE: As Shown / DATE: 28.05.2024	**Stage 7 Denman North Estate, Denman Prospect**	REVISION: 0	

SITE CLASSIFICATION REPORT SUMMARY

BLOCK:	**11**	**SECTION:**	**104**	**SUBURB:**	**Denman Prospect**
JOB No:	**88231.60**			**DATE:**	**August 2024**
CLIENT:	**Capital Estate Developments Pty Ltd**			**REF:**	**R.067.Rev0**

Classification Procedures:

Existing Subsurface Conditions: Refer attached test pit log(s) – Pit(s) 80,81 and Drawing 1.

Bulk Earthworks: Based on Douglas Partners records, controlled fill was placed within the block under Level 1 control as defined in AS 3798:2007 during subdivision construction.

Laboratory Results: Previous laboratory testing results indicated liquid limit ranging from 25-80%, plasticity index ranging from 12-57% and linear shrinkage ranging from 6-20%.

Site Classification: Site classification in accordance with AS2870:2011 provides guidance on the patterns and magnitude of moisture related seasonal ground movements that must be considered in design. Based on the current soil profile / state, on limited subsurface information, soil reactivity and allowing for variation in the subsoil profile, the soil profile would be equivalent to Class M* (moderately reactive/filled) conditions. The site classification must be reassessed should the subsurface profile change by either cutting or filling and/or if the presence of service trenches, retaining walls or submerged structures are within the zone of influence of the proposed footings. Reference must be made to the comments provided below.

Footing Systems: Reference must be made to AS2870:2011 which indicates footing systems that are appropriate for each site classification. All footings must found within a uniform bearing stratum of suitable strength/material, below the zone of influence of any service trenches, backfill zones, retaining walls or underground structures. Masonry walls should be articulated in accordance with current best practice. Dwelling design must ensure suitable drainage and uniform moisture conditions are maintained in the vicinity of footings. Footing systems must be confirmed by a structural engineer taking into consideration any onsite or offsite constraints.

Maintenance Guidelines: Reference should be made to the attached CSIRO Sheet BTF 18 'Foundation Maintenance & Footing Performance' to comments about gardens, landscaping and trees on the performance of foundation soils and in particular in respect to maintaining good surface drainage. It notes that minor cracking in most structures is inevitable, and it describes site maintenance practices aimed at minimising foundation movements that can lead to cracking damage.

Comments/Limitations:

The successful purchaser must make their own interpretations, deductions and conclusions from the information made available and will need to accept full responsibility for such interpretations, deductions and conclusions. To that end development specific geotechnical investigations must be undertaken and it is recommended that footing excavations be inspected by a geotechnical engineer.

Some variability in subsurface conditions must be anticipated with the possibility additional topsoils / fill may have been spread subsequent to the investigation.

Site preparation prior to the construction should include removal of all vegetation, topsoil and any uncontrolled fill and all new fill must be placed under controlled conditions (AS 3798:2007), otherwise Class P conditions would be warranted in those fill areas. Some remnant tree roots may still be present within the natural profile, generally embedded within the weathered rock, at the existing ground surface or below any controlled fill.

Depending on the depth of site cut and trenches, rock excavation may be required.

Moisture condition of site soils and/or the presence of groundwater may vary considerably from time of investigation compared to at the time of construction. Groundwater seepages are highly likely after heavy or prolonged rain.

This report must be read in conjunction with the attached "Limitations" and notes "About this Report".

References:

AS 2870:2011, Residential Slabs and Footings, Standards Australia.

AS 3798:2007, Guidelines on Earthworks for Commercial and Residential Developments, Standards Australia.

Attachments:

Limitations & About this Report	Test Pit Log(s) Pit(s) 80,81
Explanatory Notes	Drawing 1

Written by: Alastair Hirsch Reviewed by: Michael Jones

Douglas PARTNERS | GROUNDED EXPERTISE

Limitations:

Douglas Partners Pty Ltd (Douglas) has prepared this report for this project at Stage 7 Denman North Estate, Denman Prospect ACT in line with Douglas' proposal 88231.42.P.001.Rev1 dated 10 November 2022 and acceptance received from Capital Estate Developments Pty Ltd dated 10 November 2022. The work was carried out under Douglas' Engagement Terms. This report is provided for the exclusive use of Capital Estate Developments Pty Ltd for this project only and for the purposes as described in the report. It should not be used by or relied upon for other projects or purposes on the same or other site or by a third party. Any party so relying upon this report beyond its exclusive use and purpose as stated above, and without the express written consent of Douglas, does so entirely at its own risk and without recourse to Douglas for any loss or damage. In preparing this report Douglas has necessarily relied upon information provided by the client and/or their agents.

The results provided in the report are indicative of the sub-surface conditions on the site only at the specific sampling and/or testing locations, and then only to the depths investigated and at the time the work was carried out. Sub-surface conditions can change abruptly due to variable geological processes and also as a result of human influences. Such changes may occur after Douglas' field testing has been completed.

Douglas' advice is based upon the conditions encountered during this investigation. The accuracy of the advice provided by Douglas in this report may be affected by undetected variations in ground conditions across the site between and beyond the sampling and/or testing locations. The advice may also be limited by budget constraints imposed by others or by site accessibility.

The assessment of atypical safety hazards arising from this advice is restricted to the geotechnical components set out in this report and based on known project conditions and stated design advice and assumptions. While some recommendations for safe controls may be provided, detailed 'safety in design' assessment is outside the current scope of this report and requires additional project data and assessment.

The scope of work for this investigation/report did not include the assessment of surface or sub-surface materials or groundwater for contaminants, within or adjacent to the site. Should evidence of fill of unknown origin be noted in the report, and in particular the presence of building demolition materials, it should be recognised that there may be some risk that such fill may contain contaminants and hazardous building materials.

This report must be read in conjunction with all of the attached and should be kept in its entirety without separation of individual pages or sections. Douglas cannot be held responsible for interpretations or conclusions made by others unless they are supported by an expressed statement, interpretation, outcome or conclusion stated in this report.

This report, or sections from this report, should not be used as part of a specification for a project, without review and agreement by Douglas. This is because this report has been written as advice and opinion rather than instructions for construction.

About this Report

November 2023

Introduction

These notes have been provided to amplify DP's report in regard to classification methods, field procedures and the comments section. Not all are necessarily relevant to all reports.

DP's reports are based on information gained from limited subsurface excavations and sampling, supplemented by knowledge of local geology and experience. For this reason, they must be regarded as interpretive rather than factual documents, limited to some extent by the scope of information on which they rely.

Copyright

This report is the property of Douglas Partners Pty Ltd. The report may only be used for the purpose for which it was commissioned and in accordance with the Conditions of Engagement for the commission supplied at the time of proposal. Unauthorised use of this report in any form whatsoever is prohibited.

Borehole and Test Pit Logs

The borehole and test pit logs presented in this report are an engineering and/or geological interpretation of the subsurface conditions, and their reliability will depend to some extent on frequency of sampling and the method of drilling or excavation. Ideally, continuous undisturbed sampling or core drilling will provide the most reliable assessment, but this is not always practicable or possible to justify on economic grounds. In any case the boreholes and test pits represent only a very small sample of the total subsurface profile.

Interpretation of the information and its application to design and construction should therefore take into account the spacing of boreholes or pits, the frequency of sampling, and the possibility of other than 'straight line' variations between the test locations.

Groundwater

Where groundwater levels are measured in boreholes there are several potential problems, namely:

- In low permeability soils groundwater may enter the hole very slowly or perhaps not at all during the time the hole is left open;
- A localised, perched water table may lead to an erroneous indication of the true water table;
- Water table levels will vary from time to time with seasons or recent weather changes. They may not be the same at the time of construction as are indicated in the report; and
- The use of water or mud as a drilling fluid will mask any groundwater inflow. Water has to be blown out of the hole and drilling mud must first be washed out of the hole if water measurements are to be made.

More reliable measurements can be made by installing standpipes which are read at intervals over several days, or perhaps weeks for low permeability soils. Piezometers, sealed in a particular stratum, may be advisable in low permeability soils or where there may be interference from a perched water table.

Reports

The report has been prepared by qualified personnel, is based on the information obtained from field and laboratory testing, and has been undertaken to current engineering standards of interpretation and analysis. Where the report has been prepared for a specific design proposal, the information and interpretation may not be relevant if the design proposal is changed. If this happens, DP will be pleased to review the report and the sufficiency of the investigation work.

Every care is taken with the report as it relates to interpretation of subsurface conditions, discussion of geotechnical and environmental aspects, and recommendations or suggestions for design and construction. However, DP cannot always anticipate or assume responsibility for:

- Unexpected variations in ground conditions. The potential for this will depend partly on borehole or pit spacing and sampling frequency;
- Changes in policy or interpretations of policy by statutory authorities; or
- The actions of contractors responding to commercial pressures.

If these occur, DP will be pleased to assist with investigations or advice to resolve the matter.

continued next page

About this Report

Site Anomalies

In the event that conditions encountered on site during construction appear to vary from those which were expected from the information contained in the report, DP requests that it be immediately notified. Most problems are much more readily resolved when conditions are exposed rather than at some later stage, well after the event.

Information for Contractual Purposes

Where information obtained from this report is provided for tendering purposes, it is recommended that all information, including the written report and discussion, be made available. In circumstances where the discussion or comments section is not relevant to the contractual situation, it may be appropriate to prepare a specially edited document. DP would be pleased to assist in this regard and/or to make additional report copies available for contract purposes at a nominal charge.

Site Inspection

The company will always be pleased to provide engineering inspection services for geotechnical and environmental aspects of work to which this report is related. This could range from a site visit to confirm that conditions exposed are as expected, to full time engineering presence on site.

intentionally blank

intentionally blank

Terminology, Symbols and Abbreviations

November 2023

Introduction to Terminology, Symbols and Abbreviations

Douglas Partners' reports, investigation logs, and other correspondence may use terminology which has quantitative or qualitative connotations. To remove ambiguity or uncertainty surrounding the use of such terms, the following sets of notes pages may be attached Douglas Partners' reports, depending on the work performed and conditions encountered:

- Soil Descriptions;
- Rock Descriptions; and
- Sampling, insitu testing, and drilling methodologies

In addition to these pages, the following notes generally apply to most documents.

Abbreviation Codes

Site conditions may also be presented in a number of different formats, such as investigation logs, field mapping, or as a written summary. In some of these formats textual or symbolic terminology may be presented using textual abbreviation codes or graphic symbols, and, where commonly used, these are listed alongside the terminology definition. For ease of identification in these note pages, textual codes are presented in these notes in the following style XW. Code usage conforms with the following guidelines:

- Textual codes are case insensitive, although herein they are generally presented in upper case; and
- Textual codes are contextual (i.e. the same or similar combinations of characters may be used in different contexts with different meanings (for example `PL` is used for plastic limit in the context of soil moisture condition, as well as in `PL(A)` for point load test result in the testing results column)).

Data Integrity Codes

Subsurface investigation data recorded by Douglas Partners is generally managed in a highly structured database environment, where records "span" between a top and bottom depth interval. Depth interval "gaps" between records are considered to introduce ambiguity, and, where appropriate, our practice guidelines may require contiguous data sets. Recording meaningful data is not always appropriate (for example assigning a "strength" to a concrete pavement) and the following codes may be used to maintain contiguity in such circumstances.

Term	Description	Abbreviation Code
Core loss	No core recovery	KL
Unknown	Information was not available to allow classification of the property. For example, when auguring in loose, saturated sand auger cuttings may not be returned.	UK
No data	Information required to allow classification of the property was not available. For example if drilling is commenced from the base of a hole predrilled by others	ND
Not Applicable	Derivation of the properties not appropriate or beyond the scope of the investigation. For example providing a description of the strength of a concrete pavement	NA

Graphic Symbols

Douglas Partners' logs contain a "graphic" column which provides a pictorial representation of the basic composition of the material. The symbols used are directly representing the material name stated in the adjacent "Description of Strata" column, and as such no specific graphic symbology legend has been provided in these notes.

intentionally blank

Soil Descriptions

Introduction

All materials which are not considered to be "in-situ rock" are described in general accordance with the soil description model of AS 1726-2017 Part 6.1.3, and can be broken down into the following description structure:

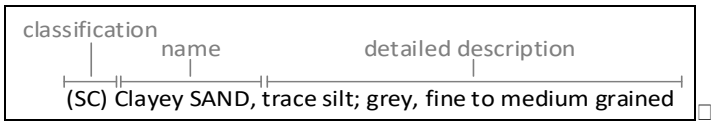

The "classification" comprises a two character "group symbol" providing a general summary of dominant soil characteristics. The "name" summarises the particle sizes within the soil which most influence its behaviour. The detailed description presents more information about composition, condition, structure, and origin of the soil.

Classification, naming and description of soils require the relative proportion of particles of different sizes within the whole soil mixture to be considered.

Particle size designation and Behaviour Model

Solid particles within a soil are differentiated on the basis of size.

The engineering behaviour properties of a soil can subsequently be modelled to be either "fine grained" (also known as "cohesive" behaviour) or "coarse grained" ("non cohesive" behaviour), depending on the relative proportion of fine or coarse fractions in the soil mixture.

Particle Size Designation	Particle Size (mm)	Behaviour Model	
		Behaviour	Approximate Dry Mass
Boulder	>200	Excluded from particle behaviour model as "oversize"	
Cobble	63 - 200		
Gravel[1]	2.36 - 63	Coarse	>65%
Sand[1]	0.075 - 2.36		
Silt	0.002 - 0.075	Fine	>35%
Clay	<0.002		

[1] – refer grain size subdivision descriptions below

The behaviour model boundaries defined above are not precise, and the material behaviour should be assumed from the name given to the material (which considers the particle fraction which dominates the behaviour, refer "component proportions" below), rather than strict observance of the proportions of particle sizes. For example, if a material is named a "Sandy CLAY", this is indicative that the material exhibits fine grained behaviour, even if the dry mass of coarse grained material may exceed 65%.

Component proportions

The relative proportion of the dry mass of each particle size fraction is assessed to be a "primary", "secondary", or "minor" component of the soil mixture, depending on its influence over the soil behaviour.

Component Proportion Designation	Definition[1]	Relative Proportion	
		In Fine Grained Soil	In Coarse Grained Soil
Primary	The component (particle size designation, refer above) which dominates the engineering behaviour of the soil	The clay/silt component with the greater proportion	The sand/gravel component with the greater proportion
Secondary	Any component which is not the primary, but is significant to the engineering properties of the soil	Any component with greater than 30% proportion	Any granular component with greater than 30%; or Any fine component with greater than 12%
Minor[2]	Present in the soil, but not significant to its engineering properties	All other components	All other components

[1] As defined in AS1726-2017 6.1.4.4

[2] In the detailed material description, minor components are split into two further sub-categories. Refer "identification of minor components" below.

Composite Materials

In certain situations, a lithology description may describe more than one material, for example, collectively describing a layer of interbedded sand and clay. In such a scenario, the two materials would be described independently, with the names preceded or followed by a statement describing the arrangement by which the materials co-exist. For example, "INTERBEDDED Silty CLAY AND SAND".

Soil Descriptions

Classification

The soil classification comprises a two character group symbol. The first character identifies the primary component. The second character identifies either the grading or presence of fines in a coarse grained soil, or the plasticity in a fine grained soil. Refer AS1726-2017 6.1.6 for further clarification.

Soil Name

For most soils, the name is derived with the primary component included as the noun (in upper case), preceded by any secondary components stated in an adjective form. In this way, the soil name also describes the general composition and indicates the dominant behaviour of the material.

Component [1]	Prominence in Soil Name
Primary	Noun (eg "CLAY")
Secondary	Adjective modifier (eg "Sandy")
Minor	No influence

[1] – for determination of component proportions, refer component proportions on previous page

For materials which cannot be disaggregated, or which are not comprised of rock or mineral fragments, the names "ORGANIC MATTER" or "ARTIFICIAL MATERIAL" may be used, in accordance with AS1726-2017 Table 14.

Commercial or colloquial names are not used for the soil name where a component derived name is possible (for example "Gravelly SAND" rather than "CRACKER DUST").

Materials of "fill" or "topsoil" origin are generally assigned a name derived from the primary/secondary component (where appropriate). In log descriptions this is preceded by uppercase "FILL" or "TOPSOIL". Origin uncertainty is indicated in the description by the characters (?), with the degree of uncertainty described (using the terms "probably" or "possibly" in the origin column, or at the end of the description).

Identification of minor components

Minor components are identified in the soil description immediately following the soil name. The minor component fraction is usually preceded with a term indicating the relative proportion of the component.

Minor Component Proportion Term	Relative Proportion	
	In Fine Grained Soil	In Coarse Grained Soil
With	All fractions: 15-30%	Clay/silt: 5-12% sand/gravel: 15-30%
Trace	All fractions: 0-15%	Clay/silt: 0-5% sand/gravel: 0-15%

The terms "with" and "trace" generally apply only to gravel or fine particle fractions. Where cobbles/boulders are encountered in minor proportions (generally less than about 12%) the term "occasional" may be used. This term describes the sporadic distribution of the material within the confines of the investigation excavation only, and there may be considerable variation in proportion over a wider area which is difficult to factually characterise due to the relative size of the particles and the investigation methods.

Soil Composition

Plasticity

Descriptive Term	Laboratory liquid limit range	
	Silt	Clay
Non-plastic materials	Not applicable	Not applicable
Low plasticity	≤50	≤35
Medium plasticity	Not applicable	>35 and ≤50
High plasticity	>50	>50

Note, Plasticity descriptions generally describe the plasticity behaviour of the whole of the fine grained soil, not individual fine grained fractions.

Grain Size

Type		Particle size (mm)
Gravel	Coarse	19 - 63
	Medium	6.7 - 19
	Fine	2.36 – 6.7
Sand	Coarse	0.6 - 2.36
	Medium	0.21 - 0.6
	Fine	0.075 - 0.21

Grading

Grading Term	Particle size (mm)
Well	A good representation of all particle sizes
Poorly	An excess or deficiency of particular sizes within the specified range
Uniformly	Essentially of one size
Gap	A deficiency of a particular size or size range within the total range

Note, AS1726-2017 provides terminology for additional attributes not listed here.

Soil Descriptions

Soil Condition

Moisture

The moisture condition of soils is assessed relative to the plastic limit for fine grained soils, while for coarse grained soils it is assessed based on the appearance and feel of the material. The moisture condition of a material is considered to be independent of stratigraphy (although commonly these are related), and this data is presented in its own column on logs.

Applicability	Term	Tactile Assessment	Abbreviation code
Fine	Dry of plastic limit	Hard and friable or powdery	w<PL
	Near plastic limit	Can be moulded	w=PL
	Wet of plastic limit	Water residue remains on hands when handling	w>PL
	Near liquid limit	"oozes" when agitated	w=LL
	Wet of liquid limit	"oozes"	w>LL
Coarse	Dry	Non-cohesive and free running	D
	Moist	Feels cool, darkened in colour, particles may stick together	M
	Wet	Feels cool, darkened in colour, particles may stick together, free water forms when handling	W

The abbreviation code NDF, meaning "not-assessable due to drilling fluid use" may also be used.

Note, observations relating to free ground water or drilling fluids are provided independent of soil moisture condition.

Consistency/Density/Compaction/Cementation/Extremely Weathered Material

These concepts give an indication of how the material may respond to applied forces (when considered in conjunction with other attributes of the soil). This behaviour can vary independent of the composition of the material, and on logs these are described in an independent column and are generally mutually exclusive (i.e it is inappropriate to describe both consistency and compaction at the same time). The method by which the behaviour is described depends on the behaviour model and other characteristics of the soil as follows:

- In fine grained soils, the "consistency" describes the ease with which the soil can be remoulded, and is generally correlated against the materials undrained shear strength;
- In granular materials, the relative density describes how tightly packed the particles are, and is generally correlated against the density index;
- In anthropogenically modified materials, the compaction of the material is described qualitatively;
- In cemented soils (both natural and anthropogenic), the cemented "strength" is described qualitatively, relative to the difficulty with which the material is disaggregated; and
- In soils of extremely weathered material origin, the engineering behaviour may be governed by relic rock features, and expected behaviour needs to be assessed based the overall material description.

Quantitative engineering performance of these materials may be determined by laboratory testing or estimated by correlated field tests (for example penetration or shear vane testing). In some cases, performance may be assessed by tactile or other subjective methods, in which case investigation logs will show the estimated value enclosed in round brackets, for example (VS).

Consistency (fine grained soils)

Consistency Term	Tactile Assessment	Undrained Shear Strength (kPa)	Abbreviation Code
Very soft	Extrudes between fingers when squeezed	<12	VS
Soft	Mouldable with light finger pressure	>12 - ≤25	S
Firm	Mouldable with strong finger pressure	>25 - ≤50	F
Stiff	Cannot be moulded by fingers	>50 - ≤100	St
Very stiff	Indented by thumbnail	>100 - ≤200	VSt
Hard	Indented by thumbnail with difficulty	>200	H
Friable	Easily crumbled or broken into small pieces by hand	-	Fr

Relative Density (coarse grained soils)

Relative Density Term	Density Index	Abbreviation Code
Very loose	<15	VL
Loose	>15 - ≤35	L
Medium dense	>35 - ≤65	MD
Dense	>65 - ≤85	D
Very dense	>85	VD

Note, tactile assessment of relative density is difficult, and generally requires penetration testing, hence a tactile assessment guide is not provided

Soil Descriptions

Compaction (anthropogenically modified soil)

Compaction Term	Abbreviation Code
Well compacted	WC
Poorly compacted	PC
Moderately compacted	MC
Variably compacted	VC

Cementation (natural and anthropogenic)

Cementation Term	Abbreviation Code
Moderately cemented	MOD
Weakly cemented	WEK

Extremely Weathered Material

AS1726-2017 considers weathered material to be soil if the unconfined compressive strength is less than 0.6 MPa (i.e. less than very low strength rock). These materials may be identified as "extremely weathered material" in reports and by the abbreviation code XWM on log sheets. This identification is not correlated to any specific qualitative or quantitative behaviour, and the engineering properties of this material must therefore be assessed according to engineering principles with reference to any relic rock structure, fabric, or texture described in the description.

Soil Origin

Term	Description	Abbreviation Code
Residual	Derived from in-situ weathering of the underlying rock	RS
Extremely weathered material	Formed from in-situ weathering of geological formations. Has strength of less than 'very low' as per as1726 but retains the structure or fabric of the parent rock.	XWM
Alluvial	Deposited by streams and rivers	ALV
Fluvial	Deposited by channel fill and overbank (natural levee, crevasse splay or flood basin)	FLV
Estuarine	Deposited in coastal estuaries	EST
Marine	Deposited in a marine environment	MAR
Lacustrine	Deposited in freshwater lakes	LAC
Aeolian	Carried and deposited by wind	AEO
Colluvial	Soil and rock debris transported down slopes by gravity	COL
Slopewash	Thin layers of soil and rock debris gradually and slowly deposited by gravity and possibly water	SW
Topsoil	Mantle of surface soil, often with high levels of organic material	TOP
Fill	Any material which has been moved by man	FILL
Littoral	Deposited on the lake or seashore	LIT
Unidentifiable	Not able to be identified	UID

Cobbles and Boulders

The presence of particles considered to be "oversize" may be described using one of the following strategies:

- Oversize encountered in a minor proportion (when considered relative to the wider area) are noted in the soil description; or
- Where a significant proportion of oversize is encountered, the cobbles/boulders are described independent of the soil description, in a similar manner to composite soils (described above) but qualified with "MIXTURE OF".

intentionally blank

Rock Strength

Rock strength is defined by the unconfined compressive strength, and it refers to the strength of the rock substance and not the strength of the overall rock mass, which may be considerably weaker due to defects.

The Point Load Strength Index $I_{s(50)}$ is commonly used to provide an estimate of the rock strength and site specific correlations should be developed to allow UCS values to be determined. The point load strength test procedure is described by Australian Standard AS4133.4.1-2007. The terms used to describe rock strength are as follows:

Strength Term	Unconfined Compressive Strength (MPa)	Point Load Index[1] $I_{s(50)}$ MPa	Abbreviation Code
Very low	0.6 - 2	0.03 - 0.1	VL
Low	2 - 6	0.1 - 0.3	L
Medium	6 - 20	0.3 - 1.0	M
High	20 - 60	1 - 3	H
Very high	60 - 200	3 - 10	VH
Extremely high	>200	>10	EH

[1] Rock strength classification is based on UCS. The UCS to $I_{s(50)}$ ratio varies significantly for different rock types and specific ratios may be required for each site. The point load Index ranges shown above are as suggested in AS1726 and should not be relied upon without supporting evidence.

The following abbreviation codes are used for soil layers or seams of material "within rock" but for which the equivalent UCS strength is less than 0.6 MPa.

Scenario	Abbreviation Code
The material encountered has an equivalent UCS strength of less than 0.6 MPa, and therefore is considered to be soil (as per Note 1 of Table 20 of AS 1726-2017). The properties of the material encountered over this interval are described in the "Description of Strata" and soil properties columns.	SOIL
The material encountered has an equivalent UCS strength of less than 0.6 MPa, and therefore is considered to be soil (as per Note 1 of Table 20 of AS 1726-2017). The prominence of the material is such that it can be considered to be a seam (as defined in Table 22 of AS1726-2017) and the properties of the material are described in the defect column.	SEAM

Degree of Weathering

The degree of weathering of rock is classified as follows:

Weathering Term	Description	Abbreviation Code
Residual Soil[1]	Material is weathered to such an extent that it has soil properties. Mass structure and material texture and fabric of original rock are no longer visible, but the soil has not been significantly transported.	RS
Extremely weathered[1]	Material is weathered to such an extent that it has soil properties. Mass structure and material texture and fabric of original rock are still visible	XW
Highly weathered	The whole of the rock material is discoloured, usually by iron staining or bleaching to the extent that the colour of the original rock is not recognisable. Rock strength is significantly changed by weathering. Some primary minerals have weathered to clay minerals. Porosity may be increased by leaching or may be decreased due to deposition of weathering products in pores.	HW
Moderately weathered	The whole of the rock material is discoloured, usually by iron staining or bleaching to the extent that the colour of the original rock is not recognisable but shows little or no change of strength from fresh rock.	MW
Slightly weathered	Rock is partially discoloured with staining or bleaching along joints but shows little or no change of strength from fresh rock.	SW
Fresh	No signs of decomposition or staining.	FR
Note: If HW and MW cannot be differentiated use DW (see below)		
Distinctly weathered	Rock strength usually changed by weathering. The rock may be highly discoloured, usually by iron staining. Porosity may be increased by leaching or may be decreased due to deposition of weathered products in pores.	DW

[1] The parent rock type, of which the residual/extremely weathered material is a derivative, will be stated in the description (where discernible).

Degree of Alteration

The degree of alteration of the rock material (physical or chemical changes caused by hot gasses or liquids at depth) is classified as follows:

Term	Description	Abbreviation Code
Extremely altered	Material is altered to such an extent that it has soil properties. Mass structure and material texture and fabric of original rock are still visible.	XA
Highly altered	The whole of the rock material is discoloured, usually by staining or bleaching to the extent that the colour of the original rock is not recognisable. Rock strength is changed by alteration. Some primary minerals are altered to clay minerals. Porosity may be increased by leaching or may be decreased due to precipitation of secondary materials in pores.	HA
Moderately altered	The whole of the rock material is discoloured, usually by staining or bleaching to the extent that the colour of the original rock is not recognisable but shows little or no change of strength from fresh rock.	MA
Slightly altered	Rock is slightly discoloured but shows little or no change of strength from fresh rock	SA
Note: If HA and MA cannot be differentiated use DA (see below)		
Distinctly altered	Rock strength usually changed by alteration. The rock may be highly discoloured, usually by staining or bleaching. Porosity may be increased by leaching or may be decreased due to precipitation of secondary minerals in pores.	DA

Degree of Fracturing

The following descriptive classification apply to the spacing of natural occurring fractures in the rock mass. It includes bedding plane partings, joints and other defects, but excludes drilling breaks. These terms are generally not required on investigation logs where fracture spacing is presented as a histogram, and where used are presented in an unabbreviated format.

Term	Description
Fragmented	Fragments of <20 mm
Highly Fractured	Core lengths of 20-40 mm with occasional fragments
Fractured	Core lengths of 30-100 mm with occasional shorter and longer sections
Slightly Fractured	Core lengths of 300 mm or longer with occasional sections of 100-300 mm
Unbroken	Core contains very few fractures

Rock Quality Designation

The quality of the cored rock can be measured using the Rock Quality Designation (RQD) index, defined as:

$$\text{RQD \%} = \frac{\text{cumulative length of 'sound' core sections} > \text{100 mm long}}{\text{total drilled length of section being assessed}}$$

where 'sound' rock is assessed to be rock of low strength or stronger. The RQD applies only to natural fractures. If the core is broken by drilling or handling (i.e., drilling breaks) then the broken pieces are fitted back together and are not included in the calculation of RQD.

Stratification Spacing

These terms may be used to describe the spacing of bedding partings in sedimentary rocks. Where used, these terms are generally presented in an unabbreviated format

Term	Separation of Stratification Planes
Thinly laminated	< 6 mm
Laminated	6 mm to 20 mm
Very thinly bedded	20 mm to 60 mm
Thinly bedded	60 mm to 0.2 m
Medium bedded	0.2 m to 0.6 m
Thickly bedded	0.6 m to 2 m
Very thickly bedded	> 2 m

Rock Descriptions

Defect Descriptions

Defect Type

Term	Abbreviation Code
Bedding plane	B
Cleavage	CL
Crushed seam	CS
Crushed zone	CZ
Drilling break	DB
Decomposed seam	DS
Drill lift	DL
Extremely Weathered seam	EW
Fault	F
Fracture	FC
Fragmented	FG
Handling break	HB
Infilled seam	IS
Joint	JT
Lamination	LAM
Shear seam	SS
Shear zone	SZ
Vein	VN
Mechanical break	MB
Parting	P
Sheared Surface	S

Rock Defect Orientation

Term	Abbreviation Code
Horizontal	H
Vertical	V
Sub-horizontal	SH
Sub-vertical	SV

Rock Defect Coating

Term	Abbreviation Code
Clean	CN
Coating	CT
Healed	HE
Infilled	INF
Stained	SN
Tight	TI
Veneer	VNR

Rock Defect Infill

Term	Abbreviation Code
Calcite	CA
Carbonaceous	CBS
Clay	CLAY
Iron oxide	FE
Manganese	MN
Pyrite	Py
Secondary material	MS
Silt	M
Quartz	Qz
Unidentified material	MU

Rock Defect Shape/Planarity

Term	Abbreviation Code
Curved	CU
Discontinuous	DIS
Irregular	IR
Planar	PR
Stepped	ST
Undulating	UN

Rock Defect Roughness

Term	Abbreviation Code
Polished	PO
Rough	RF
Smooth	SM
Slickensided	SL
Very rough	VR

Defect Orientation
The inclination of defects is always measured from the perpendicular to the core axis

intentionally blank

Sampling and Testing

A record of samples retained, and field testing performed is usually shown on a Douglas Partners' log with samples appearing to the left of a depth scale, and selected field and laboratory testing (including results, where relevant) appearing to the right of the scale, as illustrated below:

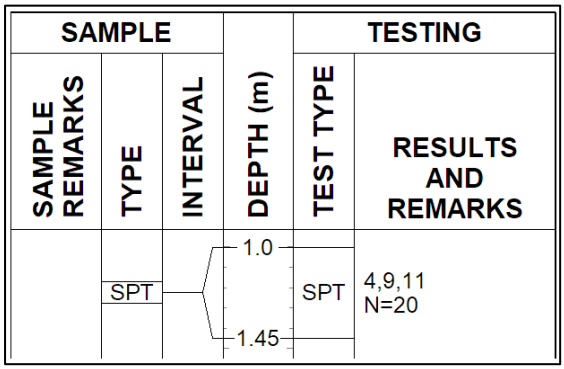

Sampling

The type or intended purpose for which a sample was taken is indicated by the following abbreviation codes.

Sample Type	Code
Auger sample	A
Acid Sulfate sample	ASS
Bulk sample	B
Core sample	C
Disturbed sample	D
Environmental sample	ES
Gas sample	G
Piston sample	P
Sample from SPT test	SPT
Undisturbed tube sample	U[1]
Water sample	W
Material Sample	MT
Core sample for unconfined compressive strength testing	UCS

[1] – numeric suffixes indicate tube diameter/width in mm

The above codes only indicate that a sample was retained, and not that testing was scheduled or performed.

Field and Laboratory Testing

A record that field and laboratory testing was performed is indicated by the following abbreviation codes.

Test Type	Code
Pocket penetrometer (kPa)	PP
Photo ionisation detector (ppm)	PID
Standard Penetration Test x/y = x blows for y mm penetration HB = hammer bouncing HW = fell under weight of hammer	SPT
Shear vane (kPa)	V
Unconfined compressive strength, (MPa)	UCS

Field and laboratory testing (continued)

Test Type	Code
Point load test, (MPa), axial (A), diametric (D), irregular (I)	PLT(_)
Dynamic cone penetrometer, followed by blow count penetration increment in mm (cone tip, generally in accordance with AS1289.6.3.2)	DCP/150
Perth sand penetrometer, followed by blow count penetration increment in mm (flat tip, generally in accordance with AS1289.6.3.3)	PSP/150

Groundwater Observations

▷	seepage/inflow
▽	standing or observed water level
NFGWO	no free groundwater observed
OBS	observations obscured by drilling fluids

Drilling or Excavation Methods/Tools

The drilling/excavation methods used to perform the investigation may be shown either in a dedicated column down the left-hand edge of the log, or stated in the log footer. In some circumstances abbreviation codes may be used.

Method	Abbreviation Code
Direct Push	DP
Solid flight auger. Suffixes: /T = tungsten carbide tip, /V = v-shaped tip	AD[1]
Air Track	AT
Diatube	DT[1]
Hand auger	HA[1]
Hand tools (unspecified)	HAND
Existing exposure	X
Hollow flight auger	HSA[1]
HQ coring	HQ3
HMLC series coring	HMLC
NMLC series coring	NMLC
NQ coring	NQ3
PQ coring	PQ3
Predrilled	PD
Push tube	PT[1]
Ripping tyne/ripper	R
Rock roller	RR[1]
Rock breaker/hydraulic hammer	EH
Sonic drilling	SON[1]
Mud/blade bucket	MB[1]
Toothed bucket	TB[1]
Vibrocore	VC[1]
Vacuum excavation	VE
Wash bore (unspecified bit type)	WB[1]

[1] – numeric suffixes indicate tool diameter/width in mm

FOUNDATION MAINTENANCE AND FOOTING PERFORMANCE

Understanding and preventing soil-related building movement

This Building Technology Resource is designed to identify causes of soil-related building movement, and to suggest methods of prevention of resultant cracking.

Buildings can and often do move. This movement can be up, down, lateral or rotational. The fundamental cause of movement in buildings can usually be related to one or more problems in the foundation soil. It is important for the home owner to identify the soil type in order to ascertain the measures that should be put in place in order to ensure that problems in the foundation soil can be prevented, thus protecting against building movement.

SOIL TYPES

The types of soils usually present under the topsoil in land zoned for residential buildings can be split into two approximate groups – granular and clay. Quite often, foundation soil is a mixture of both types. The general problems associated with soils having granular content are usually caused by erosion. Clay soils are subject to saturation and swell/shrink problems.

Classifications for a given area can generally be obtained by application to the local authority, but these are sometimes unreliable and if there is doubt, a geotechnical report should be commissioned. As most buildings suffering movement problems are founded on clay soils, there is an emphasis on classification of soils according to the amount of swell and shrinkage they experience with variations of water content. Table 1 below is a reproduction of Table 2.1 from Australian Standard AS 2870-2011, Residential slabs and footings.

CAUSES OF MOVEMENT

SETTLEMENT DUE TO CONSTRUCTION

There are two types of settlement that occur as a result of construction:

- Immediate settlement occurs when a building is first placed on its foundation soil, as a result of compaction of the soil under the weight of the structure. The cohesive quality of clay soil mitigates against this, but granular (particularly sandy) soil is susceptible.
- Consolidation settlement is a feature of clay soil and may take place because of the expulsion of moisture from the soil or because of the soil's lack of resistance to local compressive or shear stresses. This will usually take place during the first few months after construction but has been known to take many years in exceptional cases.

These problems may be the province of the builder and should be taken into consideration as part of the preparation of the site for construction.

EROSION

All soils are prone to erosion, but sandy soil is particularly susceptible to being washed away. Even clay with a sand component of say 10% or more can suffer from erosion.

SATURATION

This is particularly a problem in clay soils. Saturation creates a bog-like suspension of the soil that causes it to lose virtually all of its bearing capacity. To a lesser degree, sand is affected by saturation because saturated sand may undergo a reduction in volume, particularly imported sand fill for bedding and blinding layers. However, this usually occurs as immediate settlement and should normally be the province of the builder.

SEASONAL SWELLING AND SHRINKAGE OF SOIL

All clays react to the presence of water by slowly absorbing it, making the soil increase in volume (see table below, from AS 2870). The degree of increase varies considerably between different clays, as does the degree of decrease during the subsequent drying out caused by fair weather periods. Because of the low absorption and expulsion rate, this phenomenon will not usually be noticeable unless there are prolonged rainy or dry periods, usually of weeks or months, depending on the land and soil characteristics.

The swelling of soil creates an upward force on the footings of the building, and shrinkage creates subsidence that takes away the support needed by the footing to retain equilibrium.

SHEAR FAILURE

This phenomenon occurs when the foundation soil does not have sufficient strength to support the weight of the footing. There are two major post-construction causes:

- Significant load increase.
- Reduction of lateral support of the soil under the footing due to erosion or excavation.

In clay soil, shear failure can be caused by saturation of the soil adjacent to or under the footing.

TREE ROOT GROWTH

Trees and shrubs that are allowed to grow in the vicinity of footings can cause foundation soil movement in two ways:

- Roots that grow under footings may increase in cross-sectional size, exerting upward pressure on footings.

TABLE 1. GENERAL DEFINITIONS OF SITE CLASSES.

Class	Foundation
A	Most sand and rock sites with little or no ground movement from moisture changes
S	Slightly reactive clay sites, which may experience only slight ground movement from moisture changes
M	Moderately reactive clay or silt sites, which may experience moderate ground movement from moisture changes
H1	Highly reactive clay sites, which may experience high ground movement from moisture changes
H2	Highly reactive clay sites, which may experience very high ground movement from moisture changes
F	Extremely reactive sites, which may experience extreme ground movement from moisture changes

Source: Reproduced with the permission of Standards Australia Limited © 2011. Copyright in AS 2870-2011 Residential slabs and footings vests in Standards Australia Limited.

© CSIRO 2021

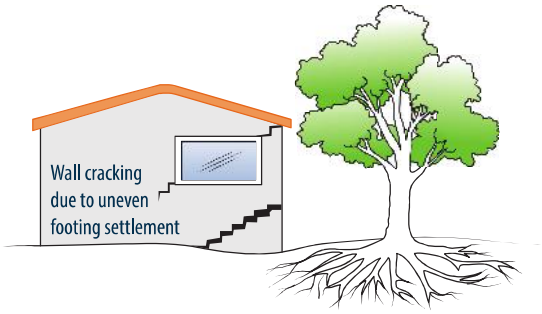

FIGURE 1 Trees can cause shrinkage and damage.

- Roots in the vicinity of footings will absorb much of the moisture in the foundation soil, causing shrinkage or subsidence.

UNEVENNESS OF MOVEMENT

The types of ground movement described above usually occur unevenly throughout the building's foundation soil. Settlement due to construction tends to be uneven because of:

- Differing compaction of foundation soil prior to construction.
- Differing moisture content of foundation soil prior to construction.

Movement due to non-construction causes is usually more uneven still. Erosion can undermine a footing that traverses the flow or can create the conditions for shear failure by eroding soil adjacent to a footing that runs in the same direction as the flow.

Saturation of clay foundation soil may occur where subfloor walls create a dam that makes water pond. It can also occur wherever there is a source of water near footings in clay soil. This leads to a severe reduction in the strength of the soil which may create local shear failure.

Seasonal swelling and shrinkage of clay soil affects the perimeter of the building first, then gradually spreads to the interior through absorption. The swelling process will usually begin at the uphill extreme of the building, or on the weather side where the land is flat. Shrinkage usually begins on the side of the building where the sun's heat is greatest.

EFFECTS OF UNEVEN SOIL MOVEMENT ON STRUCTURES

EROSION AND SATURATION

Erosion removes the support from under footings, tending to create subsidence of the part of the structure under which it occurs. Brickwork walls will resist the stress created by this removal of support by bridging the gap or cantilevering until the bricks or the mortar bedding fail. Older masonry has little resistance. Evidence of failure varies according to circumstances and symptoms may include:

- Step cracking in the mortar beds in the body of the wall or above/below openings such as doors or windows.
- Vertical cracking in the bricks (usually but not necessarily in line with the vertical beds or perpends).

Isolated piers affected by erosion or saturation of foundations will eventually lose contact with the bearers they support and may tilt or fall over. The floors that have lost this support will become bouncy, sometimes rattling ornaments etc.

SEASONAL SWELLING/SHRINKAGE IN CLAY

Swelling foundation soil due to rainy periods first lifts the most exposed extremities of the footing system, then the remainder of the perimeter footings while gradually permeating inside the building footprint to lift internal footings. This swelling first tends to create a dish effect, because the external footings are pushed higher than the internal ones.

The first noticeable symptom may be that the floor appears slightly dished. This is often accompanied by some doors binding on the floor or the door head, together with some cracking of cornice mitres. In buildings with timber flooring supported by bearers and joists, the floor can be bouncy. Externally there may be visible dishing of the hip or ridge lines.

As the moisture absorption process completes its journey to the innermost areas of the building, the internal footings will rise. If the spread of moisture is roughly even, it may be that the symptoms will temporarily disappear, but it is more likely that swelling will be uneven, creating a difference rather than a disappearance in symptoms. In buildings with timber flooring supported by bearers and joists, the isolated piers will rise more easily than the strip footings or piers under walls, creating noticeable doming of flooring.

As the weather pattern changes and the soil begins to dry out, the external footings will be first affected, beginning with the locations where the sun's effect is strongest. This has the effect of lowering the external footings. The doming is accentuated, and cracking reduces or disappears where it occurred because of dishing, but other cracks open up. The roof lines may become convex.

Doming and dishing are also affected by weather in other ways. In areas where warm, wet summers and cooler dry winters prevail, water migration tends to be toward the interior and doming will be accentuated, whereas where summers are dry, and winters are cold and wet, migration tends to be toward the exterior and the underlying propensity is toward dishing.

MOVEMENT CAUSED BY TREE ROOTS

In general, growing roots will exert an upward pressure on footings, whereas soil subject to drying because of tree or shrub roots will tend to remove support from under footings by inducing shrinkage.

COMPLICATIONS CAUSED BY THE STRUCTURE ITSELF

Most forces that the soil causes to be exerted on structures are vertical – i.e. either up or down. However, because these forces are seldom spread evenly around the footings, and because the building resists uneven movement because of its rigidity, forces are exerted from one part of the building to another. The net result of all these forces is usually rotational. This resultant force often complicates the diagnosis because the visible symptoms do not simply reflect the original cause. A common symptom is binding of doors on the vertical member of the frame.

EFFECTS ON FULL MASONRY STRUCTURES

Brickwork will resist cracking where it can. It will attempt to span areas that lose support because of subsided foundations or raised points. It is therefore usual to see cracking at weak points, such as openings for windows or doors.

In the event of construction settlement, cracking will usually remain unchanged after the process of settlement has ceased.

With local shear or erosion, cracking will usually continue to develop until the original cause has been remedied, or until the subsidence has completely neutralised the affected portion of footing and the structure has stabilised on other footings that remain effective.

In the case of swell/shrink effects, the brickwork will in some cases return to its original position after completion of a cycle, however it is more likely that the rotational effect will not be exactly reversed, and it is also usual that brickwork will settle in its new position and will resist the forces trying to return it to its original position. This means that in a case where swelling takes place after construction and cracking occurs, the cracking is likely to at least partly remain after the shrink segment of the cycle is complete. Thus, each time the cycle is repeated, the likelihood is that the cracking will become wider until the sections of brickwork become virtually independent.

With repeated cycles, once the cracking is established, if there is no other complication, it is normal for the incidence of cracking to stabilise, as the building has the articulation it needs to cope with the problem. This is by no means always the case, however, and monitoring of cracks in walls and floors should always be treated seriously.

Upheaval caused by growth of tree roots under footings is not a simple vertical shear stress. There is a tendency for the root to also

© CSIRO 2021

exert lateral forces that attempt to separate sections of brickwork after initial cracking has occurred.

The normal structural arrangement is that the inner leaf of brickwork in the external walls and at least some of the internal walls (depending on the roof type) comprise the load-bearing structure on which any upper floors, ceilings and the roof are supported. In these cases, it is internally visible cracking that should be the main focus of attention, however there are a few examples of dwellings whose external leaf of masonry plays some supporting role, so this should be checked if there is any doubt. In any case, externally visible cracking is important as a guide to stresses on the structure generally, and it should also be remembered that the external walls must be capable of supporting themselves.

EFFECTS ON FRAMED STRUCTURES

Timber or steel framed buildings are less likely to exhibit cracking due to swell/shrink than masonry buildings because of their flexibility. Also, the doming/dishing effects tend to be lower because of the lighter weight of walls. The main risks to framed buildings are encountered because of the isolated pier footings used under walls. Where erosion or saturation causes a footing to fall away, this can double the span which a wall must bridge. This additional stress can create cracking in wall linings, particularly where there is a weak point in the structure caused by a door or window opening. It is, however, unlikely that framed structures will be so stressed as to suffer serious damage without first exhibiting some or all of the above symptoms for a considerable period. The same warning period should apply in the case of upheaval. It should be noted, however, that where framed buildings are supported by strip footings there is only one leaf of brickwork and therefore the externally visible walls are the supporting structure for the building. In this case, the subfloor masonry walls can be expected to behave as full brickwork walls.

EFFECTS ON BRICK VENEER STRUCTURES

Because the load-bearing structure of a brick veneer building is the frame that makes up the interior leaf of the external walls plus perhaps the internal walls, depending on the type of roof, the building can be expected to behave as a framed structure, except that the external masonry will behave in a similar way to the external leaf of a full masonry structure.

WATER SERVICE AND DRAINAGE

Where a water service pipe, a sewer or stormwater drainage pipe is in the vicinity of a building, a water leak can cause erosion, swelling or saturation of susceptible soil. Even a minuscule leak can be enough to saturate a clay foundation. A leaking tap near a building can have the same effect. In addition, trenches containing pipes can become watercourses even though backfilled, particularly where broken rubble is used as fill. Water that runs along these trenches can be responsible for serious erosion, interstrata seepage into subfloor areas and saturation.

Pipe leakage and trench water flows also encourage tree and shrub roots to the source of water, complicating and exacerbating the problem. Poor roof plumbing can result in large volumes of rainwater being concentrated in a small area of soil:

- Incorrect falls in roof guttering may result in overflows, as may gutters blocked with leaves etc.
- Corroded guttering or downpipes can spill water to ground.
- Downpipes not positively connected to a proper stormwater collection system will direct a concentration of water to soil that is directly adjacent to footings, sometimes causing large-scale problems such as erosion, saturation and migration of water under the building.

SERIOUSNESS OF CRACKING

In general, most cracking found in masonry walls is a cosmetic nuisance only and can be kept in repair or even ignored. Table 2 below is a reproduction of Table C1 of AS 2870-2011.

AS 2870-2011 also publishes figures relating to cracking in concrete floors, however because wall cracking will usually reach the critical point significantly earlier than cracking in slabs, this table is not reproduced here.

PREVENTION AND CURE

PLUMBING

Where building movement is caused by water service, roof plumbing, sewer or stormwater failure, the remedy is to repair the problem. It is prudent, however, to consider also rerouting pipes away from the building where possible and relocating taps to positions where any leakage will not direct water to the building vicinity. Even where gully traps are present, there is sometimes sufficient spill to create erosion or saturation, particularly in modern installations using smaller diameter PVC fixtures. Indeed, some gully traps are not situated directly under the taps that are installed to charge them, with the result that water from the tap may enter the backfilled trench that houses the sewer piping. If the trench has been poorly backfilled, the water will either pond or flow along the bottom of the trench. As these trenches usually run alongside the footings and can be at a similar depth, it is not hard to see how any water that is thus directed into a trench can easily affect the foundation's ability to support footings or even gain entry to the subfloor area.

GROUND DRAINAGE

In all soils there is the capacity for water to travel on the surface and below it. Surface water flows can be established by inspection during and after heavy or prolonged rain. If necessary, a grated drain system connected to the stormwater collection system is usually an easy solution.

It is, however, sometimes necessary when attempting to prevent water migration that testing be carried out to establish watertable height and subsoil water flows. This subject may be regarded as an area for an expert consultant.

PROTECTION OF THE BUILDING PERIMETER

It is essential to remember that the soil that affects footings extends well beyond the actual building line. Watering of garden plants, shrubs and trees causes some of the most serious water problems.

For this reason, particularly where problems exist or are likely to occur, it is recommended that an apron of paving be installed around as much of the building perimeter as necessary. This paving should extend outwards a minimum of 900 mm (more in highly reactive soil) and should have a minimum fall away from the building of 1:60. The finished paving should be no less than 100 mm below brick vent bases.

It is prudent to relocate drainage pipes away from this paving, if possible, to avoid complications from future leakage. If this is not practical, earthenware pipes should be replaced by PVC and backfilling should be of the same soil type as the surrounding soil and compacted to the same density.

Except in areas where freezing of water is an issue, it is wise to remove taps in the building area and relocate them well away from the building – preferably not uphill.

It may be desirable to install a grated drain at the outside edge of the paving on the uphill side of the building. If subsoil drainage is needed this can be installed under the surface drain.

CONDENSATION

In buildings with a subfloor void, such as where bearers and joists support flooring, insufficient ventilation creates ideal conditions for condensation, particularly where there is little clearance between the floor and the ground. Condensation adds to the moisture already present in the subfloor and significantly slows the process of drying out. Installation of an adequate subfloor ventilation system, either natural or mechanical, is desirable.

© CSIRO 2021

TABLE 2. CLASSIFICATION OF DAMAGE WITH REFERENCE TO WALLS.

Description of typical damage and required repair	Approximate crack width limit	Damage category
Hairline cracks	<0.1 mm	0 – Negligible
Fine cracks which do not need repair	<1 mm	1 – Very Slight
Cracks noticeable but easily filled. Doors and windows stick slightly.	<5 mm	2 – Slight
Cracks can be repaired and possibly a small amount of wall will need to be replaced. Doors and windows stick. Service pipes can fracture. Weathertightness often impaired.	5–15 mm (or a number of cracks 3 mm or more in one group)	3 – Moderate
Extensive repair work involving breaking-out and replacing sections of walls, especially over doors and windows. Window and door frames distort. Walls lean or bulge noticeably, some loss of bearing in beams. Service pipes disrupted.	15–25 mm but also depends on number of cracks	4 – Severe

Source: Reproduced with the permission of Standards Australia Limited © 2011. Copyright in AS 2870-2011 Residential slabs and footings vests in Standards Australia Limited.

Warning: Although this Building Technology Resource deals with cracking in buildings, it should be said that subfloor moisture can result in the development of other problems, notably:

- Water that is transmitted into masonry, metal or timber building elements causes damage and/or decay to those elements.
- High subfloor humidity and moisture content create an ideal environment for various pests, including termites and spiders, and mould.
- Where high moisture levels are transmitted to the flooring and walls, an increase in the dust mite count can ensue within the living areas. Dust mites, as well as dampness in general, can be a health hazard to inhabitants, particularly those who are abnormally susceptible to respiratory ailments.

THE GARDEN

The ideal vegetation layout is to have lawn or plants that require only light watering immediately adjacent to the drainage or paving edge, then more demanding plants, shrubs and trees spread out in that order.

Overwatering due to misuse of automatic watering systems is a common cause of saturation and water migration under footings. If it is necessary to use these systems, it is important to remove garden beds to a completely safe distance from buildings.

EXISTING TREES

Where a tree is causing a problem of soil drying or there is the existence or threat of upheaval of footings, if the offending roots are subsidiary and their removal will not significantly damage the tree, they should be severed and a concrete or metal barrier placed vertically in the soil to prevent future root growth in the direction of the building. If it is not possible to remove the relevant roots without damage to the tree, an application to remove the tree should be made to the local authority. A prudent plan is to transplant likely offenders before they become a problem.

INFORMATION ON TREES, PLANTS AND SHRUBS

State departments overseeing agriculture can give information regarding root patterns, volume of water needed and safe distance from buildings of most species. Botanic gardens are also sources of information.

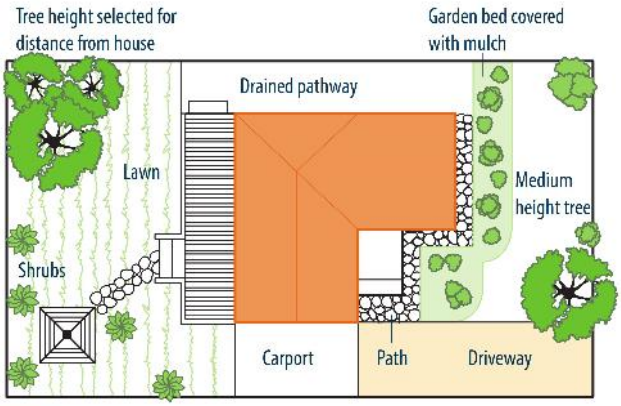

FIGURE 2 Gardens for a reactive site.

EXCAVATION

Excavation around footings must be properly engineered. Soil supporting footings can only be safely excavated at an angle that allows the soil under the footing to remain stable. This angle is called the angle of repose (or friction) and varies significantly between soil types and conditions. Removal of soil within the angle of repose will cause subsidence.

REMEDIATION

Where erosion has occurred that has washed away soil adjacent to footings, soil of the same classification should be introduced and compacted to the same density. Where footings have been undermined, augmentation or other specialist work may be required. Remediation of footings and foundations is generally the realm of a specialist consultant.

Where isolated footings rise and fall because of swell/shrink effect, the home owner may be tempted to alleviate floor bounce by filling the gap that has appeared between the bearer and the pier with blocking. The danger here is that when the next swell segment of the cycle occurs, the extra blocking will push the floor up into an accentuated dome and may also cause local shear failure in the soil. If it is necessary to use blocking, it should be by a pair of fine wedges and monitoring should be carried out fortnightly.

CSIROPUBLISHING

1300 788 000 | +61 3 9545 8400 | publishing.sales@csiro.au | www.publish.csiro.au
For information about CSIRO testing services visit www.csiro.au/en/work-with-us/services
ISBN 9781486312962 (print)/9781486312979 (digital) © CSIRO 2021
(replaces Building Technology File 18, 18-2011 and Information Sheet 10/91)
Unauthorised copying of this material is prohibited.

IMPORTANT DISCLAIMER: This information is prepared for Australia and general in nature. It may be incomplete or inapplicable in some cases.
Laws and regulations may vary in different places. Seek specialist advice for your particular circumstances.
To the extent permitted by law, CSIRO excludes all liability to any person for any loss, damage, cost or other consequence that may result from using this information.

© CSIRO 2021

TERMS AND CONDITIONS: BUILDING TECHNOLOGY RESOURCES

CONDITIONS OF USE

This publication may only be used in accordance with the following terms:

1. CSIRO (which for the purposes of these terms includes CSIRO Publishing) and its licensees own the copyright in the publication and will retain all rights, title and interest in and to the publication.
2. Once downloaded, the downloaded PDF publication may be provided by the user that initially downloads the PDF publication to other users by electronic mail once for each user licence purchased subject and pursuant to paragraph 4 below. The publication may not otherwise be copied or circulated electronically, including, for the avoidance of doubt, by electronic mail, even for internal use.
3. The downloaded publication may be printed, but the number of copies that may be printed is limited to the number of user licences purchased. That is, each user may print one (1) copy of the publication only.
4. The number of user licences purchased is shown on the tax invoice provided at the time of purchase. For the avoidance of doubt, the user that initially downloads the PDF publication shall be taken to be one (1) user. For example, if two (2) user licences are purchased, the publication may only be shared once to one (1) other user and printed once by each user (i.e. a maximum of two (2) hardcopy versions of the publication may be printed).
5. The publication (whether in PDF or printed format) may only be used for personal, internal, non-commercial purposes.
6. The publication and all its content is subject to copyright and unauthorised copying is prohibited.
7. Reproduction, renting, leasing, re-selling, sub-licensing, assignment or any supply of the publication, in print or electronically, is not permitted.
8. Retransmission, caching, networking or posting of the downloaded PDF publication is strictly prohibited.
9. Content may not be extracted for any reason and derivative works based on the publication are not permitted. The publication and any of its content may not be copied, reformatted, adapted, modified, translated, merged, reverse engineered, decompiled, dissembled or changed in any way and otherwise must not be used in a manner that would infringe the copyrights therein.
10. Ownership, copyright, trade mark, confidentiality or other marks or legends (including any digital watermark or similar) on or in the publication must not be removed, altered or obscured.
11. The security of the publication mut be protected at all times.
12. CSIRO will not provide any updating service for the publication. That is, purchasing the publication only entitles access to the publication as current at the date of purchase and does not entitle access to any amended, changed or updated version of the publication. CSIRO is not obliged to notify purchasers or users if the publication is amended, changed, updated or withdrawn after purchase.
13. If you purchased this publication via the CSIRO Publishing website, the PDF publication will remain available on the CSIRO Publishing website for 48 hours after purchasing. In the event of a communication problem during downloading, re-download the publication within 48 hours of purchase. After that time, the publication will no longer be accessible via the CSIRO Publishing website.
14. The right to use this publication pursuant to these terms will continue indefinitely, but will terminate automatically and without notice for any failure to comply with these terms. Upon termination all copies of the publication must be deleted and/or destroyed.
15. CSIRO nor any other person, to the extent permitted by law, has made or makes any representation or warranty of any kind in relation to the publication.
16. Without limiting the foregoing in any way, the information contained in the publication is general in nature. It may be incomplete or inapplicable in some cases. Laws and regulations may vary in different places. Seek specialist advice for your particular circumstances.
17. To the extent permitted by law, CSIRO excludes all liability to any person for any loss, damage, cost or other consequence that may result from using this publication and the information in it.
18. For reproduction of the publication or any portions or other use outside the circumstances set out in these terms, prior written permission of CSIRO must be sought. Please contact: publishing@csiro.au

TEST PIT LOG

CLIENT: Capital Estate Developments Pty Ltd
PROJECT: Proposed Residential Subdivision
LOCATION: Stage 7 Denman North Estate, Denman Prospect

SURFACE LEVEL: 584 AHD
COORDINATE: E:200940, N:602825
DATUM/GRID: ACT Stromlo
DIP/AZIMUTH: 90°/---°

LOCATION ID: 80
PROJECT No: 88231.60
DATE: 06/08/24
SHEET: 1 of 1

CONDITIONS ENCOUNTERED								SAMPLE				TESTING AND REMARKS	
GROUNDWATER	RL (m)	DEPTH (m)	DESCRIPTION OF STRATA	GRAPHIC	ORIGIN(#)	CONSIS.(*) / DENSITY.(*)	MOISTURE	REMARKS	TYPE	INTERVAL	DEPTH (m)	TEST TYPE	RESULTS AND REMARKS
06/08/24 No free groundwater observed			FILL / Silty Sandy CLAY (CL): brown; low plasticity; fine to coarse sand.		FILL	NA	w<PL						
		0.20	FILL / Sandy Gravelly CLAY (CL), trace silt: brown; low plasticity; fine to coarse sand; fine to coarse gravel.										
	583								D		0.50		
			0.80m-0.90m: pocket of high plasticity clay		FILL	(VSt) to (H)	w<PL						
									D		0.85		
		1							D		1.00		
	582		Test Pit discontinued at 1.30m depth. Slow progress in hard gravelly fill.										

NOTES: (#) Soil origin is "probable" unless otherwise stated. (*) Consistency/Relative density shading is for visual reference only - no correlation between cohesive and granular materials is implied.

PLANT: CAT 306 CR mini excavator
OPERATOR: Bingley Electrical Pty Ltd
LOGGED: Miller
METHOD: 300mm wide bucket
REMARKS: Surface levels and coordinates are approximate only and must not be relied upon.

Refer to explanatory notes for symbol and abbreviation definitions

Douglas PARTNERS

Generated with CORE-GS by Geroc - Soil Log

TEST PIT LOG

CLIENT: Capital Estate Developments Pty Ltd
PROJECT: Proposed Residential Subdivision
LOCATION: Stage 7 Denman North Estate, Denman Prospect

SURFACE LEVEL: 584 AHD
COORDINATE: E:200926, N:602844
DATUM/GRID: ACT Stromlo
DIP/AZIMUTH: 90°/---°

LOCATION ID: 81
PROJECT No: 88231.60
DATE: 06/08/24
SHEET: 1 of 1

CONDITIONS ENCOUNTERED								SAMPLE				TESTING AND REMARKS	
GROUNDWATER	RL (m)	DEPTH (m)	DESCRIPTION OF STRATA	GRAPHIC	ORIGIN(#)	CONSIS.(*) DENSITY.(*)	MOISTURE	REMARKS	TYPE	INTERVAL	DEPTH (m)	TEST TYPE	RESULTS AND REMARKS
06/08/24 No free groundwater observed			TOPSOIL / Silty Sandy CLAY (CL): brown; low plasticity; fine to coarse sand. FILL.		TOP and FILL	NA	w<PL						
		0.20	FILL / Sandy Gravelly CLAY (CL), trace silt, trace cobbles: brown; low plasticity; fine to coarse sand; fine to coarse gravel.		FILL	(VSt) to (H)	w<PL		D		0.50		
	583												
		1							D		1.00		
		1.10	FILL / Sandy CLAY (CL-CI): grey brown; low to medium plasticity; fine to coarse sand; pockets of high plasticity clay.		FILL	(VSt)	w<PL to w=PL		D		1.30		
	582												
			Test Pit discontinued at 1.70m depth. Limit of investigation.										

NOTES: (#) Soil origin is "probable" unless otherwise stated. (*) Consistency/Relative density shading is for visual reference only - no correlation between cohesive and granular materials is implied.

PLANT: CAT 306 CR mini excavator
OPERATOR: Bingley Electrical Pty Ltd
LOGGED: Miller
METHOD: 300mm wide bucket
REMARKS: Surface levels and coordinates are approximate only and must not be relied upon.

Refer to explanatory notes for symbol and abbreviation definitions

Douglas PARTNERS

Generated with CORE-GS by Geroc - Soil Log

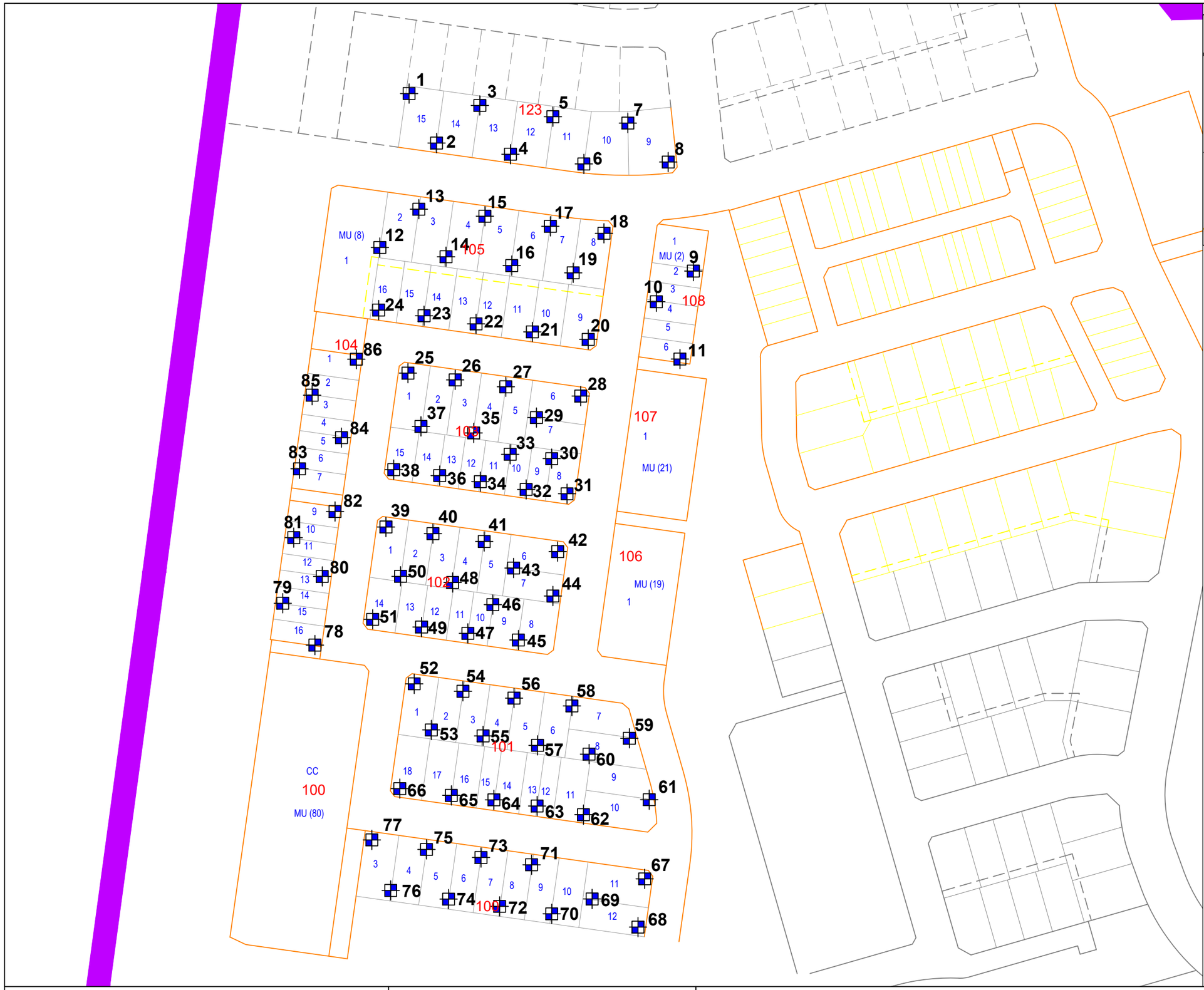

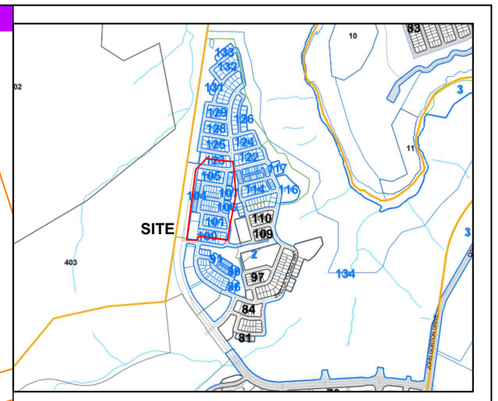

Locality Plan

LEGEND

Test Pit Location

0 17.5 35 52.5 70 87.5

1:1750 @ A3

NOTE: Base drawing from Huon
(Drawing Depth Range Plot, dated 8 June 2023)

Douglas PARTNERS

GROUNDED EXPERTISE

CLIENT: Capital Estate Developments Pty Ltd	TITLE: **Test Location Plan**	PROJECT No: 88231.60	
OFFICE: Canberra / DRAWN BY: FM	**Proposed Residential Subdivision**	DRAWING No: 1	
SCALE: As Shown / DATE: 28.05.2024	**Stage 7 Denman North Estate, Denman Prospect**	REVISION: 0	

SITE CLASSIFICATION REPORT SUMMARY

BLOCK:	**12**	**SECTION:**	**104**	**SUBURB:**	**Denman Prospect**
JOB No:	**88231.60**			**DATE:**	**August 2024**
CLIENT:	**Capital Estate Developments Pty Ltd**			**REF:**	**R.068.Rev0**

Classification Procedures:

Existing Subsurface Conditions: Refer attached test pit log(s) – Pit(s) 80,81 and Drawing 1.

Bulk Earthworks: Based on Douglas Partners records, controlled fill was placed within the block under Level 1 control as defined in AS 3798:2007 during subdivision construction.

Laboratory Results: Previous laboratory testing results indicated liquid limit ranging from 25-80%, plasticity index ranging from 12-57% and linear shrinkage ranging from 6-20%.

Site Classification: Site classification in accordance with AS2870:2011 provides guidance on the patterns and magnitude of moisture related seasonal ground movements that must be considered in design. Based on the current soil profile / state, on limited subsurface information, soil reactivity and allowing for variation in the subsoil profile, the soil profile would be equivalent to Class M* (moderately reactive/filled) conditions. The site classification must be reassessed should the subsurface profile change by either cutting or filling and/or if the presence of service trenches, retaining walls or submerged structures are within the zone of influence of the proposed footings. Reference must be made to the comments provided below.

Footing Systems: Reference must be made to AS2870:2011 which indicates footing systems that are appropriate for each site classification. All footings must found within a uniform bearing stratum of suitable strength/material, below the zone of influence of any service trenches, backfill zones, retaining walls or underground structures. Masonry walls should be articulated in accordance with current best practice. Dwelling design must ensure suitable drainage and uniform moisture conditions are maintained in the vicinity of footings. Footing systems must be confirmed by a structural engineer taking into consideration any onsite or offsite constraints.

Maintenance Guidelines: Reference should be made to the attached CSIRO Sheet BTF 18 'Foundation Maintenance & Footing Performance' to comments about gardens, landscaping and trees on the performance of foundation soils and in particular in respect to maintaining good surface drainage. It notes that minor cracking in most structures is inevitable, and it describes site maintenance practices aimed at minimising foundation movements that can lead to cracking damage.

Comments/Limitations:

The successful purchaser must make their own interpretations, deductions and conclusions from the information made available and will need to accept full responsibility for such interpretations, deductions and conclusions. To that end development specific geotechnical investigations must be undertaken and it is recommended that footing excavations be inspected by a geotechnical engineer.

Some variability in subsurface conditions must be anticipated with the possibility additional topsoils / fill may have been spread subsequent to the investigation.

Site preparation prior to the construction should include removal of all vegetation, topsoil and any uncontrolled fill and all new fill must be placed under controlled conditions (AS 3798:2007), otherwise Class P conditions would be warranted in those fill areas. Some remnant tree roots may still be present within the natural profile, generally embedded within the weathered rock, at the existing ground surface or below any controlled fill.

Depending on the depth of site cut and trenches, rock excavation may be required.

Moisture condition of site soils and/or the presence of groundwater may vary considerably from time of investigation compared to at the time of construction. Groundwater seepages are highly likely after heavy or prolonged rain.

This report must be read in conjunction with the attached "Limitations" and notes "About this Report".

References:

AS 2870:2011, Residential Slabs and Footings, Standards Australia.

AS 3798:2007, Guidelines on Earthworks for Commercial and Residential Developments, Standards Australia.

Attachments:

Limitations & About this Report	Test Pit Log(s) Pit(s) 80,81
Explanatory Notes	Drawing 1

Written by: Alastair Hirsch Reviewed by: Michael Jones

Douglas PARTNERS | GROUNDED EXPERTISE

Limitations:

Douglas Partners Pty Ltd (Douglas) has prepared this report for this project at Stage 7 Denman North Estate, Denman Prospect ACT in line with Douglas' proposal 88231.42.P.001.Rev1 dated 10 November 2022 and acceptance received from Capital Estate Developments Pty Ltd dated 10 November 2022. The work was carried out under Douglas' Engagement Terms. This report is provided for the exclusive use of Capital Estate Developments Pty Ltd for this project only and for the purposes as described in the report. It should not be used by or relied upon for other projects or purposes on the same or other site or by a third party. Any party so relying upon this report beyond its exclusive use and purpose as stated above, and without the express written consent of Douglas, does so entirely at its own risk and without recourse to Douglas for any loss or damage. In preparing this report Douglas has necessarily relied upon information provided by the client and/or their agents.

The results provided in the report are indicative of the sub-surface conditions on the site only at the specific sampling and/or testing locations, and then only to the depths investigated and at the time the work was carried out. Sub-surface conditions can change abruptly due to variable geological processes and also as a result of human influences. Such changes may occur after Douglas' field testing has been completed.

Douglas' advice is based upon the conditions encountered during this investigation. The accuracy of the advice provided by Douglas in this report may be affected by undetected variations in ground conditions across the site between and beyond the sampling and/or testing locations. The advice may also be limited by budget constraints imposed by others or by site accessibility.

The assessment of atypical safety hazards arising from this advice is restricted to the geotechnical components set out in this report and based on known project conditions and stated design advice and assumptions. While some recommendations for safe controls may be provided, detailed 'safety in design' assessment is outside the current scope of this report and requires additional project data and assessment.

The scope of work for this investigation/report did not include the assessment of surface or sub-surface materials or groundwater for contaminants, within or adjacent to the site. Should evidence of fill of unknown origin be noted in the report, and in particular the presence of building demolition materials, it should be recognised that there may be some risk that such fill may contain contaminants and hazardous building materials.

This report must be read in conjunction with all of the attached and should be kept in its entirety without separation of individual pages or sections. Douglas cannot be held responsible for interpretations or conclusions made by others unless they are supported by an expressed statement, interpretation, outcome or conclusion stated in this report.

This report, or sections from this report, should not be used as part of a specification for a project, without review and agreement by Douglas. This is because this report has been written as advice and opinion rather than instructions for construction.

About this Report

November 2023

Introduction

These notes have been provided to amplify DP's report in regard to classification methods, field procedures and the comments section. Not all are necessarily relevant to all reports.

DP's reports are based on information gained from limited subsurface excavations and sampling, supplemented by knowledge of local geology and experience. For this reason, they must be regarded as interpretive rather than factual documents, limited to some extent by the scope of information on which they rely.

Copyright

This report is the property of Douglas Partners Pty Ltd. The report may only be used for the purpose for which it was commissioned and in accordance with the Conditions of Engagement for the commission supplied at the time of proposal. Unauthorised use of this report in any form whatsoever is prohibited.

Borehole and Test Pit Logs

The borehole and test pit logs presented in this report are an engineering and/or geological interpretation of the subsurface conditions, and their reliability will depend to some extent on frequency of sampling and the method of drilling or excavation. Ideally, continuous undisturbed sampling or core drilling will provide the most reliable assessment, but this is not always practicable or possible to justify on economic grounds. In any case the boreholes and test pits represent only a very small sample of the total subsurface profile.

Interpretation of the information and its application to design and construction should therefore take into account the spacing of boreholes or pits, the frequency of sampling, and the possibility of other than 'straight line' variations between the test locations.

Groundwater

Where groundwater levels are measured in boreholes there are several potential problems, namely:

- In low permeability soils groundwater may enter the hole very slowly or perhaps not at all during the time the hole is left open;
- A localised, perched water table may lead to an erroneous indication of the true water table;
- Water table levels will vary from time to time with seasons or recent weather changes. They may not be the same at the time of construction as are indicated in the report; and
- The use of water or mud as a drilling fluid will mask any groundwater inflow. Water has to be blown out of the hole and drilling mud must first be washed out of the hole if water measurements are to be made.

More reliable measurements can be made by installing standpipes which are read at intervals over several days, or perhaps weeks for low permeability soils. Piezometers, sealed in a particular stratum, may be advisable in low permeability soils or where there may be interference from a perched water table.

Reports

The report has been prepared by qualified personnel, is based on the information obtained from field and laboratory testing, and has been undertaken to current engineering standards of interpretation and analysis. Where the report has been prepared for a specific design proposal, the information and interpretation may not be relevant if the design proposal is changed. If this happens, DP will be pleased to review the report and the sufficiency of the investigation work.

Every care is taken with the report as it relates to interpretation of subsurface conditions, discussion of geotechnical and environmental aspects, and recommendations or suggestions for design and construction. However, DP cannot always anticipate or assume responsibility for:

- Unexpected variations in ground conditions. The potential for this will depend partly on borehole or pit spacing and sampling frequency;
- Changes in policy or interpretations of policy by statutory authorities; or
- The actions of contractors responding to commercial pressures.

If these occur, DP will be pleased to assist with investigations or advice to resolve the matter.

continued next page

About this Report

Site Anomalies

In the event that conditions encountered on site during construction appear to vary from those which were expected from the information contained in the report, DP requests that it be immediately notified. Most problems are much more readily resolved when conditions are exposed rather than at some later stage, well after the event.

Information for Contractual Purposes

Where information obtained from this report is provided for tendering purposes, it is recommended that all information, including the written report and discussion, be made available. In circumstances where the discussion or comments section is not relevant to the contractual situation, it may be appropriate to prepare a specially edited document. DP would be pleased to assist in this regard and/or to make additional report copies available for contract purposes at a nominal charge.

Site Inspection

The company will always be pleased to provide engineering inspection services for geotechnical and environmental aspects of work to which this report is related. This could range from a site visit to confirm that conditions exposed are as expected, to full time engineering presence on site.

intentionally blank

intentionally blank

Terminology, Symbols and Abbreviations

November 2023

Introduction to Terminology, Symbols and Abbreviations

Douglas Partners' reports, investigation logs, and other correspondence may use terminology which has quantitative or qualitative connotations. To remove ambiguity or uncertainty surrounding the use of such terms, the following sets of notes pages may be attached Douglas Partners' reports, depending on the work performed and conditions encountered:

- Soil Descriptions;
- Rock Descriptions; and
- Sampling, insitu testing, and drilling methodologies

In addition to these pages, the following notes generally apply to most documents.

Abbreviation Codes

Site conditions may also be presented in a number of different formats, such as investigation logs, field mapping, or as a written summary. In some of these formats textual or symbolic terminology may be presented using textual abbreviation codes or graphic symbols, and, where commonly used, these are listed alongside the terminology definition. For ease of identification in these note pages, textual codes are presented in these notes in the following style XW. Code usage conforms with the following guidelines:

- Textual codes are case insensitive, although herein they are generally presented in upper case; and
- Textual codes are contextual (i.e. the same or similar combinations of characters may be used in different contexts with different meanings (for example `PL` is used for plastic limit in the context of soil moisture condition, as well as in `PL(A)` for point load test result in the testing results column)).

Data Integrity Codes

Subsurface investigation data recorded by Douglas Partners is generally managed in a highly structured database environment, where records "span" between a top and bottom depth interval. Depth interval "gaps" between records are considered to introduce ambiguity, and, where appropriate, our practice guidelines may require contiguous data sets. Recording meaningful data is not always appropriate (for example assigning a "strength" to a concrete pavement) and the following codes may be used to maintain contiguity in such circumstances.

Term	Description	Abbreviation Code
Core loss	No core recovery	KL
Unknown	Information was not available to allow classification of the property. For example, when auguring in loose, saturated sand auger cuttings may not be returned.	UK
No data	Information required to allow classification of the property was not available. For example if drilling is commenced from the base of a hole predrilled by others	ND
Not Applicable	Derivation of the properties not appropriate or beyond the scope of the investigation. For example providing a description of the strength of a concrete pavement	NA

Graphic Symbols

Douglas Partners' logs contain a "graphic" column which provides a pictorial representation of the basic composition of the material. The symbols used are directly representing the material name stated in the adjacent "Description of Strata" column, and as such no specific graphic symbology legend has been provided in these notes.

intentionally blank

Soil Descriptions

Introduction

All materials which are not considered to be "in-situ rock" are described in general accordance with the soil description model of AS 1726-2017 Part 6.1.3, and can be broken down into the following description structure:

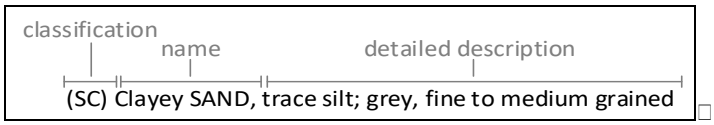

The "classification" comprises a two character "group symbol" providing a general summary of dominant soil characteristics. The "name" summarises the particle sizes within the soil which most influence its behaviour. The detailed description presents more information about composition, condition, structure, and origin of the soil.

Classification, naming and description of soils require the relative proportion of particles of different sizes within the whole soil mixture to be considered.

Particle size designation and Behaviour Model

Solid particles within a soil are differentiated on the basis of size.

The engineering behaviour properties of a soil can subsequently be modelled to be either "fine grained" (also known as "cohesive" behaviour) or "coarse grained" ("non cohesive" behaviour), depending on the relative proportion of fine or coarse fractions in the soil mixture.

Particle Size Designation	Particle Size (mm)	Behaviour Model	
		Behaviour	Approximate Dry Mass
Boulder	>200	Excluded from particle behaviour model as "oversize"	
Cobble	63 - 200		
Gravel[1]	2.36 - 63	Coarse	>65%
Sand[1]	0.075 - 2.36		
Silt	0.002 - 0.075	Fine	>35%
Clay	<0.002		

[1] – refer grain size subdivision descriptions below

The behaviour model boundaries defined above are not precise, and the material behaviour should be assumed from the name given to the material (which considers the particle fraction which dominates the behaviour, refer "component proportions" below), rather than strict observance of the proportions of particle sizes. For example, if a material is named a "Sandy CLAY", this is indicative that the material exhibits fine grained behaviour, even if the dry mass of coarse grained material may exceed 65%.

Component proportions

The relative proportion of the dry mass of each particle size fraction is assessed to be a "primary", "secondary", or "minor" component of the soil mixture, depending on its influence over the soil behaviour.

Component Proportion Designation	Definition[1]	Relative Proportion	
		In Fine Grained Soil	In Coarse Grained Soil
Primary	The component (particle size designation, refer above) which dominates the engineering behaviour of the soil	The clay/silt component with the greater proportion	The sand/gravel component with the greater proportion
Secondary	Any component which is not the primary, but is significant to the engineering properties of the soil	Any component with greater than 30% proportion	Any granular component with greater than 30%; or Any fine component with greater than 12%
Minor[2]	Present in the soil, but not significant to its engineering properties	All other components	All other components

[1] As defined in AS1726-2017 6.1.4.4

[2] In the detailed material description, minor components are split into two further sub-categories. Refer "identification of minor components" below.

Composite Materials

In certain situations, a lithology description may describe more than one material, for example, collectively describing a layer of interbedded sand and clay. In such a scenario, the two materials would be described independently, with the names preceded or followed by a statement describing the arrangement by which the materials co-exist. For example, "INTERBEDDED Silty CLAY AND SAND".

Soil Descriptions

Classification

The soil classification comprises a two character group symbol. The first character identifies the primary component. The second character identifies either the grading or presence of fines in a coarse grained soil, or the plasticity in a fine grained soil. Refer AS1726-2017 6.1.6 for further clarification.

Soil Name

For most soils, the name is derived with the primary component included as the noun (in upper case), preceded by any secondary components stated in an adjective form. In this way, the soil name also describes the general composition and indicates the dominant behaviour of the material.

Component [1]	Prominence in Soil Name
Primary	Noun (eg "CLAY")
Secondary	Adjective modifier (eg "Sandy")
Minor	No influence

[1] – for determination of component proportions, refer component proportions on previous page

For materials which cannot be disaggregated, or which are not comprised of rock or mineral fragments, the names "ORGANIC MATTER" or "ARTIFICIAL MATERIAL" may be used, in accordance with AS1726-2017 Table 14.

Commercial or colloquial names are not used for the soil name where a component derived name is possible (for example "Gravelly SAND" rather than "CRACKER DUST").

Materials of "fill" or "topsoil" origin are generally assigned a name derived from the primary/secondary component (where appropriate). In log descriptions this is preceded by uppercase "FILL" or "TOPSOIL". Origin uncertainty is indicated in the description by the characters (?), with the degree of uncertainty described (using the terms "probably" or "possibly" in the origin column, or at the end of the description).

Identification of minor components

Minor components are identified in the soil description immediately following the soil name. The minor component fraction is usually preceded with a term indicating the relative proportion of the component.

Minor Component Proportion Term	Relative Proportion	
	In Fine Grained Soil	In Coarse Grained Soil
With	All fractions: 15-30%	Clay/silt: 5-12% sand/gravel: 15-30%
Trace	All fractions: 0-15%	Clay/silt: 0-5% sand/gravel: 0-15%

The terms "with" and "trace" generally apply only to gravel or fine particle fractions. Where cobbles/boulders are encountered in minor proportions (generally less than about 12%) the term "occasional" may be used. This term describes the sporadic distribution of the material within the confines of the investigation excavation only, and there may be considerable variation in proportion over a wider area which is difficult to factually characterise due to the relative size of the particles and the investigation methods.

Soil Composition

Plasticity

Descriptive Term	Laboratory liquid limit range	
	Silt	Clay
Non-plastic materials	Not applicable	Not applicable
Low plasticity	≤50	≤35
Medium plasticity	Not applicable	>35 and ≤50
High plasticity	>50	>50

Note, Plasticity descriptions generally describe the plasticity behaviour of the whole of the fine grained soil, not individual fine grained fractions.

Grain Size

Type		Particle size (mm)
Gravel	Coarse	19 - 63
	Medium	6.7 - 19
	Fine	2.36 – 6.7
Sand	Coarse	0.6 - 2.36
	Medium	0.21 - 0.6
	Fine	0.075 - 0.21

Grading

Grading Term	Particle size (mm)
Well	A good representation of all particle sizes
Poorly	An excess or deficiency of particular sizes within the specified range
Uniformly	Essentially of one size
Gap	A deficiency of a particular size or size range within the total range

Note, AS1726-2017 provides terminology for additional attributes not listed here.

Soil Descriptions

Soil Condition

Moisture

The moisture condition of soils is assessed relative to the plastic limit for fine grained soils, while for coarse grained soils it is assessed based on the appearance and feel of the material. The moisture condition of a material is considered to be independent of stratigraphy (although commonly these are related), and this data is presented in its own column on logs.

Applicability	Term	Tactile Assessment	Abbreviation code
Fine	Dry of plastic limit	Hard and friable or powdery	w<PL
	Near plastic limit	Can be moulded	w=PL
	Wet of plastic limit	Water residue remains on hands when handling	w>PL
	Near liquid limit	"oozes" when agitated	w=LL
	Wet of liquid limit	"oozes"	w>LL
Coarse	Dry	Non-cohesive and free running	D
	Moist	Feels cool, darkened in colour, particles may stick together	M
	Wet	Feels cool, darkened in colour, particles may stick together, free water forms when handling	W

The abbreviation code NDF, meaning "not-assessable due to drilling fluid use" may also be used.

Note, observations relating to free ground water or drilling fluids are provided independent of soil moisture condition.

Consistency/Density/Compaction/Cementation/Extremely Weathered Material

These concepts give an indication of how the material may respond to applied forces (when considered in conjunction with other attributes of the soil). This behaviour can vary independent of the composition of the material, and on logs these are described in an independent column and are generally mutually exclusive (i.e it is inappropriate to describe both consistency and compaction at the same time). The method by which the behaviour is described depends on the behaviour model and other characteristics of the soil as follows:

- In fine grained soils, the "consistency" describes the ease with which the soil can be remoulded, and is generally correlated against the materials undrained shear strength;
- In granular materials, the relative density describes how tightly packed the particles are, and is generally correlated against the density index;
- In anthropogenically modified materials, the compaction of the material is described qualitatively;
- In cemented soils (both natural and anthropogenic), the cemented "strength" is described qualitatively, relative to the difficulty with which the material is disaggregated; and
- In soils of extremely weathered material origin, the engineering behaviour may be governed by relic rock features, and expected behaviour needs to be assessed based the overall material description.

Quantitative engineering performance of these materials may be determined by laboratory testing or estimated by correlated field tests (for example penetration or shear vane testing). In some cases, performance may be assessed by tactile or other subjective methods, in which case investigation logs will show the estimated value enclosed in round brackets, for example (VS).

Consistency (fine grained soils)

Consistency Term	Tactile Assessment	Undrained Shear Strength (kPa)	Abbreviation Code
Very soft	Extrudes between fingers when squeezed	<12	VS
Soft	Mouldable with light finger pressure	>12 - ≤25	S
Firm	Mouldable with strong finger pressure	>25 - ≤50	F
Stiff	Cannot be moulded by fingers	>50 - ≤100	St
Very stiff	Indented by thumbnail	>100 - ≤200	VSt
Hard	Indented by thumbnail with difficulty	>200	H
Friable	Easily crumbled or broken into small pieces by hand	-	Fr

Relative Density (coarse grained soils)

Relative Density Term	Density Index	Abbreviation Code
Very loose	<15	VL
Loose	>15 - ≤35	L
Medium dense	>35 - ≤65	MD
Dense	>65 - ≤85	D
Very dense	>85	VD

Note, tactile assessment of relative density is difficult, and generally requires penetration testing, hence a tactile assessment guide is not provided

Soil Descriptions

Compaction (anthropogenically modified soil)

Compaction Term	Abbreviation Code
Well compacted	WC
Poorly compacted	PC
Moderately compacted	MC
Variably compacted	VC

Cementation (natural and anthropogenic)

Cementation Term	Abbreviation Code
Moderately cemented	MOD
Weakly cemented	WEK

Extremely Weathered Material

AS1726-2017 considers weathered material to be soil if the unconfined compressive strength is less than 0.6 MPa (i.e. less than very low strength rock). These materials may be identified as "extremely weathered material" in reports and by the abbreviation code XWM on log sheets. This identification is not correlated to any specific qualitative or quantitative behaviour, and the engineering properties of this material must therefore be assessed according to engineering principles with reference to any relic rock structure, fabric, or texture described in the description.

Soil Origin

Term	Description	Abbreviation Code
Residual	Derived from in-situ weathering of the underlying rock	RS
Extremely weathered material	Formed from in-situ weathering of geological formations. Has strength of less than 'very low' as per as1726 but retains the structure or fabric of the parent rock.	XWM
Alluvial	Deposited by streams and rivers	ALV
Fluvial	Deposited by channel fill and overbank (natural levee, crevasse splay or flood basin)	FLV
Estuarine	Deposited in coastal estuaries	EST
Marine	Deposited in a marine environment	MAR
Lacustrine	Deposited in freshwater lakes	LAC
Aeolian	Carried and deposited by wind	AEO
Colluvial	Soil and rock debris transported down slopes by gravity	COL
Slopewash	Thin layers of soil and rock debris gradually and slowly deposited by gravity and possibly water	SW
Topsoil	Mantle of surface soil, often with high levels of organic material	TOP
Fill	Any material which has been moved by man	FILL
Littoral	Deposited on the lake or seashore	LIT
Unidentifiable	Not able to be identified	UID

Cobbles and Boulders

The presence of particles considered to be "oversize" may be described using one of the following strategies:

- Oversize encountered in a minor proportion (when considered relative to the wider area) are noted in the soil description; or
- Where a significant proportion of oversize is encountered, the cobbles/boulders are described independent of the soil description, in a similar manner to composite soils (described above) but qualified with "MIXTURE OF".

intentionally blank

Rock Strength

Rock strength is defined by the unconfined compressive strength, and it refers to the strength of the rock substance and not the strength of the overall rock mass, which may be considerably weaker due to defects.

The Point Load Strength Index $I_{s(50)}$ is commonly used to provide an estimate of the rock strength and site specific correlations should be developed to allow UCS values to be determined. The point load strength test procedure is described by Australian Standard AS4133.4.1-2007. The terms used to describe rock strength are as follows:

Strength Term	Unconfined Compressive Strength (MPa)	Point Load Index[1] $I_{s(50)}$ MPa	Abbreviation Code
Very low	0.6 - 2	0.03 - 0.1	VL
Low	2 - 6	0.1 - 0.3	L
Medium	6 - 20	0.3 - 1.0	M
High	20 - 60	1 - 3	H
Very high	60 - 200	3 - 10	VH
Extremely high	>200	>10	EH

[1] Rock strength classification is based on UCS. The UCS to $I_{s(50)}$ ratio varies significantly for different rock types and specific ratios may be required for each site. The point load Index ranges shown above are as suggested in AS1726 and should not be relied upon without supporting evidence.

The following abbreviation codes are used for soil layers or seams of material "within rock" but for which the equivalent UCS strength is less than 0.6 MPa.

Scenario	Abbreviation Code
The material encountered has an equivalent UCS strength of less than 0.6 MPa, and therefore is considered to be soil (as per Note 1 of Table 20 of AS 1726-2017). The properties of the material encountered over this interval are described in the "Description of Strata" and soil properties columns.	SOIL
The material encountered has an equivalent UCS strength of less than 0.6 MPa, and therefore is considered to be soil (as per Note 1 of Table 20 of AS 1726-2017). The prominence of the material is such that it can be considered to be a seam (as defined in Table 22 of AS1726-2017) and the properties of the material are described in the defect column.	SEAM

Degree of Weathering

The degree of weathering of rock is classified as follows:

Weathering Term	Description	Abbreviation Code
Residual Soil[1]	Material is weathered to such an extent that it has soil properties. Mass structure and material texture and fabric of original rock are no longer visible, but the soil has not been significantly transported.	RS
Extremely weathered[1]	Material is weathered to such an extent that it has soil properties. Mass structure and material texture and fabric of original rock are still visible	XW
Highly weathered	The whole of the rock material is discoloured, usually by iron staining or bleaching to the extent that the colour of the original rock is not recognisable. Rock strength is significantly changed by weathering. Some primary minerals have weathered to clay minerals. Porosity may be increased by leaching or may be decreased due to deposition of weathering products in pores.	HW
Moderately weathered	The whole of the rock material is discoloured, usually by iron staining or bleaching to the extent that the colour of the original rock is not recognisable but shows little or no change of strength from fresh rock.	MW
Slightly weathered	Rock is partially discoloured with staining or bleaching along joints but shows little or no change of strength from fresh rock.	SW
Fresh	No signs of decomposition or staining.	FR
Note: If HW and MW cannot be differentiated use DW (see below)		
Distinctly weathered	Rock strength usually changed by weathering. The rock may be highly discoloured, usually by iron staining. Porosity may be increased by leaching or may be decreased due to deposition of weathered products in pores.	DW

[1] The parent rock type, of which the residual/extremely weathered material is a derivative, will be stated in the description (where discernible).

Degree of Alteration

The degree of alteration of the rock material (physical or chemical changes caused by hot gasses or liquids at depth) is classified as follows:

Term	Description	Abbreviation Code
Extremely altered	Material is altered to such an extent that it has soil properties. Mass structure and material texture and fabric of original rock are still visible.	XA
Highly altered	The whole of the rock material is discoloured, usually by staining or bleaching to the extent that the colour of the original rock is not recognisable. Rock strength is changed by alteration. Some primary minerals are altered to clay minerals. Porosity may be increased by leaching or may be decreased due to precipitation of secondary materials in pores.	HA
Moderately altered	The whole of the rock material is discoloured, usually by staining or bleaching to the extent that the colour of the original rock is not recognisable but shows little or no change of strength from fresh rock.	MA
Slightly altered	Rock is slightly discoloured but shows little or no change of strength from fresh rock	SA
Note: If HA and MA cannot be differentiated use DA (see below)		
Distinctly altered	Rock strength usually changed by alteration. The rock may be highly discoloured, usually by staining or bleaching. Porosity may be increased by leaching or may be decreased due to precipitation of secondary minerals in pores.	DA

Degree of Fracturing

The following descriptive classification apply to the spacing of natural occurring fractures in the rock mass. It includes bedding plane partings, joints and other defects, but excludes drilling breaks. These terms are generally not required on investigation logs where fracture spacing is presented as a histogram, and where used are presented in an unabbreviated format.

Term	Description
Fragmented	Fragments of <20 mm
Highly Fractured	Core lengths of 20-40 mm with occasional fragments
Fractured	Core lengths of 30-100 mm with occasional shorter and longer sections
Slightly Fractured	Core lengths of 300 mm or longer with occasional sections of 100-300 mm
Unbroken	Core contains very few fractures

Rock Quality Designation

The quality of the cored rock can be measured using the Rock Quality Designation (RQD) index, defined as:

$$\text{RQD \%} = \frac{\text{cumulative length of 'sound' core sections} > \text{100 mm long}}{\text{total drilled length of section being assessed}}$$

where 'sound' rock is assessed to be rock of low strength or stronger. The RQD applies only to natural fractures. If the core is broken by drilling or handling (i.e., drilling breaks) then the broken pieces are fitted back together and are not included in the calculation of RQD.

Stratification Spacing

These terms may be used to describe the spacing of bedding partings in sedimentary rocks. Where used, these terms are generally presented in an unabbreviated format

Term	Separation of Stratification Planes
Thinly laminated	< 6 mm
Laminated	6 mm to 20 mm
Very thinly bedded	20 mm to 60 mm
Thinly bedded	60 mm to 0.2 m
Medium bedded	0.2 m to 0.6 m
Thickly bedded	0.6 m to 2 m
Very thickly bedded	> 2 m

Rock Descriptions

Defect Descriptions

Defect Type

Term	Abbreviation Code
Bedding plane	B
Cleavage	CL
Crushed seam	CS
Crushed zone	CZ
Drilling break	DB
Decomposed seam	DS
Drill lift	DL
Extremely Weathered seam	EW
Fault	F
Fracture	FC
Fragmented	FG
Handling break	HB
Infilled seam	IS
Joint	JT
Lamination	LAM
Shear seam	SS
Shear zone	SZ
Vein	VN
Mechanical break	MB
Parting	P
Sheared Surface	S

Rock Defect Orientation

Term	Abbreviation Code
Horizontal	H
Vertical	V
Sub-horizontal	SH
Sub-vertical	SV

Rock Defect Coating

Term	Abbreviation Code
Clean	CN
Coating	CT
Healed	HE
Infilled	INF
Stained	SN
Tight	TI
Veneer	VNR

Rock Defect Infill

Term	Abbreviation Code
Calcite	CA
Carbonaceous	CBS
Clay	CLAY
Iron oxide	FE
Manganese	MN
Pyrite	Py
Secondary material	MS
Silt	M
Quartz	Qz
Unidentified material	MU

Rock Defect Shape/Planarity

Term	Abbreviation Code
Curved	CU
Discontinuous	DIS
Irregular	IR
Planar	PR
Stepped	ST
Undulating	UN

Rock Defect Roughness

Term	Abbreviation Code
Polished	PO
Rough	RF
Smooth	SM
Slickensided	SL
Very rough	VR

Defect Orientation
The inclination of defects is always measured from the perpendicular to the core axis

intentionally blank

Sampling and Testing

A record of samples retained, and field testing performed is usually shown on a Douglas Partners' log with samples appearing to the left of a depth scale, and selected field and laboratory testing (including results, where relevant) appearing to the right of the scale, as illustrated below:

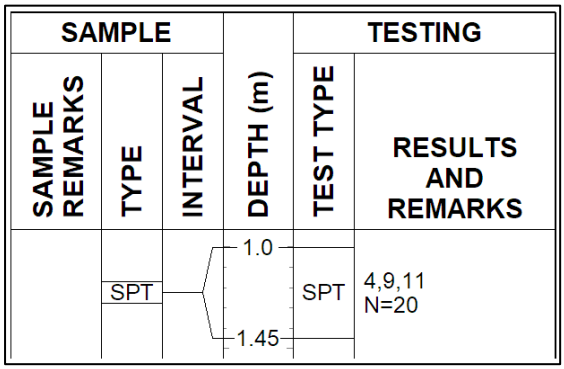

Sampling

The type or intended purpose for which a sample was taken is indicated by the following abbreviation codes.

Sample Type	Code
Auger sample	A
Acid Sulfate sample	ASS
Bulk sample	B
Core sample	C
Disturbed sample	D
Environmental sample	ES
Gas sample	G
Piston sample	P
Sample from SPT test	SPT
Undisturbed tube sample	U[1]
Water sample	W
Material Sample	MT
Core sample for unconfined compressive strength testing	UCS

[1] – numeric suffixes indicate tube diameter/width in mm

The above codes only indicate that a sample was retained, and not that testing was scheduled or performed.

Field and Laboratory Testing

A record that field and laboratory testing was performed is indicated by the following abbreviation codes.

Test Type	Code
Pocket penetrometer (kPa)	PP
Photo ionisation detector (ppm)	PID
Standard Penetration Test x/y = x blows for y mm penetration HB = hammer bouncing HW = fell under weight of hammer	SPT
Shear vane (kPa)	V
Unconfined compressive strength, (MPa)	UCS

Field and laboratory testing (continued)

Test Type	Code
Point load test, (MPa), axial (A), diametric (D), irregular (I)	PLT(_)
Dynamic cone penetrometer, followed by blow count penetration increment in mm (cone tip, generally in accordance with AS1289.6.3.2)	DCP/150
Perth sand penetrometer, followed by blow count penetration increment in mm (flat tip, generally in accordance with AS1289.6.3.3)	PSP/150

Groundwater Observations

▷	seepage/inflow
▽	standing or observed water level
NFGWO	no free groundwater observed
OBS	observations obscured by drilling fluids

Drilling or Excavation Methods/Tools

The drilling/excavation methods used to perform the investigation may be shown either in a dedicated column down the left-hand edge of the log, or stated in the log footer. In some circumstances abbreviation codes may be used.

Method	Abbreviation Code
Direct Push	DP
Solid flight auger. Suffixes: /T = tungsten carbide tip, /V = v-shaped tip	AD[1]
Air Track	AT
Diatube	DT[1]
Hand auger	HA[1]
Hand tools (unspecified)	HAND
Existing exposure	X
Hollow flight auger	HSA[1]
HQ coring	HQ3
HMLC series coring	HMLC
NMLC series coring	NMLC
NQ coring	NQ3
PQ coring	PQ3
Predrilled	PD
Push tube	PT[1]
Ripping tyne/ripper	R
Rock roller	RR[1]
Rock breaker/hydraulic hammer	EH
Sonic drilling	SON[1]
Mud/blade bucket	MB[1]
Toothed bucket	TB[1]
Vibrocore	VC[1]
Vacuum excavation	VE
Wash bore (unspecified bit type)	WB[1]

[1] – numeric suffixes indicate tool diameter/width in mm

FOUNDATION MAINTENANCE AND FOOTING PERFORMANCE

Understanding and preventing soil-related building movement

This Building Technology Resource is designed to identify causes of soil-related building movement, and to suggest methods of prevention of resultant cracking.

Buildings can and often do move. This movement can be up, down, lateral or rotational. The fundamental cause of movement in buildings can usually be related to one or more problems in the foundation soil. It is important for the home owner to identify the soil type in order to ascertain the measures that should be put in place in order to ensure that problems in the foundation soil can be prevented, thus protecting against building movement.

SOIL TYPES

The types of soils usually present under the topsoil in land zoned for residential buildings can be split into two approximate groups – granular and clay. Quite often, foundation soil is a mixture of both types. The general problems associated with soils having granular content are usually caused by erosion. Clay soils are subject to saturation and swell/shrink problems.

Classifications for a given area can generally be obtained by application to the local authority, but these are sometimes unreliable and if there is doubt, a geotechnical report should be commissioned. As most buildings suffering movement problems are founded on clay soils, there is an emphasis on classification of soils according to the amount of swell and shrinkage they experience with variations of water content. Table 1 below is a reproduction of Table 2.1 from Australian Standard AS 2870-2011, Residential slabs and footings.

CAUSES OF MOVEMENT

SETTLEMENT DUE TO CONSTRUCTION

There are two types of settlement that occur as a result of construction:

- Immediate settlement occurs when a building is first placed on its foundation soil, as a result of compaction of the soil under the weight of the structure. The cohesive quality of clay soil mitigates against this, but granular (particularly sandy) soil is susceptible.
- Consolidation settlement is a feature of clay soil and may take place because of the expulsion of moisture from the soil or because of the soil's lack of resistance to local compressive or shear stresses. This will usually take place during the first few months after construction but has been known to take many years in exceptional cases.

These problems may be the province of the builder and should be taken into consideration as part of the preparation of the site for construction.

EROSION

All soils are prone to erosion, but sandy soil is particularly susceptible to being washed away. Even clay with a sand component of say 10% or more can suffer from erosion.

SATURATION

This is particularly a problem in clay soils. Saturation creates a bog-like suspension of the soil that causes it to lose virtually all of its bearing capacity. To a lesser degree, sand is affected by saturation because saturated sand may undergo a reduction in volume, particularly imported sand fill for bedding and blinding layers. However, this usually occurs as immediate settlement and should normally be the province of the builder.

SEASONAL SWELLING AND SHRINKAGE OF SOIL

All clays react to the presence of water by slowly absorbing it, making the soil increase in volume (see table below, from AS 2870). The degree of increase varies considerably between different clays, as does the degree of decrease during the subsequent drying out caused by fair weather periods. Because of the low absorption and expulsion rate, this phenomenon will not usually be noticeable unless there are prolonged rainy or dry periods, usually of weeks or months, depending on the land and soil characteristics.

The swelling of soil creates an upward force on the footings of the building, and shrinkage creates subsidence that takes away the support needed by the footing to retain equilibrium.

SHEAR FAILURE

This phenomenon occurs when the foundation soil does not have sufficient strength to support the weight of the footing. There are two major post-construction causes:

- Significant load increase.
- Reduction of lateral support of the soil under the footing due to erosion or excavation.

In clay soil, shear failure can be caused by saturation of the soil adjacent to or under the footing.

TREE ROOT GROWTH

Trees and shrubs that are allowed to grow in the vicinity of footings can cause foundation soil movement in two ways:

- Roots that grow under footings may increase in cross-sectional size, exerting upward pressure on footings.

TABLE 1. GENERAL DEFINITIONS OF SITE CLASSES.

Class	Foundation
A	Most sand and rock sites with little or no ground movement from moisture changes
S	Slightly reactive clay sites, which may experience only slight ground movement from moisture changes
M	Moderately reactive clay or silt sites, which may experience moderate ground movement from moisture changes
H1	Highly reactive clay sites, which may experience high ground movement from moisture changes
H2	Highly reactive clay sites, which may experience very high ground movement from moisture changes
F	Extremely reactive sites, which may experience extreme ground movement from moisture changes

Source: Reproduced with the permission of Standards Australia Limited © 2011. Copyright in AS 2870-2011 Residential slabs and footings vests in Standards Australia Limited.

© CSIRO 2021

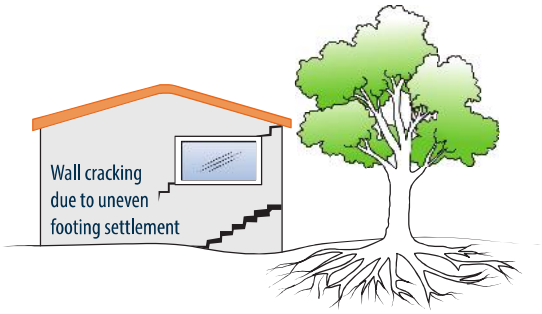

FIGURE 1 Trees can cause shrinkage and damage.

- Roots in the vicinity of footings will absorb much of the moisture in the foundation soil, causing shrinkage or subsidence.

UNEVENNESS OF MOVEMENT

The types of ground movement described above usually occur unevenly throughout the building's foundation soil. Settlement due to construction tends to be uneven because of:

- Differing compaction of foundation soil prior to construction.
- Differing moisture content of foundation soil prior to construction.

Movement due to non-construction causes is usually more uneven still. Erosion can undermine a footing that traverses the flow or can create the conditions for shear failure by eroding soil adjacent to a footing that runs in the same direction as the flow.

Saturation of clay foundation soil may occur where subfloor walls create a dam that makes water pond. It can also occur wherever there is a source of water near footings in clay soil. This leads to a severe reduction in the strength of the soil which may create local shear failure.

Seasonal swelling and shrinkage of clay soil affects the perimeter of the building first, then gradually spreads to the interior through absorption. The swelling process will usually begin at the uphill extreme of the building, or on the weather side where the land is flat. Shrinkage usually begins on the side of the building where the sun's heat is greatest.

EFFECTS OF UNEVEN SOIL MOVEMENT ON STRUCTURES

EROSION AND SATURATION

Erosion removes the support from under footings, tending to create subsidence of the part of the structure under which it occurs. Brickwork walls will resist the stress created by this removal of support by bridging the gap or cantilevering until the bricks or the mortar bedding fail. Older masonry has little resistance. Evidence of failure varies according to circumstances and symptoms may include:

- Step cracking in the mortar beds in the body of the wall or above/below openings such as doors or windows.
- Vertical cracking in the bricks (usually but not necessarily in line with the vertical beds or perpends).

Isolated piers affected by erosion or saturation of foundations will eventually lose contact with the bearers they support and may tilt or fall over. The floors that have lost this support will become bouncy, sometimes rattling ornaments etc.

SEASONAL SWELLING/SHRINKAGE IN CLAY

Swelling foundation soil due to rainy periods first lifts the most exposed extremities of the footing system, then the remainder of the perimeter footings while gradually permeating inside the building footprint to lift internal footings. This swelling first tends to create a dish effect, because the external footings are pushed higher than the internal ones.

The first noticeable symptom may be that the floor appears slightly dished. This is often accompanied by some doors binding on the floor or the door head, together with some cracking of cornice mitres. In buildings with timber flooring supported by bearers and joists, the floor can be bouncy. Externally there may be visible dishing of the hip or ridge lines.

As the moisture absorption process completes its journey to the innermost areas of the building, the internal footings will rise. If the spread of moisture is roughly even, it may be that the symptoms will temporarily disappear, but it is more likely that swelling will be uneven, creating a difference rather than a disappearance in symptoms. In buildings with timber flooring supported by bearers and joists, the isolated piers will rise more easily than the strip footings or piers under walls, creating noticeable doming of flooring.

As the weather pattern changes and the soil begins to dry out, the external footings will be first affected, beginning with the locations where the sun's effect is strongest. This has the effect of lowering the external footings. The doming is accentuated, and cracking reduces or disappears where it occurred because of dishing, but other cracks open up. The roof lines may become convex.

Doming and dishing are also affected by weather in other ways. In areas where warm, wet summers and cooler dry winters prevail, water migration tends to be toward the interior and doming will be accentuated, whereas where summers are dry, and winters are cold and wet, migration tends to be toward the exterior and the underlying propensity is toward dishing.

MOVEMENT CAUSED BY TREE ROOTS

In general, growing roots will exert an upward pressure on footings, whereas soil subject to drying because of tree or shrub roots will tend to remove support from under footings by inducing shrinkage.

COMPLICATIONS CAUSED BY THE STRUCTURE ITSELF

Most forces that the soil causes to be exerted on structures are vertical – i.e. either up or down. However, because these forces are seldom spread evenly around the footings, and because the building resists uneven movement because of its rigidity, forces are exerted from one part of the building to another. The net result of all these forces is usually rotational. This resultant force often complicates the diagnosis because the visible symptoms do not simply reflect the original cause. A common symptom is binding of doors on the vertical member of the frame.

EFFECTS ON FULL MASONRY STRUCTURES

Brickwork will resist cracking where it can. It will attempt to span areas that lose support because of subsided foundations or raised points. It is therefore usual to see cracking at weak points, such as openings for windows or doors.

In the event of construction settlement, cracking will usually remain unchanged after the process of settlement has ceased.

With local shear or erosion, cracking will usually continue to develop until the original cause has been remedied, or until the subsidence has completely neutralised the affected portion of footing and the structure has stabilised on other footings that remain effective.

In the case of swell/shrink effects, the brickwork will in some cases return to its original position after completion of a cycle, however it is more likely that the rotational effect will not be exactly reversed, and it is also usual that brickwork will settle in its new position and will resist the forces trying to return it to its original position. This means that in a case where swelling takes place after construction and cracking occurs, the cracking is likely to at least partly remain after the shrink segment of the cycle is complete. Thus, each time the cycle is repeated, the likelihood is that the cracking will become wider until the sections of brickwork become virtually independent.

With repeated cycles, once the cracking is established, if there is no other complication, it is normal for the incidence of cracking to stabilise, as the building has the articulation it needs to cope with the problem. This is by no means always the case, however, and monitoring of cracks in walls and floors should always be treated seriously.

Upheaval caused by growth of tree roots under footings is not a simple vertical shear stress. There is a tendency for the root to also

© CSIRO 2021

exert lateral forces that attempt to separate sections of brickwork after initial cracking has occurred.

The normal structural arrangement is that the inner leaf of brickwork in the external walls and at least some of the internal walls (depending on the roof type) comprise the load-bearing structure on which any upper floors, ceilings and the roof are supported. In these cases, it is internally visible cracking that should be the main focus of attention, however there are a few examples of dwellings whose external leaf of masonry plays some supporting role, so this should be checked if there is any doubt. In any case, externally visible cracking is important as a guide to stresses on the structure generally, and it should also be remembered that the external walls must be capable of supporting themselves.

EFFECTS ON FRAMED STRUCTURES

Timber or steel framed buildings are less likely to exhibit cracking due to swell/shrink than masonry buildings because of their flexibility. Also, the doming/dishing effects tend to be lower because of the lighter weight of walls. The main risks to framed buildings are encountered because of the isolated pier footings used under walls. Where erosion or saturation causes a footing to fall away, this can double the span which a wall must bridge. This additional stress can create cracking in wall linings, particularly where there is a weak point in the structure caused by a door or window opening. It is, however, unlikely that framed structures will be so stressed as to suffer serious damage without first exhibiting some or all of the above symptoms for a considerable period. The same warning period should apply in the case of upheaval. It should be noted, however, that where framed buildings are supported by strip footings there is only one leaf of brickwork and therefore the externally visible walls are the supporting structure for the building. In this case, the subfloor masonry walls can be expected to behave as full brickwork walls.

EFFECTS ON BRICK VENEER STRUCTURES

Because the load-bearing structure of a brick veneer building is the frame that makes up the interior leaf of the external walls plus perhaps the internal walls, depending on the type of roof, the building can be expected to behave as a framed structure, except that the external masonry will behave in a similar way to the external leaf of a full masonry structure.

WATER SERVICE AND DRAINAGE

Where a water service pipe, a sewer or stormwater drainage pipe is in the vicinity of a building, a water leak can cause erosion, swelling or saturation of susceptible soil. Even a minuscule leak can be enough to saturate a clay foundation. A leaking tap near a building can have the same effect. In addition, trenches containing pipes can become watercourses even though backfilled, particularly where broken rubble is used as fill. Water that runs along these trenches can be responsible for serious erosion, interstrata seepage into subfloor areas and saturation.

Pipe leakage and trench water flows also encourage tree and shrub roots to the source of water, complicating and exacerbating the problem. Poor roof plumbing can result in large volumes of rainwater being concentrated in a small area of soil:

- Incorrect falls in roof guttering may result in overflows, as may gutters blocked with leaves etc.
- Corroded guttering or downpipes can spill water to ground.
- Downpipes not positively connected to a proper stormwater collection system will direct a concentration of water to soil that is directly adjacent to footings, sometimes causing large-scale problems such as erosion, saturation and migration of water under the building.

SERIOUSNESS OF CRACKING

In general, most cracking found in masonry walls is a cosmetic nuisance only and can be kept in repair or even ignored. Table 2 below is a reproduction of Table C1 of AS 2870-2011.

AS 2870-2011 also publishes figures relating to cracking in concrete floors, however because wall cracking will usually reach the critical point significantly earlier than cracking in slabs, this table is not reproduced here.

PREVENTION AND CURE

PLUMBING

Where building movement is caused by water service, roof plumbing, sewer or stormwater failure, the remedy is to repair the problem. It is prudent, however, to consider also rerouting pipes away from the building where possible and relocating taps to positions where any leakage will not direct water to the building vicinity. Even where gully traps are present, there is sometimes sufficient spill to create erosion or saturation, particularly in modern installations using smaller diameter PVC fixtures. Indeed, some gully traps are not situated directly under the taps that are installed to charge them, with the result that water from the tap may enter the backfilled trench that houses the sewer piping. If the trench has been poorly backfilled, the water will either pond or flow along the bottom of the trench. As these trenches usually run alongside the footings and can be at a similar depth, it is not hard to see how any water that is thus directed into a trench can easily affect the foundation's ability to support footings or even gain entry to the subfloor area.

GROUND DRAINAGE

In all soils there is the capacity for water to travel on the surface and below it. Surface water flows can be established by inspection during and after heavy or prolonged rain. If necessary, a grated drain system connected to the stormwater collection system is usually an easy solution.

It is, however, sometimes necessary when attempting to prevent water migration that testing be carried out to establish watertable height and subsoil water flows. This subject may be regarded as an area for an expert consultant.

PROTECTION OF THE BUILDING PERIMETER

It is essential to remember that the soil that affects footings extends well beyond the actual building line. Watering of garden plants, shrubs and trees causes some of the most serious water problems.

For this reason, particularly where problems exist or are likely to occur, it is recommended that an apron of paving be installed around as much of the building perimeter as necessary. This paving should extend outwards a minimum of 900 mm (more in highly reactive soil) and should have a minimum fall away from the building of 1:60. The finished paving should be no less than 100 mm below brick vent bases.

It is prudent to relocate drainage pipes away from this paving, if possible, to avoid complications from future leakage. If this is not practical, earthenware pipes should be replaced by PVC and backfilling should be of the same soil type as the surrounding soil and compacted to the same density.

Except in areas where freezing of water is an issue, it is wise to remove taps in the building area and relocate them well away from the building – preferably not uphill.

It may be desirable to install a grated drain at the outside edge of the paving on the uphill side of the building. If subsoil drainage is needed this can be installed under the surface drain.

CONDENSATION

In buildings with a subfloor void, such as where bearers and joists support flooring, insufficient ventilation creates ideal conditions for condensation, particularly where there is little clearance between the floor and the ground. Condensation adds to the moisture already present in the subfloor and significantly slows the process of drying out. Installation of an adequate subfloor ventilation system, either natural or mechanical, is desirable.

© CSIRO 2021

TABLE 2. CLASSIFICATION OF DAMAGE WITH REFERENCE TO WALLS.

Description of typical damage and required repair	Approximate crack width limit	Damage category
Hairline cracks	<0.1 mm	0 – Negligible
Fine cracks which do not need repair	<1 mm	1 – Very Slight
Cracks noticeable but easily filled. Doors and windows stick slightly.	<5 mm	2 – Slight
Cracks can be repaired and possibly a small amount of wall will need to be replaced. Doors and windows stick. Service pipes can fracture. Weathertightness often impaired.	5–15 mm (or a number of cracks 3 mm or more in one group)	3 – Moderate
Extensive repair work involving breaking-out and replacing sections of walls, especially over doors and windows. Window and door frames distort. Walls lean or bulge noticeably, some loss of bearing in beams. Service pipes disrupted.	15–25 mm but also depends on number of cracks	4 – Severe

Source: Reproduced with the permission of Standards Australia Limited © 2011. Copyright in AS 2870-2011 Residential slabs and footings vests in Standards Australia Limited.

Warning: Although this Building Technology Resource deals with cracking in buildings, it should be said that subfloor moisture can result in the development of other problems, notably:

- Water that is transmitted into masonry, metal or timber building elements causes damage and/or decay to those elements.
- High subfloor humidity and moisture content create an ideal environment for various pests, including termites and spiders, and mould.
- Where high moisture levels are transmitted to the flooring and walls, an increase in the dust mite count can ensue within the living areas. Dust mites, as well as dampness in general, can be a health hazard to inhabitants, particularly those who are abnormally susceptible to respiratory ailments.

THE GARDEN

The ideal vegetation layout is to have lawn or plants that require only light watering immediately adjacent to the drainage or paving edge, then more demanding plants, shrubs and trees spread out in that order.

Overwatering due to misuse of automatic watering systems is a common cause of saturation and water migration under footings. If it is necessary to use these systems, it is important to remove garden beds to a completely safe distance from buildings.

EXISTING TREES

Where a tree is causing a problem of soil drying or there is the existence or threat of upheaval of footings, if the offending roots are subsidiary and their removal will not significantly damage the tree, they should be severed and a concrete or metal barrier placed vertically in the soil to prevent future root growth in the direction of the building. If it is not possible to remove the relevant roots without damage to the tree, an application to remove the tree should be made to the local authority. A prudent plan is to transplant likely offenders before they become a problem.

INFORMATION ON TREES, PLANTS AND SHRUBS

State departments overseeing agriculture can give information regarding root patterns, volume of water needed and safe distance from buildings of most species. Botanic gardens are also sources of information.

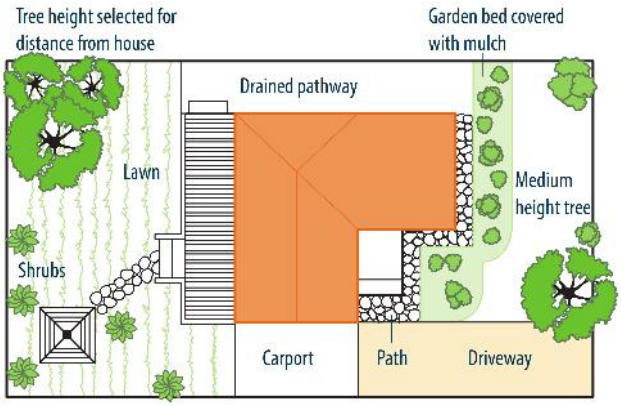

FIGURE 2 Gardens for a reactive site.

EXCAVATION

Excavation around footings must be properly engineered. Soil supporting footings can only be safely excavated at an angle that allows the soil under the footing to remain stable. This angle is called the angle of repose (or friction) and varies significantly between soil types and conditions. Removal of soil within the angle of repose will cause subsidence.

REMEDIATION

Where erosion has occurred that has washed away soil adjacent to footings, soil of the same classification should be introduced and compacted to the same density. Where footings have been undermined, augmentation or other specialist work may be required. Remediation of footings and foundations is generally the realm of a specialist consultant.

Where isolated footings rise and fall because of swell/shrink effect, the home owner may be tempted to alleviate floor bounce by filling the gap that has appeared between the bearer and the pier with blocking. The danger here is that when the next swell segment of the cycle occurs, the extra blocking will push the floor up into an accentuated dome and may also cause local shear failure in the soil. If it is necessary to use blocking, it should be by a pair of fine wedges and monitoring should be carried out fortnightly.

CSIROPUBLISHING

1300 788 000 | +61 3 9545 8400 | publishing.sales@csiro.au | www.publish.csiro.au
For information about CSIRO testing services visit www.csiro.au/en/work-with-us/services
ISBN 9781486312962 (print)/9781486312979 (digital) © CSIRO 2021
(replaces Building Technology File 18, 18-2011 and Information Sheet 10/91)
Unauthorised copying of this material is prohibited.

IMPORTANT DISCLAIMER: This information is prepared for Australia and general in nature. It may be incomplete or inapplicable in some cases.
Laws and regulations may vary in different places. Seek specialist advice for your particular circumstances.
To the extent permitted by law, CSIRO excludes all liability to any person for any loss, damage, cost or other consequence that may result from using this information.

© CSIRO 2021

TERMS AND CONDITIONS: BUILDING TECHNOLOGY RESOURCES

CONDITIONS OF USE

This publication may only be used in accordance with the following terms:

1. CSIRO (which for the purposes of these terms includes CSIRO Publishing) and its licensees own the copyright in the publication and will retain all rights, title and interest in and to the publication.
2. Once downloaded, the downloaded PDF publication may be provided by the user that initially downloads the PDF publication to other users by electronic mail once for each user licence purchased subject and pursuant to paragraph 4 below. The publication may not otherwise be copied or circulated electronically, including, for the avoidance of doubt, by electronic mail, even for internal use.
3. The downloaded publication may be printed, but the number of copies that may be printed is limited to the number of user licences purchased. That is, each user may print one (1) copy of the publication only.
4. The number of user licences purchased is shown on the tax invoice provided at the time of purchase. For the avoidance of doubt, the user that initially downloads the PDF publication shall be taken to be one (1) user. For example, if two (2) user licences are purchased, the publication may only be shared once to one (1) other user and printed once by each user (i.e. a maximum of two (2) hardcopy versions of the publication may be printed).
5. The publication (whether in PDF or printed format) may only be used for personal, internal, non-commercial purposes.
6. The publication and all its content is subject to copyright and unauthorised copying is prohibited.
7. Reproduction, renting, leasing, re-selling, sub-licensing, assignment or any supply of the publication, in print or electronically, is not permitted.
8. Retransmission, caching, networking or posting of the downloaded PDF publication is strictly prohibited.
9. Content may not be extracted for any reason and derivative works based on the publication are not permitted. The publication and any of its content may not be copied, reformatted, adapted, modified, translated, merged, reverse engineered, decompiled, dissembled or changed in any way and otherwise must not be used in a manner that would infringe the copyrights therein.
10. Ownership, copyright, trade mark, confidentiality or other marks or legends (including any digital watermark or similar) on or in the publication must not be removed, altered or obscured.
11. The security of the publication mut be protected at all times.
12. CSIRO will not provide any updating service for the publication. That is, purchasing the publication only entitles access to the publication as current at the date of purchase and does not entitle access to any amended, changed or updated version of the publication. CSIRO is not obliged to notify purchasers or users if the publication is amended, changed, updated or withdrawn after purchase.
13. If you purchased this publication via the CSIRO Publishing website, the PDF publication will remain available on the CSIRO Publishing website for 48 hours after purchasing. In the event of a communication problem during downloading, re-download the publication within 48 hours of purchase. After that time, the publication will no longer be accessible via the CSIRO Publishing website.
14. The right to use this publication pursuant to these terms will continue indefinitely, but will terminate automatically and without notice for any failure to comply with these terms. Upon termination all copies of the publication must be deleted and/or destroyed.
15. CSIRO nor any other person, to the extent permitted by law, has made or makes any representation or warranty of any kind in relation to the publication.
16. Without limiting the foregoing in any way, the information contained in the publication is general in nature. It may be incomplete or inapplicable in some cases. Laws and regulations may vary in different places. Seek specialist advice for your particular circumstances.
17. To the extent permitted by law, CSIRO excludes all liability to any person for any loss, damage, cost or other consequence that may result from using this publication and the information in it.
18. For reproduction of the publication or any portions or other use outside the circumstances set out in these terms, prior written permission of CSIRO must be sought. Please contact: publishing@csiro.au

TEST PIT LOG

CLIENT: Capital Estate Developments Pty Ltd
PROJECT: Proposed Residential Subdivision
LOCATION: Stage 7 Denman North Estate, Denman Prospect

SURFACE LEVEL: 584 AHD
COORDINATE: E:200940, N:602825
DATUM/GRID: ACT Stromlo
DIP/AZIMUTH: 90°/---°

LOCATION ID: 80
PROJECT No: 88231.60
DATE: 06/08/24
SHEET: 1 of 1

CONDITIONS ENCOUNTERED								SAMPLE				TESTING AND REMARKS	
GROUNDWATER	RL (m)	DEPTH (m)	DESCRIPTION OF STRATA	GRAPHIC	ORIGIN(#)	CONSIS.(*) / DENSITY.(*)	MOISTURE	REMARKS	TYPE	INTERVAL	DEPTH (m)	TEST TYPE	RESULTS AND REMARKS
06/08/24 No free groundwater observed			FILL / Silty Sandy CLAY (CL): brown; low plasticity; fine to coarse sand.		FILL	NA	w<PL						
		0.20	FILL / Sandy Gravelly CLAY (CL), trace silt: brown; low plasticity; fine to coarse sand; fine to coarse gravel.										
	583								D		0.50		
			0.80m-0.90m: pocket of high plasticity clay		FILL	(VSt) to (H)	w<PL						
									D		0.85		
		1							D		1.00		
	582		Test Pit discontinued at 1.30m depth. Slow progress in hard gravelly fill.										

NOTES: (#) Soil origin is "probable" unless otherwise stated. (*) Consistency/Relative density shading is for visual reference only - no correlation between cohesive and granular materials is implied.

PLANT: CAT 306 CR mini excavator
OPERATOR: Bingley Electrical Pty Ltd
LOGGED: Miller
METHOD: 300mm wide bucket
REMARKS: Surface levels and coordinates are approximate only and must not be relied upon.

Refer to explanatory notes for symbol and abbreviation definitions

Douglas PARTNERS

Generated with CORE-GS by Geroc - Soil Log

TEST PIT LOG

CLIENT: Capital Estate Developments Pty Ltd
PROJECT: Proposed Residential Subdivision
LOCATION: Stage 7 Denman North Estate, Denman Prospect

SURFACE LEVEL: 584 AHD
COORDINATE: E:200926, N:602844
DATUM/GRID: ACT Stromlo
DIP/AZIMUTH: 90°/---°

LOCATION ID: 81
PROJECT No: 88231.60
DATE: 06/08/24
SHEET: 1 of 1

CONDITIONS ENCOUNTERED								SAMPLE				TESTING AND REMARKS	
GROUNDWATER	RL (m)	DEPTH (m)	DESCRIPTION OF STRATA	GRAPHIC	ORIGIN(#)	CONSIS.(*) DENSITY.(*)	MOISTURE	REMARKS	TYPE	INTERVAL	DEPTH (m)	TEST TYPE	RESULTS AND REMARKS
06/08/24 No free groundwater observed			TOPSOIL / Silty Sandy CLAY (CL): brown; low plasticity; fine to coarse sand. FILL.		TOP and FILL	NA	w<PL						
		0.20	FILL / Sandy Gravelly CLAY (CL), trace silt, trace cobbles: brown; low plasticity; fine to coarse sand; fine to coarse gravel.		FILL	(VSt) to (H)	w<PL		D		0.50		
	583												
		1							D		1.00		
		1.10	FILL / Sandy CLAY (CL-CI): grey brown; low to medium plasticity; fine to coarse sand; pockets of high plasticity clay.		FILL	(VSt)	w<PL to w=PL		D		1.30		
	582												
			Test Pit discontinued at 1.70m depth. Limit of investigation.										

NOTES: (#) Soil origin is "probable" unless otherwise stated. (*) Consistency/Relative density shading is for visual reference only - no correlation between cohesive and granular materials is implied.

PLANT: CAT 306 CR mini excavator
OPERATOR: Bingley Electrical Pty Ltd
LOGGED: Miller
METHOD: 300mm wide bucket
REMARKS: Surface levels and coordinates are approximate only and must not be relied upon.

Refer to explanatory notes for symbol and abbreviation definitions

Douglas PARTNERS

Generated with CORE-GS by Geroc - Soil Log

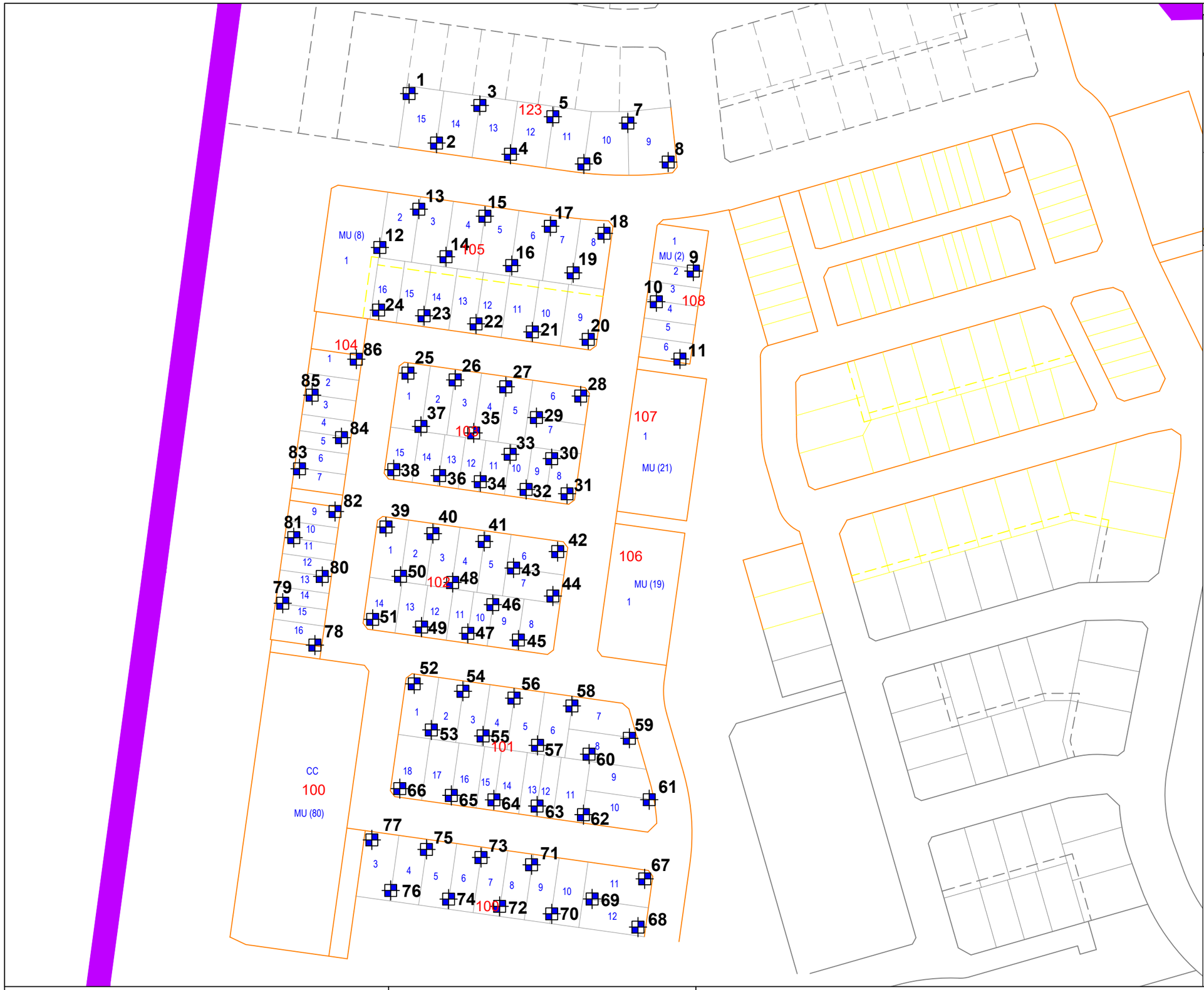

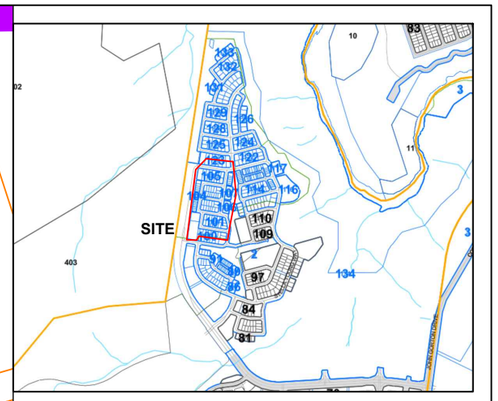

Locality Plan

LEGEND

Test Pit Location

0 17.5 35 52.5 70 87.5

1:1750 @ A3

NOTE: Base drawing from Huon
(Drawing Depth Range Plot, dated 8 June 2023)

Douglas PARTNERS

GROUNDED EXPERTISE

CLIENT: Capital Estate Developments Pty Ltd	TITLE: **Test Location Plan**	PROJECT No: 88231.60	
OFFICE: Canberra / DRAWN BY: FM	**Proposed Residential Subdivision**	DRAWING No: 1	
SCALE: As Shown / DATE: 28.05.2024	**Stage 7 Denman North Estate, Denman Prospect**	REVISION: 0	

SITE CLASSIFICATION REPORT SUMMARY

BLOCK:	**13**	**SECTION:**	**104**	**SUBURB:**	**Denman Prospect**
JOB No:	**88231.60**			**DATE:**	**September 2025**
CLIENT:	**Capital Estate Developments Pty Ltd**			**REF:**	**R.069.Rev1**

Classification Procedures:

Existing Subsurface Conditions: Refer attached test pit log(s) – Pit(s) 79,80 and Drawing 1 Rev1.

Bulk Earthworks: Based on Douglas Partners records, controlled fill was placed within the block under Level 1 control as defined in AS 3798:2007 during subdivision construction.

Laboratory Results: Previous laboratory testing results indicated liquid limit ranging from 25-80%, plasticity index ranging from 12-57% and linear shrinkage ranging from 6-20%.

Site Classification: Site classification in accordance with AS2870:2011 provides guidance on the patterns and magnitude of moisture related seasonal ground movements that must be considered in design. Based on the current soil profile / state, on limited subsurface information, soil reactivity and allowing for variation in the subsoil profile, the soil profile would be equivalent to Class M* (moderately reactive/filled) conditions. The site classification must be reassessed should the subsurface profile change by either cutting or filling and/or if the presence of service trenches, retaining walls or submerged structures are within the zone of influence of the proposed footings. Reference must be made to the comments provided below.

Footing Systems: Reference must be made to AS2870:2011 which indicates footing systems that are appropriate for each site classification. All footings must found within a uniform bearing stratum of suitable strength/material, below the zone of influence of any service trenches, backfill zones, retaining walls or underground structures. Masonry walls should be articulated in accordance with current best practice. Dwelling design must ensure suitable drainage and uniform moisture conditions are maintained in the vicinity of footings. Footing systems must be confirmed by a structural engineer taking into consideration any onsite or offsite constraints.

Maintenance Guidelines: Reference should be made to the attached CSIRO Sheet BTF 18 'Foundation Maintenance & Footing Performance' to comments about gardens, landscaping and trees on the performance of foundation soils and in particular in respect to maintaining good surface drainage. It notes that minor cracking in most structures is inevitable, and it describes site maintenance practices aimed at minimising foundation movements that can lead to cracking damage.

Comments/Limitations:

The successful purchaser must make their own interpretations, deductions and conclusions from the information made available and will need to accept full responsibility for such interpretations, deductions and conclusions. To that end development specific geotechnical investigations must be undertaken and it is recommended that footing excavations be inspected by a geotechnical engineer.

Some variability in subsurface conditions must be anticipated with the possibility additional topsoils / fill may have been spread subsequent to the investigation.

Site preparation prior to the construction should include removal of all vegetation, topsoil and any uncontrolled fill and all new fill must be placed under controlled conditions (AS 3798:2007), otherwise Class P conditions would be warranted in those fill areas. Some remnant tree roots may still be present within the natural profile, generally embedded within the weathered rock, at the existing ground surface or below any controlled fill.

Depending on the depth of site cut and trenches, rock excavation may be required.

Moisture condition of site soils and/or the presence of groundwater may vary considerably from time of investigation compared to at the time of construction. Groundwater seepages are highly likely after heavy or prolonged rain.

Drainage works to control groundwater seepages have been installed during the subdivision construction. The successful purchaser should seek advice from the developer before any construction works.

This report must be read in conjunction with the attached "Limitations" and notes "About this Report".

References:

AS 2870:2011, Residential Slabs and Footings, Standards Australia.

AS 3798:2007, Guidelines on Earthworks for Commercial and Residential Developments, Standards Australia.

Attachments:

Limitations & About this Report	Test Pit Log(s) Pit(s) 79,80
Explanatory Notes	Drawing 1 Rev1

A Hirsch

Written by: Alastair Hirsch

Reviewed by: Michael Jones

Douglas PARTNERS | GROUNDED EXPERTISE

Limitations:

Douglas Partners Pty Ltd (Douglas) has prepared this report for this project at Stage 7 Denman North Estate, Denman Prospect ACT in line with Douglas' proposal 88231.42.P.001.Rev1 dated 10 November 2022 and acceptance received from Capital Estate Developments Pty Ltd dated 10 November 2022. The work was carried out under Douglas' Engagement Terms. This report is provided for the exclusive use of Capital Estate Developments Pty Ltd for this project only and for the purposes as described in the report. It should not be used by or relied upon for other projects or purposes on the same or other site or by a third party. Any party so relying upon this report beyond its exclusive use and purpose as stated above, and without the express written consent of Douglas, does so entirely at its own risk and without recourse to Douglas for any loss or damage. In preparing this report Douglas has necessarily relied upon information provided by the client and/or their agents.

The results provided in the report are indicative of the sub-surface conditions on the site only at the specific sampling and/or testing locations, and then only to the depths investigated and at the time the work was carried out. Sub-surface conditions can change abruptly due to variable geological processes and also as a result of human influences. Such changes may occur after Douglas' field testing has been completed.

Douglas' advice is based upon the conditions encountered during this investigation. The accuracy of the advice provided by Douglas in this report may be affected by undetected variations in ground conditions across the site between and beyond the sampling and/or testing locations. The advice may also be limited by budget constraints imposed by others or by site accessibility.

The assessment of atypical safety hazards arising from this advice is restricted to the geotechnical components set out in this report and based on known project conditions and stated design advice and assumptions. While some recommendations for safe controls may be provided, detailed 'safety in design' assessment is outside the current scope of this report and requires additional project data and assessment.

The scope of work for this investigation/report did not include the assessment of surface or sub-surface materials or groundwater for contaminants, within or adjacent to the site. Should evidence of fill of unknown origin be noted in the report, and in particular the presence of building demolition materials, it should be recognised that there may be some risk that such fill may contain contaminants and hazardous building materials.

This report must be read in conjunction with all of the attached and should be kept in its entirety without separation of individual pages or sections. Douglas cannot be held responsible for interpretations or conclusions made by others unless they are supported by an expressed statement, interpretation, outcome or conclusion stated in this report.

This report, or sections from this report, should not be used as part of a specification for a project, without review and agreement by Douglas. This is because this report has been written as advice and opinion rather than instructions for construction.

About this Report

November 2023

Introduction

These notes have been provided to amplify DP's report in regard to classification methods, field procedures and the comments section. Not all are necessarily relevant to all reports.

DP's reports are based on information gained from limited subsurface excavations and sampling, supplemented by knowledge of local geology and experience. For this reason, they must be regarded as interpretive rather than factual documents, limited to some extent by the scope of information on which they rely.

Copyright

This report is the property of Douglas Partners Pty Ltd. The report may only be used for the purpose for which it was commissioned and in accordance with the Conditions of Engagement for the commission supplied at the time of proposal. Unauthorised use of this report in any form whatsoever is prohibited.

Borehole and Test Pit Logs

The borehole and test pit logs presented in this report are an engineering and/or geological interpretation of the subsurface conditions, and their reliability will depend to some extent on frequency of sampling and the method of drilling or excavation. Ideally, continuous undisturbed sampling or core drilling will provide the most reliable assessment, but this is not always practicable or possible to justify on economic grounds. In any case the boreholes and test pits represent only a very small sample of the total subsurface profile.

Interpretation of the information and its application to design and construction should therefore take into account the spacing of boreholes or pits, the frequency of sampling, and the possibility of other than 'straight line' variations between the test locations.

Groundwater

Where groundwater levels are measured in boreholes there are several potential problems, namely:

- In low permeability soils groundwater may enter the hole very slowly or perhaps not at all during the time the hole is left open;
- A localised, perched water table may lead to an erroneous indication of the true water table;
- Water table levels will vary from time to time with seasons or recent weather changes. They may not be the same at the time of construction as are indicated in the report; and
- The use of water or mud as a drilling fluid will mask any groundwater inflow. Water has to be blown out of the hole and drilling mud must first be washed out of the hole if water measurements are to be made.

More reliable measurements can be made by installing standpipes which are read at intervals over several days, or perhaps weeks for low permeability soils. Piezometers, sealed in a particular stratum, may be advisable in low permeability soils or where there may be interference from a perched water table.

Reports

The report has been prepared by qualified personnel, is based on the information obtained from field and laboratory testing, and has been undertaken to current engineering standards of interpretation and analysis. Where the report has been prepared for a specific design proposal, the information and interpretation may not be relevant if the design proposal is changed. If this happens, DP will be pleased to review the report and the sufficiency of the investigation work.

Every care is taken with the report as it relates to interpretation of subsurface conditions, discussion of geotechnical and environmental aspects, and recommendations or suggestions for design and construction. However, DP cannot always anticipate or assume responsibility for:

- Unexpected variations in ground conditions. The potential for this will depend partly on borehole or pit spacing and sampling frequency;
- Changes in policy or interpretations of policy by statutory authorities; or
- The actions of contractors responding to commercial pressures.

If these occur, DP will be pleased to assist with investigations or advice to resolve the matter.

continued next page

About this Report

Site Anomalies

In the event that conditions encountered on site during construction appear to vary from those which were expected from the information contained in the report, DP requests that it be immediately notified. Most problems are much more readily resolved when conditions are exposed rather than at some later stage, well after the event.

Information for Contractual Purposes

Where information obtained from this report is provided for tendering purposes, it is recommended that all information, including the written report and discussion, be made available. In circumstances where the discussion or comments section is not relevant to the contractual situation, it may be appropriate to prepare a specially edited document. DP would be pleased to assist in this regard and/or to make additional report copies available for contract purposes at a nominal charge.

Site Inspection

The company will always be pleased to provide engineering inspection services for geotechnical and environmental aspects of work to which this report is related. This could range from a site visit to confirm that conditions exposed are as expected, to full time engineering presence on site.

intentionally blank

intentionally blank

Terminology, Symbols and Abbreviations

November 2023

Introduction to Terminology, Symbols and Abbreviations

Douglas Partners' reports, investigation logs, and other correspondence may use terminology which has quantitative or qualitative connotations. To remove ambiguity or uncertainty surrounding the use of such terms, the following sets of notes pages may be attached Douglas Partners' reports, depending on the work performed and conditions encountered:

- Soil Descriptions;
- Rock Descriptions; and
- Sampling, insitu testing, and drilling methodologies

In addition to these pages, the following notes generally apply to most documents.

Abbreviation Codes

Site conditions may also be presented in a number of different formats, such as investigation logs, field mapping, or as a written summary. In some of these formats textual or symbolic terminology may be presented using textual abbreviation codes or graphic symbols, and, where commonly used, these are listed alongside the terminology definition. For ease of identification in these note pages, textual codes are presented in these notes in the following style XW. Code usage conforms with the following guidelines:

- Textual codes are case insensitive, although herein they are generally presented in upper case; and
- Textual codes are contextual (i.e. the same or similar combinations of characters may be used in different contexts with different meanings (for example `PL` is used for plastic limit in the context of soil moisture condition, as well as in `PL(A)` for point load test result in the testing results column)).

Data Integrity Codes

Subsurface investigation data recorded by Douglas Partners is generally managed in a highly structured database environment, where records "span" between a top and bottom depth interval. Depth interval "gaps" between records are considered to introduce ambiguity, and, where appropriate, our practice guidelines may require contiguous data sets. Recording meaningful data is not always appropriate (for example assigning a "strength" to a concrete pavement) and the following codes may be used to maintain contiguity in such circumstances.

Term	Description	Abbreviation Code
Core loss	No core recovery	KL
Unknown	Information was not available to allow classification of the property. For example, when auguring in loose, saturated sand auger cuttings may not be returned.	UK
No data	Information required to allow classification of the property was not available. For example if drilling is commenced from the base of a hole predrilled by others	ND
Not Applicable	Derivation of the properties not appropriate or beyond the scope of the investigation. For example providing a description of the strength of a concrete pavement	NA

Graphic Symbols

Douglas Partners' logs contain a "graphic" column which provides a pictorial representation of the basic composition of the material. The symbols used are directly representing the material name stated in the adjacent "Description of Strata" column, and as such no specific graphic symbology legend has been provided in these notes.

intentionally blank

Soil Descriptions

Introduction

All materials which are not considered to be "in-situ rock" are described in general accordance with the soil description model of AS 1726-2017 Part 6.1.3, and can be broken down into the following description structure:

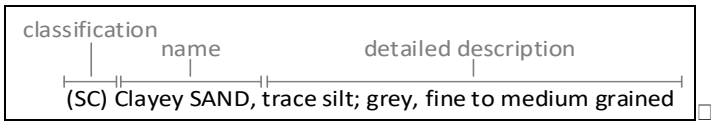

The "classification" comprises a two character "group symbol" providing a general summary of dominant soil characteristics. The "name" summarises the particle sizes within the soil which most influence its behaviour. The detailed description presents more information about composition, condition, structure, and origin of the soil.

Classification, naming and description of soils require the relative proportion of particles of different sizes within the whole soil mixture to be considered.

Particle size designation and Behaviour Model

Solid particles within a soil are differentiated on the basis of size.

The engineering behaviour properties of a soil can subsequently be modelled to be either "fine grained" (also known as "cohesive" behaviour) or "coarse grained" ("non cohesive" behaviour), depending on the relative proportion of fine or coarse fractions in the soil mixture.

Particle Size Designation	Particle Size (mm)	Behaviour Model	
		Behaviour	Approximate Dry Mass
Boulder	>200	Excluded from particle behaviour model as "oversize"	
Cobble	63 - 200		
Gravel[1]	2.36 - 63	Coarse	>65%
Sand[1]	0.075 - 2.36		
Silt	0.002 - 0.075	Fine	>35%
Clay	<0.002		

[1] – refer grain size subdivision descriptions below

The behaviour model boundaries defined above are not precise, and the material behaviour should be assumed from the name given to the material (which considers the particle fraction which dominates the behaviour, refer "component proportions" below), rather than strict observance of the proportions of particle sizes. For example, if a material is named a "Sandy CLAY", this is indicative that the material exhibits fine grained behaviour, even if the dry mass of coarse grained material may exceed 65%.

Component proportions

The relative proportion of the dry mass of each particle size fraction is assessed to be a "primary", "secondary", or "minor" component of the soil mixture, depending on its influence over the soil behaviour.

Component Proportion Designation	Definition[1]	Relative Proportion	
		In Fine Grained Soil	In Coarse Grained Soil
Primary	The component (particle size designation, refer above) which dominates the engineering behaviour of the soil	The clay/silt component with the greater proportion	The sand/gravel component with the greater proportion
Secondary	Any component which is not the primary, but is significant to the engineering properties of the soil	Any component with greater than 30% proportion	Any granular component with greater than 30%; or Any fine component with greater than 12%
Minor[2]	Present in the soil, but not significant to its engineering properties	All other components	All other components

[1] As defined in AS1726-2017 6.1.4.4

[2] In the detailed material description, minor components are split into two further sub-categories. Refer "identification of minor components" below.

Composite Materials

In certain situations, a lithology description may describe more than one material, for example, collectively describing a layer of interbedded sand and clay. In such a scenario, the two materials would be described independently, with the names preceded or followed by a statement describing the arrangement by which the materials co-exist. For example, "INTERBEDDED Silty CLAY AND SAND".

Soil Descriptions

Classification

The soil classification comprises a two character group symbol. The first character identifies the primary component. The second character identifies either the grading or presence of fines in a coarse grained soil, or the plasticity in a fine grained soil. Refer AS1726-2017 6.1.6 for further clarification.

Soil Name

For most soils, the name is derived with the primary component included as the noun (in upper case), preceded by any secondary components stated in an adjective form. In this way, the soil name also describes the general composition and indicates the dominant behaviour of the material.

Component [1]	Prominence in Soil Name
Primary	Noun (eg "CLAY")
Secondary	Adjective modifier (eg "Sandy")
Minor	No influence

[1] – for determination of component proportions, refer component proportions on previous page

For materials which cannot be disaggregated, or which are not comprised of rock or mineral fragments, the names "ORGANIC MATTER" or "ARTIFICIAL MATERIAL" may be used, in accordance with AS1726-2017 Table 14.

Commercial or colloquial names are not used for the soil name where a component derived name is possible (for example "Gravelly SAND" rather than "CRACKER DUST").

Materials of "fill" or "topsoil" origin are generally assigned a name derived from the primary/secondary component (where appropriate). In log descriptions this is preceded by uppercase "FILL" or "TOPSOIL". Origin uncertainty is indicated in the description by the characters (?), with the degree of uncertainty described (using the terms "probably" or "possibly" in the origin column, or at the end of the description).

Identification of minor components

Minor components are identified in the soil description immediately following the soil name. The minor component fraction is usually preceded with a term indicating the relative proportion of the component.

Minor Component Proportion Term	Relative Proportion	
	In Fine Grained Soil	In Coarse Grained Soil
With	All fractions: 15-30%	Clay/silt: 5-12% sand/gravel: 15-30%
Trace	All fractions: 0-15%	Clay/silt: 0-5% sand/gravel: 0-15%

The terms "with" and "trace" generally apply only to gravel or fine particle fractions. Where cobbles/boulders are encountered in minor proportions (generally less than about 12%) the term "occasional" may be used. This term describes the sporadic distribution of the material within the confines of the investigation excavation only, and there may be considerable variation in proportion over a wider area which is difficult to factually characterise due to the relative size of the particles and the investigation methods.

Soil Composition

Plasticity

Descriptive Term	Laboratory liquid limit range	
	Silt	Clay
Non-plastic materials	Not applicable	Not applicable
Low plasticity	≤50	≤35
Medium plasticity	Not applicable	>35 and ≤50
High plasticity	>50	>50

Note, Plasticity descriptions generally describe the plasticity behaviour of the whole of the fine grained soil, not individual fine grained fractions.

Grain Size

Type		Particle size (mm)
Gravel	Coarse	19 - 63
	Medium	6.7 - 19
	Fine	2.36 – 6.7
Sand	Coarse	0.6 - 2.36
	Medium	0.21 - 0.6
	Fine	0.075 - 0.21

Grading

Grading Term	Particle size (mm)
Well	A good representation of all particle sizes
Poorly	An excess or deficiency of particular sizes within the specified range
Uniformly	Essentially of one size
Gap	A deficiency of a particular size or size range within the total range

Note, AS1726-2017 provides terminology for additional attributes not listed here.

Soil Descriptions

Soil Condition

Moisture

The moisture condition of soils is assessed relative to the plastic limit for fine grained soils, while for coarse grained soils it is assessed based on the appearance and feel of the material. The moisture condition of a material is considered to be independent of stratigraphy (although commonly these are related), and this data is presented in its own column on logs.

Applicability	Term	Tactile Assessment	Abbreviation code
Fine	Dry of plastic limit	Hard and friable or powdery	w<PL
	Near plastic limit	Can be moulded	w=PL
	Wet of plastic limit	Water residue remains on hands when handling	w>PL
	Near liquid limit	"oozes" when agitated	w=LL
	Wet of liquid limit	"oozes"	w>LL
Coarse	Dry	Non-cohesive and free running	D
	Moist	Feels cool, darkened in colour, particles may stick together	M
	Wet	Feels cool, darkened in colour, particles may stick together, free water forms when handling	W

The abbreviation code NDF, meaning "not-assessable due to drilling fluid use" may also be used.

Note, observations relating to free ground water or drilling fluids are provided independent of soil moisture condition.

Consistency/Density/Compaction/Cementation/Extremely Weathered Material

These concepts give an indication of how the material may respond to applied forces (when considered in conjunction with other attributes of the soil). This behaviour can vary independent of the composition of the material, and on logs these are described in an independent column and are generally mutually exclusive (i.e it is inappropriate to describe both consistency and compaction at the same time). The method by which the behaviour is described depends on the behaviour model and other characteristics of the soil as follows:

- In fine grained soils, the "consistency" describes the ease with which the soil can be remoulded, and is generally correlated against the materials undrained shear strength;
- In granular materials, the relative density describes how tightly packed the particles are, and is generally correlated against the density index;
- In anthropogenically modified materials, the compaction of the material is described qualitatively;
- In cemented soils (both natural and anthropogenic), the cemented "strength" is described qualitatively, relative to the difficulty with which the material is disaggregated; and
- In soils of extremely weathered material origin, the engineering behaviour may be governed by relic rock features, and expected behaviour needs to be assessed based the overall material description.

Quantitative engineering performance of these materials may be determined by laboratory testing or estimated by correlated field tests (for example penetration or shear vane testing). In some cases, performance may be assessed by tactile or other subjective methods, in which case investigation logs will show the estimated value enclosed in round brackets, for example (VS).

Consistency (fine grained soils)

Consistency Term	Tactile Assessment	Undrained Shear Strength (kPa)	Abbreviation Code
Very soft	Extrudes between fingers when squeezed	<12	VS
Soft	Mouldable with light finger pressure	>12 - ≤25	S
Firm	Mouldable with strong finger pressure	>25 - ≤50	F
Stiff	Cannot be moulded by fingers	>50 - ≤100	St
Very stiff	Indented by thumbnail	>100 - ≤200	VSt
Hard	Indented by thumbnail with difficulty	>200	H
Friable	Easily crumbled or broken into small pieces by hand	-	Fr

Relative Density (coarse grained soils)

Relative Density Term	Density Index	Abbreviation Code
Very loose	<15	VL
Loose	>15 - ≤35	L
Medium dense	>35 - ≤65	MD
Dense	>65 - ≤85	D
Very dense	>85	VD

Note, tactile assessment of relative density is difficult, and generally requires penetration testing, hence a tactile assessment guide is not provided

Soil Descriptions

Compaction (anthropogenically modified soil)

Compaction Term	Abbreviation Code
Well compacted	WC
Poorly compacted	PC
Moderately compacted	MC
Variably compacted	VC

Cementation (natural and anthropogenic)

Cementation Term	Abbreviation Code
Moderately cemented	MOD
Weakly cemented	WEK

Extremely Weathered Material

AS1726-2017 considers weathered material to be soil if the unconfined compressive strength is less than 0.6 MPa (i.e. less than very low strength rock). These materials may be identified as "extremely weathered material" in reports and by the abbreviation code XWM on log sheets. This identification is not correlated to any specific qualitative or quantitative behaviour, and the engineering properties of this material must therefore be assessed according to engineering principles with reference to any relic rock structure, fabric, or texture described in the description.

Soil Origin

Term	Description	Abbreviation Code
Residual	Derived from in-situ weathering of the underlying rock	RS
Extremely weathered material	Formed from in-situ weathering of geological formations. Has strength of less than 'very low' as per as1726 but retains the structure or fabric of the parent rock.	XWM
Alluvial	Deposited by streams and rivers	ALV
Fluvial	Deposited by channel fill and overbank (natural levee, crevasse splay or flood basin)	FLV
Estuarine	Deposited in coastal estuaries	EST
Marine	Deposited in a marine environment	MAR
Lacustrine	Deposited in freshwater lakes	LAC
Aeolian	Carried and deposited by wind	AEO
Colluvial	Soil and rock debris transported down slopes by gravity	COL
Slopewash	Thin layers of soil and rock debris gradually and slowly deposited by gravity and possibly water	SW
Topsoil	Mantle of surface soil, often with high levels of organic material	TOP
Fill	Any material which has been moved by man	FILL
Littoral	Deposited on the lake or seashore	LIT
Unidentifiable	Not able to be identified	UID

Cobbles and Boulders

The presence of particles considered to be "oversize" may be described using one of the following strategies:

- Oversize encountered in a minor proportion (when considered relative to the wider area) are noted in the soil description; or
- Where a significant proportion of oversize is encountered, the cobbles/boulders are described independent of the soil description, in a similar manner to composite soils (described above) but qualified with "MIXTURE OF".

intentionally blank

Rock Strength

Rock strength is defined by the unconfined compressive strength, and it refers to the strength of the rock substance and not the strength of the overall rock mass, which may be considerably weaker due to defects.

The Point Load Strength Index $I_{s(50)}$ is commonly used to provide an estimate of the rock strength and site specific correlations should be developed to allow UCS values to be determined. The point load strength test procedure is described by Australian Standard AS4133.4.1-2007. The terms used to describe rock strength are as follows:

Strength Term	Unconfined Compressive Strength (MPa)	Point Load Index[1] $I_{s(50)}$ MPa	Abbreviation Code
Very low	0.6 - 2	0.03 - 0.1	VL
Low	2 - 6	0.1 - 0.3	L
Medium	6 - 20	0.3 - 1.0	M
High	20 - 60	1 - 3	H
Very high	60 - 200	3 - 10	VH
Extremely high	>200	>10	EH

[1] Rock strength classification is based on UCS. The UCS to $I_{s(50)}$ ratio varies significantly for different rock types and specific ratios may be required for each site. The point load Index ranges shown above are as suggested in AS1726 and should not be relied upon without supporting evidence.

The following abbreviation codes are used for soil layers or seams of material "within rock" but for which the equivalent UCS strength is less than 0.6 MPa.

Scenario	Abbreviation Code
The material encountered has an equivalent UCS strength of less than 0.6 MPa, and therefore is considered to be soil (as per Note 1 of Table 20 of AS 1726-2017). The properties of the material encountered over this interval are described in the "Description of Strata" and soil properties columns.	SOIL
The material encountered has an equivalent UCS strength of less than 0.6 MPa, and therefore is considered to be soil (as per Note 1 of Table 20 of AS 1726-2017). The prominence of the material is such that it can be considered to be a seam (as defined in Table 22 of AS1726-2017) and the properties of the material are described in the defect column.	SEAM

Degree of Weathering

The degree of weathering of rock is classified as follows:

Weathering Term	Description	Abbreviation Code
Residual Soil[1]	Material is weathered to such an extent that it has soil properties. Mass structure and material texture and fabric of original rock are no longer visible, but the soil has not been significantly transported.	RS
Extremely weathered[1]	Material is weathered to such an extent that it has soil properties. Mass structure and material texture and fabric of original rock are still visible	XW
Highly weathered	The whole of the rock material is discoloured, usually by iron staining or bleaching to the extent that the colour of the original rock is not recognisable. Rock strength is significantly changed by weathering. Some primary minerals have weathered to clay minerals. Porosity may be increased by leaching or may be decreased due to deposition of weathering products in pores.	HW
Moderately weathered	The whole of the rock material is discoloured, usually by iron staining or bleaching to the extent that the colour of the original rock is not recognisable but shows little or no change of strength from fresh rock.	MW
Slightly weathered	Rock is partially discoloured with staining or bleaching along joints but shows little or no change of strength from fresh rock.	SW
Fresh	No signs of decomposition or staining.	FR
Note: If HW and MW cannot be differentiated use DW (see below)		
Distinctly weathered	Rock strength usually changed by weathering. The rock may be highly discoloured, usually by iron staining. Porosity may be increased by leaching or may be decreased due to deposition of weathered products in pores.	DW

[1] The parent rock type, of which the residual/extremely weathered material is a derivative, will be stated in the description (where discernible).

Degree of Alteration

The degree of alteration of the rock material (physical or chemical changes caused by hot gasses or liquids at depth) is classified as follows:

Term	Description	Abbreviation Code
Extremely altered	Material is altered to such an extent that it has soil properties. Mass structure and material texture and fabric of original rock are still visible.	XA
Highly altered	The whole of the rock material is discoloured, usually by staining or bleaching to the extent that the colour of the original rock is not recognisable. Rock strength is changed by alteration. Some primary minerals are altered to clay minerals. Porosity may be increased by leaching or may be decreased due to precipitation of secondary materials in pores.	HA
Moderately altered	The whole of the rock material is discoloured, usually by staining or bleaching to the extent that the colour of the original rock is not recognisable but shows little or no change of strength from fresh rock.	MA
Slightly altered	Rock is slightly discoloured but shows little or no change of strength from fresh rock	SA
Note: If HA and MA cannot be differentiated use DA (see below)		
Distinctly altered	Rock strength usually changed by alteration. The rock may be highly discoloured, usually by staining or bleaching. Porosity may be increased by leaching or may be decreased due to precipitation of secondary minerals in pores.	DA

Degree of Fracturing

The following descriptive classification apply to the spacing of natural occurring fractures in the rock mass. It includes bedding plane partings, joints and other defects, but excludes drilling breaks. These terms are generally not required on investigation logs where fracture spacing is presented as a histogram, and where used are presented in an unabbreviated format.

Term	Description
Fragmented	Fragments of <20 mm
Highly Fractured	Core lengths of 20-40 mm with occasional fragments
Fractured	Core lengths of 30-100 mm with occasional shorter and longer sections
Slightly Fractured	Core lengths of 300 mm or longer with occasional sections of 100-300 mm
Unbroken	Core contains very few fractures

Rock Quality Designation

The quality of the cored rock can be measured using the Rock Quality Designation (RQD) index, defined as:

$$\text{RQD \%} = \frac{\text{cumulative length of 'sound' core sections} > \text{100 mm long}}{\text{total drilled length of section being assessed}}$$

where 'sound' rock is assessed to be rock of low strength or stronger. The RQD applies only to natural fractures. If the core is broken by drilling or handling (i.e., drilling breaks) then the broken pieces are fitted back together and are not included in the calculation of RQD.

Stratification Spacing

These terms may be used to describe the spacing of bedding partings in sedimentary rocks. Where used, these terms are generally presented in an unabbreviated format

Term	Separation of Stratification Planes
Thinly laminated	< 6 mm
Laminated	6 mm to 20 mm
Very thinly bedded	20 mm to 60 mm
Thinly bedded	60 mm to 0.2 m
Medium bedded	0.2 m to 0.6 m
Thickly bedded	0.6 m to 2 m
Very thickly bedded	> 2 m

Rock Descriptions

Defect Descriptions

Defect Type

Term	Abbreviation Code
Bedding plane	B
Cleavage	CL
Crushed seam	CS
Crushed zone	CZ
Drilling break	DB
Decomposed seam	DS
Drill lift	DL
Extremely Weathered seam	EW
Fault	F
Fracture	FC
Fragmented	FG
Handling break	HB
Infilled seam	IS
Joint	JT
Lamination	LAM
Shear seam	SS
Shear zone	SZ
Vein	VN
Mechanical break	MB
Parting	P
Sheared Surface	S

Rock Defect Orientation

Term	Abbreviation Code
Horizontal	H
Vertical	V
Sub-horizontal	SH
Sub-vertical	SV

Rock Defect Coating

Term	Abbreviation Code
Clean	CN
Coating	CT
Healed	HE
Infilled	INF
Stained	SN
Tight	TI
Veneer	VNR

Rock Defect Infill

Term	Abbreviation Code
Calcite	CA
Carbonaceous	CBS
Clay	CLAY
Iron oxide	FE
Manganese	MN
Pyrite	Py
Secondary material	MS
Silt	M
Quartz	Qz
Unidentified material	MU

Rock Defect Shape/Planarity

Term	Abbreviation Code
Curved	CU
Discontinuous	DIS
Irregular	IR
Planar	PR
Stepped	ST
Undulating	UN

Rock Defect Roughness

Term	Abbreviation Code
Polished	PO
Rough	RF
Smooth	SM
Slickensided	SL
Very rough	VR

Defect Orientation
The inclination of defects is always measured from the perpendicular to the core axis

intentionally blank

Sampling and Testing

A record of samples retained, and field testing performed is usually shown on a Douglas Partners' log with samples appearing to the left of a depth scale, and selected field and laboratory testing (including results, where relevant) appearing to the right of the scale, as illustrated below:

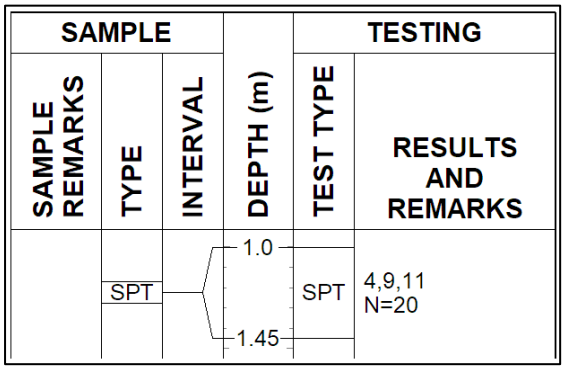

Sampling

The type or intended purpose for which a sample was taken is indicated by the following abbreviation codes.

Sample Type	Code
Auger sample	A
Acid Sulfate sample	ASS
Bulk sample	B
Core sample	C
Disturbed sample	D
Environmental sample	ES
Gas sample	G
Piston sample	P
Sample from SPT test	SPT
Undisturbed tube sample	U[1]
Water sample	W
Material Sample	MT
Core sample for unconfined compressive strength testing	UCS

[1] – numeric suffixes indicate tube diameter/width in mm

The above codes only indicate that a sample was retained, and not that testing was scheduled or performed.

Field and Laboratory Testing

A record that field and laboratory testing was performed is indicated by the following abbreviation codes.

Test Type	Code
Pocket penetrometer (kPa)	PP
Photo ionisation detector (ppm)	PID
Standard Penetration Test x/y = x blows for y mm penetration HB = hammer bouncing HW = fell under weight of hammer	SPT
Shear vane (kPa)	V
Unconfined compressive strength, (MPa)	UCS

Field and laboratory testing (continued)

Test Type	Code
Point load test, (MPa), axial (A), diametric (D), irregular (I)	PLT(_)
Dynamic cone penetrometer, followed by blow count penetration increment in mm (cone tip, generally in accordance with AS1289.6.3.2)	DCP/150
Perth sand penetrometer, followed by blow count penetration increment in mm (flat tip, generally in accordance with AS1289.6.3.3)	PSP/150

Groundwater Observations

▷	seepage/inflow
▽	standing or observed water level
NFGWO	no free groundwater observed
OBS	observations obscured by drilling fluids

Drilling or Excavation Methods/Tools

The drilling/excavation methods used to perform the investigation may be shown either in a dedicated column down the left-hand edge of the log, or stated in the log footer. In some circumstances abbreviation codes may be used.

Method	Abbreviation Code
Direct Push	DP
Solid flight auger. Suffixes: /T = tungsten carbide tip, /V = v-shaped tip	AD[1]
Air Track	AT
Diatube	DT[1]
Hand auger	HA[1]
Hand tools (unspecified)	HAND
Existing exposure	X
Hollow flight auger	HSA[1]
HQ coring	HQ3
HMLC series coring	HMLC
NMLC series coring	NMLC
NQ coring	NQ3
PQ coring	PQ3
Predrilled	PD
Push tube	PT[1]
Ripping tyne/ripper	R
Rock roller	RR[1]
Rock breaker/hydraulic hammer	EH
Sonic drilling	SON[1]
Mud/blade bucket	MB[1]
Toothed bucket	TB[1]
Vibrocore	VC[1]
Vacuum excavation	VE
Wash bore (unspecified bit type)	WB[1]

[1] – numeric suffixes indicate tool diameter/width in mm

FOUNDATION MAINTENANCE AND FOOTING PERFORMANCE

Understanding and preventing soil-related building movement

This Building Technology Resource is designed to identify causes of soil-related building movement, and to suggest methods of prevention of resultant cracking.

Buildings can and often do move. This movement can be up, down, lateral or rotational. The fundamental cause of movement in buildings can usually be related to one or more problems in the foundation soil. It is important for the home owner to identify the soil type in order to ascertain the measures that should be put in place in order to ensure that problems in the foundation soil can be prevented, thus protecting against building movement.

SOIL TYPES

The types of soils usually present under the topsoil in land zoned for residential buildings can be split into two approximate groups – granular and clay. Quite often, foundation soil is a mixture of both types. The general problems associated with soils having granular content are usually caused by erosion. Clay soils are subject to saturation and swell/shrink problems.

Classifications for a given area can generally be obtained by application to the local authority, but these are sometimes unreliable and if there is doubt, a geotechnical report should be commissioned. As most buildings suffering movement problems are founded on clay soils, there is an emphasis on classification of soils according to the amount of swell and shrinkage they experience with variations of water content. Table 1 below is a reproduction of Table 2.1 from Australian Standard AS 2870-2011, Residential slabs and footings.

CAUSES OF MOVEMENT

SETTLEMENT DUE TO CONSTRUCTION

There are two types of settlement that occur as a result of construction:

- Immediate settlement occurs when a building is first placed on its foundation soil, as a result of compaction of the soil under the weight of the structure. The cohesive quality of clay soil mitigates against this, but granular (particularly sandy) soil is susceptible.
- Consolidation settlement is a feature of clay soil and may take place because of the expulsion of moisture from the soil or because of the soil's lack of resistance to local compressive or shear stresses. This will usually take place during the first few months after construction but has been known to take many years in exceptional cases.

These problems may be the province of the builder and should be taken into consideration as part of the preparation of the site for construction.

EROSION

All soils are prone to erosion, but sandy soil is particularly susceptible to being washed away. Even clay with a sand component of say 10% or more can suffer from erosion.

SATURATION

This is particularly a problem in clay soils. Saturation creates a bog-like suspension of the soil that causes it to lose virtually all of its bearing capacity. To a lesser degree, sand is affected by saturation because saturated sand may undergo a reduction in volume, particularly imported sand fill for bedding and blinding layers. However, this usually occurs as immediate settlement and should normally be the province of the builder.

SEASONAL SWELLING AND SHRINKAGE OF SOIL

All clays react to the presence of water by slowly absorbing it, making the soil increase in volume (see table below, from AS 2870). The degree of increase varies considerably between different clays, as does the degree of decrease during the subsequent drying out caused by fair weather periods. Because of the low absorption and expulsion rate, this phenomenon will not usually be noticeable unless there are prolonged rainy or dry periods, usually of weeks or months, depending on the land and soil characteristics.

The swelling of soil creates an upward force on the footings of the building, and shrinkage creates subsidence that takes away the support needed by the footing to retain equilibrium.

SHEAR FAILURE

This phenomenon occurs when the foundation soil does not have sufficient strength to support the weight of the footing. There are two major post-construction causes:

- Significant load increase.
- Reduction of lateral support of the soil under the footing due to erosion or excavation.

In clay soil, shear failure can be caused by saturation of the soil adjacent to or under the footing.

TREE ROOT GROWTH

Trees and shrubs that are allowed to grow in the vicinity of footings can cause foundation soil movement in two ways:

- Roots that grow under footings may increase in cross-sectional size, exerting upward pressure on footings.

TABLE 1. GENERAL DEFINITIONS OF SITE CLASSES.

Class	Foundation
A	Most sand and rock sites with little or no ground movement from moisture changes
S	Slightly reactive clay sites, which may experience only slight ground movement from moisture changes
M	Moderately reactive clay or silt sites, which may experience moderate ground movement from moisture changes
H1	Highly reactive clay sites, which may experience high ground movement from moisture changes
H2	Highly reactive clay sites, which may experience very high ground movement from moisture changes
F	Extremely reactive sites, which may experience extreme ground movement from moisture changes

Source: Reproduced with the permission of Standards Australia Limited © 2011. Copyright in AS 2870-2011 Residential slabs and footings vests in Standards Australia Limited.

© CSIRO 2021

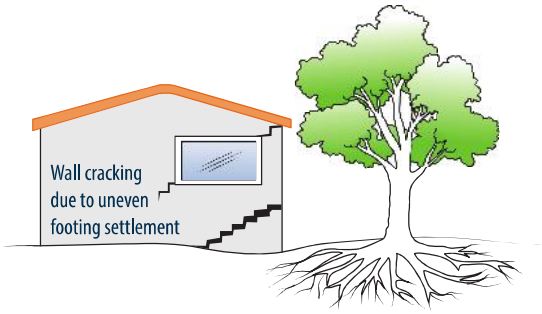

FIGURE 1 Trees can cause shrinkage and damage.

- Roots in the vicinity of footings will absorb much of the moisture in the foundation soil, causing shrinkage or subsidence.

UNEVENNESS OF MOVEMENT

The types of ground movement described above usually occur unevenly throughout the building's foundation soil. Settlement due to construction tends to be uneven because of:

- Differing compaction of foundation soil prior to construction.
- Differing moisture content of foundation soil prior to construction.

Movement due to non-construction causes is usually more uneven still. Erosion can undermine a footing that traverses the flow or can create the conditions for shear failure by eroding soil adjacent to a footing that runs in the same direction as the flow.

Saturation of clay foundation soil may occur where subfloor walls create a dam that makes water pond. It can also occur wherever there is a source of water near footings in clay soil. This leads to a severe reduction in the strength of the soil which may create local shear failure.

Seasonal swelling and shrinkage of clay soil affects the perimeter of the building first, then gradually spreads to the interior through absorption. The swelling process will usually begin at the uphill extreme of the building, or on the weather side where the land is flat. Shrinkage usually begins on the side of the building where the sun's heat is greatest.

EFFECTS OF UNEVEN SOIL MOVEMENT ON STRUCTURES

EROSION AND SATURATION

Erosion removes the support from under footings, tending to create subsidence of the part of the structure under which it occurs. Brickwork walls will resist the stress created by this removal of support by bridging the gap or cantilevering until the bricks or the mortar bedding fail. Older masonry has little resistance. Evidence of failure varies according to circumstances and symptoms may include:

- Step cracking in the mortar beds in the body of the wall or above/below openings such as doors or windows.
- Vertical cracking in the bricks (usually but not necessarily in line with the vertical beds or perpends).

Isolated piers affected by erosion or saturation of foundations will eventually lose contact with the bearers they support and may tilt or fall over. The floors that have lost this support will become bouncy, sometimes rattling ornaments etc.

SEASONAL SWELLING/SHRINKAGE IN CLAY

Swelling foundation soil due to rainy periods first lifts the most exposed extremities of the footing system, then the remainder of the perimeter footings while gradually permeating inside the building footprint to lift internal footings. This swelling first tends to create a dish effect, because the external footings are pushed higher than the internal ones.

The first noticeable symptom may be that the floor appears slightly dished. This is often accompanied by some doors binding on the floor or the door head, together with some cracking of cornice mitres. In buildings with timber flooring supported by bearers and joists, the floor can be bouncy. Externally there may be visible dishing of the hip or ridge lines.

As the moisture absorption process completes its journey to the innermost areas of the building, the internal footings will rise. If the spread of moisture is roughly even, it may be that the symptoms will temporarily disappear, but it is more likely that swelling will be uneven, creating a difference rather than a disappearance in symptoms. In buildings with timber flooring supported by bearers and joists, the isolated piers will rise more easily than the strip footings or piers under walls, creating noticeable doming of flooring.

As the weather pattern changes and the soil begins to dry out, the external footings will be first affected, beginning with the locations where the sun's effect is strongest. This has the effect of lowering the external footings. The doming is accentuated, and cracking reduces or disappears where it occurred because of dishing, but other cracks open up. The roof lines may become convex.

Doming and dishing are also affected by weather in other ways. In areas where warm, wet summers and cooler dry winters prevail, water migration tends to be toward the interior and doming will be accentuated, whereas where summers are dry, and winters are cold and wet, migration tends to be toward the exterior and the underlying propensity is toward dishing.

MOVEMENT CAUSED BY TREE ROOTS

In general, growing roots will exert an upward pressure on footings, whereas soil subject to drying because of tree or shrub roots will tend to remove support from under footings by inducing shrinkage.

COMPLICATIONS CAUSED BY THE STRUCTURE ITSELF

Most forces that the soil causes to be exerted on structures are vertical – i.e. either up or down. However, because these forces are seldom spread evenly around the footings, and because the building resists uneven movement because of its rigidity, forces are exerted from one part of the building to another. The net result of all these forces is usually rotational. This resultant force often complicates the diagnosis because the visible symptoms do not simply reflect the original cause. A common symptom is binding of doors on the vertical member of the frame.

EFFECTS ON FULL MASONRY STRUCTURES

Brickwork will resist cracking where it can. It will attempt to span areas that lose support because of subsided foundations or raised points. It is therefore usual to see cracking at weak points, such as openings for windows or doors.

In the event of construction settlement, cracking will usually remain unchanged after the process of settlement has ceased.

With local shear or erosion, cracking will usually continue to develop until the original cause has been remedied, or until the subsidence has completely neutralised the affected portion of footing and the structure has stabilised on other footings that remain effective.

In the case of swell/shrink effects, the brickwork will in some cases return to its original position after completion of a cycle, however it is more likely that the rotational effect will not be exactly reversed, and it is also usual that brickwork will settle in its new position and will resist the forces trying to return it to its original position. This means that in a case where swelling takes place after construction and cracking occurs, the cracking is likely to at least partly remain after the shrink segment of the cycle is complete. Thus, each time the cycle is repeated, the likelihood is that the cracking will become wider until the sections of brickwork become virtually independent.

With repeated cycles, once the cracking is established, if there is no other complication, it is normal for the incidence of cracking to stabilise, as the building has the articulation it needs to cope with the problem. This is by no means always the case, however, and monitoring of cracks in walls and floors should always be treated seriously.

Upheaval caused by growth of tree roots under footings is not a simple vertical shear stress. There is a tendency for the root to also

© CSIRO 2021

exert lateral forces that attempt to separate sections of brickwork after initial cracking has occurred.

The normal structural arrangement is that the inner leaf of brickwork in the external walls and at least some of the internal walls (depending on the roof type) comprise the load-bearing structure on which any upper floors, ceilings and the roof are supported. In these cases, it is internally visible cracking that should be the main focus of attention, however there are a few examples of dwellings whose external leaf of masonry plays some supporting role, so this should be checked if there is any doubt. In any case, externally visible cracking is important as a guide to stresses on the structure generally, and it should also be remembered that the external walls must be capable of supporting themselves.

EFFECTS ON FRAMED STRUCTURES

Timber or steel framed buildings are less likely to exhibit cracking due to swell/shrink than masonry buildings because of their flexibility. Also, the doming/dishing effects tend to be lower because of the lighter weight of walls. The main risks to framed buildings are encountered because of the isolated pier footings used under walls. Where erosion or saturation causes a footing to fall away, this can double the span which a wall must bridge. This additional stress can create cracking in wall linings, particularly where there is a weak point in the structure caused by a door or window opening. It is, however, unlikely that framed structures will be so stressed as to suffer serious damage without first exhibiting some or all of the above symptoms for a considerable period. The same warning period should apply in the case of upheaval. It should be noted, however, that where framed buildings are supported by strip footings there is only one leaf of brickwork and therefore the externally visible walls are the supporting structure for the building. In this case, the subfloor masonry walls can be expected to behave as full brickwork walls.

EFFECTS ON BRICK VENEER STRUCTURES

Because the load-bearing structure of a brick veneer building is the frame that makes up the interior leaf of the external walls plus perhaps the internal walls, depending on the type of roof, the building can be expected to behave as a framed structure, except that the external masonry will behave in a similar way to the external leaf of a full masonry structure.

WATER SERVICE AND DRAINAGE

Where a water service pipe, a sewer or stormwater drainage pipe is in the vicinity of a building, a water leak can cause erosion, swelling or saturation of susceptible soil. Even a minuscule leak can be enough to saturate a clay foundation. A leaking tap near a building can have the same effect. In addition, trenches containing pipes can become watercourses even though backfilled, particularly where broken rubble is used as fill. Water that runs along these trenches can be responsible for serious erosion, interstrata seepage into subfloor areas and saturation.

Pipe leakage and trench water flows also encourage tree and shrub roots to the source of water, complicating and exacerbating the problem. Poor roof plumbing can result in large volumes of rainwater being concentrated in a small area of soil:

- Incorrect falls in roof guttering may result in overflows, as may gutters blocked with leaves etc.
- Corroded guttering or downpipes can spill water to ground.
- Downpipes not positively connected to a proper stormwater collection system will direct a concentration of water to soil that is directly adjacent to footings, sometimes causing large-scale problems such as erosion, saturation and migration of water under the building.

SERIOUSNESS OF CRACKING

In general, most cracking found in masonry walls is a cosmetic nuisance only and can be kept in repair or even ignored. Table 2 below is a reproduction of Table C1 of AS 2870-2011.

AS 2870-2011 also publishes figures relating to cracking in concrete floors, however because wall cracking will usually reach the critical point significantly earlier than cracking in slabs, this table is not reproduced here.

PREVENTION AND CURE

PLUMBING

Where building movement is caused by water service, roof plumbing, sewer or stormwater failure, the remedy is to repair the problem. It is prudent, however, to consider also rerouting pipes away from the building where possible and relocating taps to positions where any leakage will not direct water to the building vicinity. Even where gully traps are present, there is sometimes sufficient spill to create erosion or saturation, particularly in modern installations using smaller diameter PVC fixtures. Indeed, some gully traps are not situated directly under the taps that are installed to charge them, with the result that water from the tap may enter the backfilled trench that houses the sewer piping. If the trench has been poorly backfilled, the water will either pond or flow along the bottom of the trench. As these trenches usually run alongside the footings and can be at a similar depth, it is not hard to see how any water that is thus directed into a trench can easily affect the foundation's ability to support footings or even gain entry to the subfloor area.

GROUND DRAINAGE

In all soils there is the capacity for water to travel on the surface and below it. Surface water flows can be established by inspection during and after heavy or prolonged rain. If necessary, a grated drain system connected to the stormwater collection system is usually an easy solution.

It is, however, sometimes necessary when attempting to prevent water migration that testing be carried out to establish watertable height and subsoil water flows. This subject may be regarded as an area for an expert consultant.

PROTECTION OF THE BUILDING PERIMETER

It is essential to remember that the soil that affects footings extends well beyond the actual building line. Watering of garden plants, shrubs and trees causes some of the most serious water problems.

For this reason, particularly where problems exist or are likely to occur, it is recommended that an apron of paving be installed around as much of the building perimeter as necessary. This paving should extend outwards a minimum of 900 mm (more in highly reactive soil) and should have a minimum fall away from the building of 1:60. The finished paving should be no less than 100 mm below brick vent bases.

It is prudent to relocate drainage pipes away from this paving, if possible, to avoid complications from future leakage. If this is not practical, earthenware pipes should be replaced by PVC and backfilling should be of the same soil type as the surrounding soil and compacted to the same density.

Except in areas where freezing of water is an issue, it is wise to remove taps in the building area and relocate them well away from the building – preferably not uphill.

It may be desirable to install a grated drain at the outside edge of the paving on the uphill side of the building. If subsoil drainage is needed this can be installed under the surface drain.

CONDENSATION

In buildings with a subfloor void, such as where bearers and joists support flooring, insufficient ventilation creates ideal conditions for condensation, particularly where there is little clearance between the floor and the ground. Condensation adds to the moisture already present in the subfloor and significantly slows the process of drying out. Installation of an adequate subfloor ventilation system, either natural or mechanical, is desirable.

© CSIRO 2021

TABLE 2. CLASSIFICATION OF DAMAGE WITH REFERENCE TO WALLS.

Description of typical damage and required repair	Approximate crack width limit	Damage category
Hairline cracks	<0.1 mm	0 – Negligible
Fine cracks which do not need repair	<1 mm	1 – Very Slight
Cracks noticeable but easily filled. Doors and windows stick slightly.	<5 mm	2 – Slight
Cracks can be repaired and possibly a small amount of wall will need to be replaced. Doors and windows stick. Service pipes can fracture. Weathertightness often impaired.	5–15 mm (or a number of cracks 3 mm or more in one group)	3 – Moderate
Extensive repair work involving breaking-out and replacing sections of walls, especially over doors and windows. Window and door frames distort. Walls lean or bulge noticeably, some loss of bearing in beams. Service pipes disrupted.	15–25 mm but also depends on number of cracks	4 – Severe

Source: Reproduced with the permission of Standards Australia Limited © 2011. Copyright in AS 2870-2011 Residential slabs and footings vests in Standards Australia Limited.

Warning: Although this Building Technology Resource deals with cracking in buildings, it should be said that subfloor moisture can result in the development of other problems, notably:

- Water that is transmitted into masonry, metal or timber building elements causes damage and/or decay to those elements.
- High subfloor humidity and moisture content create an ideal environment for various pests, including termites and spiders, and mould.
- Where high moisture levels are transmitted to the flooring and walls, an increase in the dust mite count can ensue within the living areas. Dust mites, as well as dampness in general, can be a health hazard to inhabitants, particularly those who are abnormally susceptible to respiratory ailments.

THE GARDEN

The ideal vegetation layout is to have lawn or plants that require only light watering immediately adjacent to the drainage or paving edge, then more demanding plants, shrubs and trees spread out in that order.

Overwatering due to misuse of automatic watering systems is a common cause of saturation and water migration under footings. If it is necessary to use these systems, it is important to remove garden beds to a completely safe distance from buildings.

EXISTING TREES

Where a tree is causing a problem of soil drying or there is the existence or threat of upheaval of footings, if the offending roots are subsidiary and their removal will not significantly damage the tree, they should be severed and a concrete or metal barrier placed vertically in the soil to prevent future root growth in the direction of the building. If it is not possible to remove the relevant roots without damage to the tree, an application to remove the tree should be made to the local authority. A prudent plan is to transplant likely offenders before they become a problem.

INFORMATION ON TREES, PLANTS AND SHRUBS

State departments overseeing agriculture can give information regarding root patterns, volume of water needed and safe distance from buildings of most species. Botanic gardens are also sources of information.

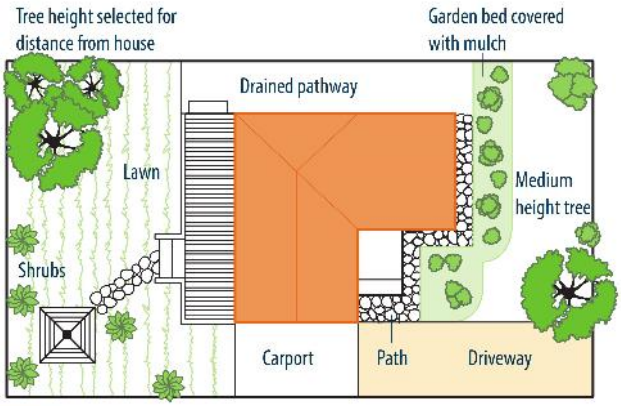

FIGURE 2 Gardens for a reactive site.

EXCAVATION

Excavation around footings must be properly engineered. Soil supporting footings can only be safely excavated at an angle that allows the soil under the footing to remain stable. This angle is called the angle of repose (or friction) and varies significantly between soil types and conditions. Removal of soil within the angle of repose will cause subsidence.

REMEDIATION

Where erosion has occurred that has washed away soil adjacent to footings, soil of the same classification should be introduced and compacted to the same density. Where footings have been undermined, augmentation or other specialist work may be required. Remediation of footings and foundations is generally the realm of a specialist consultant.

Where isolated footings rise and fall because of swell/shrink effect, the home owner may be tempted to alleviate floor bounce by filling the gap that has appeared between the bearer and the pier with blocking. The danger here is that when the next swell segment of the cycle occurs, the extra blocking will push the floor up into an accentuated dome and may also cause local shear failure in the soil. If it is necessary to use blocking, it should be by a pair of fine wedges and monitoring should be carried out fortnightly.

CSIROPUBLISHING

1300 788 000 | +61 3 9545 8400 | publishing.sales@csiro.au | www.publish.csiro.au
For information about CSIRO testing services visit www.csiro.au/en/work-with-us/services
ISBN 9781486312962 (print)/9781486312979 (digital) © CSIRO 2021
(replaces Building Technology File 18, 18-2011 and Information Sheet 10/91)
Unauthorised copying of this material is prohibited.

IMPORTANT DISCLAIMER: This information is prepared for Australia and general in nature. It may be incomplete or inapplicable in some cases.
Laws and regulations may vary in different places. Seek specialist advice for your particular circumstances.
To the extent permitted by law, CSIRO excludes all liability to any person for any loss, damage, cost or other consequence that may result from using this information.

© CSIRO 2021

TERMS AND CONDITIONS: BUILDING TECHNOLOGY RESOURCES

CONDITIONS OF USE

This publication may only be used in accordance with the following terms:

1. CSIRO (which for the purposes of these terms includes CSIRO Publishing) and its licensees own the copyright in the publication and will retain all rights, title and interest in and to the publication.
2. Once downloaded, the downloaded PDF publication may be provided by the user that initially downloads the PDF publication to other users by electronic mail once for each user licence purchased subject and pursuant to paragraph 4 below. The publication may not otherwise be copied or circulated electronically, including, for the avoidance of doubt, by electronic mail, even for internal use.
3. The downloaded publication may be printed, but the number of copies that may be printed is limited to the number of user licences purchased. That is, each user may print one (1) copy of the publication only.
4. The number of user licences purchased is shown on the tax invoice provided at the time of purchase. For the avoidance of doubt, the user that initially downloads the PDF publication shall be taken to be one (1) user. For example, if two (2) user licences are purchased, the publication may only be shared once to one (1) other user and printed once by each user (i.e. a maximum of two (2) hardcopy versions of the publication may be printed).
5. The publication (whether in PDF or printed format) may only be used for personal, internal, non-commercial purposes.
6. The publication and all its content is subject to copyright and unauthorised copying is prohibited.
7. Reproduction, renting, leasing, re-selling, sub-licensing, assignment or any supply of the publication, in print or electronically, is not permitted.
8. Retransmission, caching, networking or posting of the downloaded PDF publication is strictly prohibited.
9. Content may not be extracted for any reason and derivative works based on the publication are not permitted. The publication and any of its content may not be copied, reformatted, adapted, modified, translated, merged, reverse engineered, decompiled, dissembled or changed in any way and otherwise must not be used in a manner that would infringe the copyrights therein.
10. Ownership, copyright, trade mark, confidentiality or other marks or legends (including any digital watermark or similar) on or in the publication must not be removed, altered or obscured.
11. The security of the publication mut be protected at all times.
12. CSIRO will not provide any updating service for the publication. That is, purchasing the publication only entitles access to the publication as current at the date of purchase and does not entitle access to any amended, changed or updated version of the publication. CSIRO is not obliged to notify purchasers or users if the publication is amended, changed, updated or withdrawn after purchase.
13. If you purchased this publication via the CSIRO Publishing website, the PDF publication will remain available on the CSIRO Publishing website for 48 hours after purchasing. In the event of a communication problem during downloading, re-download the publication within 48 hours of purchase. After that time, the publication will no longer be accessible via the CSIRO Publishing website.
14. The right to use this publication pursuant to these terms will continue indefinitely, but will terminate automatically and without notice for any failure to comply with these terms. Upon termination all copies of the publication must be deleted and/or destroyed.
15. CSIRO nor any other person, to the extent permitted by law, has made or makes any representation or warranty of any kind in relation to the publication.
16. Without limiting the foregoing in any way, the information contained in the publication is general in nature. It may be incomplete or inapplicable in some cases. Laws and regulations may vary in different places. Seek specialist advice for your particular circumstances.
17. To the extent permitted by law, CSIRO excludes all liability to any person for any loss, damage, cost or other consequence that may result from using this publication and the information in it.
18. For reproduction of the publication or any portions or other use outside the circumstances set out in these terms, prior written permission of CSIRO must be sought. Please contact: publishing@csiro.au

TEST PIT LOG

CLIENT: Capital Estate Developments Pty Ltd
PROJECT: Proposed Residential Subdivision
LOCATION: Stage 7 Denman North Estate, Denman Prospect

SURFACE LEVEL: 585 AHD
COORDINATE: E:200921, N:602812
DATUM/GRID: ACT Stromlo
DIP/AZIMUTH: 90°/---°

LOCATION ID: 79
PROJECT No: 88231.60
DATE: 06/08/24
SHEET: 1 of 1

CONDITIONS ENCOUNTERED								SAMPLE				TESTING AND REMARKS	
GROUNDWATER	RL (m)	DEPTH (m)	DESCRIPTION OF STRATA	GRAPHIC	ORIGIN[#]	CONSIS.[*] DENSITY.[*]	MOISTURE	REMARKS	TYPE	INTERVAL	DEPTH (m)	TEST TYPE	RESULTS AND REMARKS
06/08/24 No free groundwater observed	584		FILL / Sandy Gravelly CLAY (CL), trace silt: brown; low plasticity; fine to coarse sand; fine to coarse gravel.		FILL	(VSt) to (H)	w<PL		D		0.50		
		0.60	FILL / Clayey Silty SAND (SC), with gravel: yellow brown; fine to coarse; fine to coarse gravel.		FILL	(D)	D		D		1.00		
	583												
			Test Pit discontinued at 1.60m depth. Limit of investigation.										

NOTES: [#] Soil origin is "probable" unless otherwise stated. [*] Consistency/Relative density shading is for visual reference only - no correlation between cohesive and granular materials is implied.

PLANT: CAT 306 CR mini excavator
OPERATOR: Bingley Electrical Pty Ltd
LOGGED: Miller
METHOD: 300mm wide bucket
REMARKS: Surface levels and coordinates are approximate only and must not be relied upon.

Refer to explanatory notes for symbol and abbreviation definitions

Douglas PARTNERS

Generated with CORE-GS by Geroc - Soil Log

TEST PIT LOG

CLIENT: Capital Estate Developments Pty Ltd
PROJECT: Proposed Residential Subdivision
LOCATION: Stage 7 Denman North Estate, Denman Prospect

SURFACE LEVEL: 584 AHD
COORDINATE: E:200940, N:602825
DATUM/GRID: ACT Stromlo
DIP/AZIMUTH: 90°/---°

LOCATION ID: 80
PROJECT No: 88231.60
DATE: 06/08/24
SHEET: 1 of 1

CONDITIONS ENCOUNTERED								SAMPLE				TESTING AND REMARKS	
GROUNDWATER	RL (m)	DEPTH (m)	DESCRIPTION OF STRATA	GRAPHIC	ORIGIN(#)	CONSIS.(*) / DENSITY.(*)	MOISTURE	REMARKS	TYPE	INTERVAL	DEPTH (m)	TEST TYPE	RESULTS AND REMARKS
06/08/24 No free groundwater observed			FILL / Silty Sandy CLAY (CL): brown; low plasticity; fine to coarse sand.		FILL	NA	w<PL						
		0.20	FILL / Sandy Gravelly CLAY (CL), trace silt: brown; low plasticity; fine to coarse sand; fine to coarse gravel.										
	583								D		0.50		
			0.80m-0.90m: pocket of high plasticity clay		FILL	(VSt) to (H)	w<PL						
									D		0.85		
		1							D		1.00		
	582		Test Pit discontinued at 1.30m depth. Slow progress in hard gravelly fill.										

NOTES: (#) Soil origin is "probable" unless otherwise stated. (*) Consistency/Relative density shading is for visual reference only - no correlation between cohesive and granular materials is implied.

PLANT: CAT 306 CR mini excavator
OPERATOR: Bingley Electrical Pty Ltd
LOGGED: Miller
METHOD: 300mm wide bucket
REMARKS: Surface levels and coordinates are approximate only and must not be relied upon.

Refer to explanatory notes for symbol and abbreviation definitions

Douglas PARTNERS

Generated with CORE-GS by Geroc - Soil Log

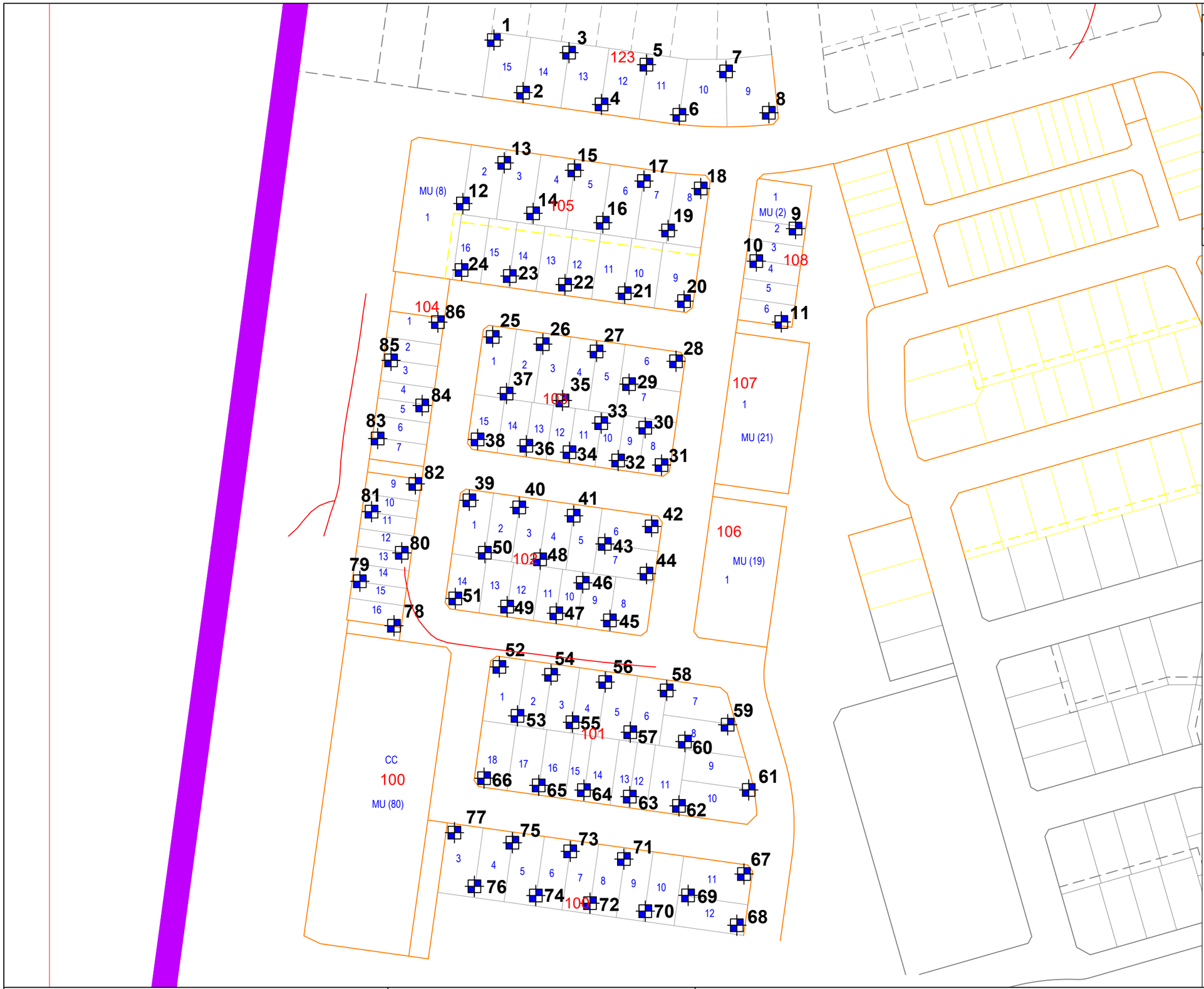

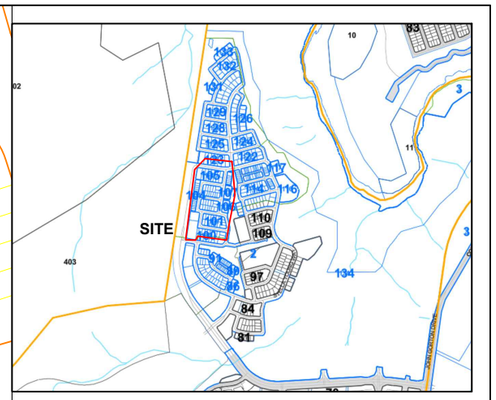

Locality Plan

LEGEND

Test Pit Location

Approximate Rubble Drain Alignment

0 17.5 35 52.5 70 87.5

1:1750 @ A3

NOTE: Base drawing from Huon (Drawing Depth Range Plot, dated 8 June 2023). Rubble Drain alignments from Capital Estate Developments Pty Ltd

Douglas PARTNERS

GROUNDED EXPERTISE

CLIENT: Capital Estate Developments Pty Ltd	TITLE: **Test Location Plan**	PROJECT No: 88231.60	
OFFICE: Canberra / DRAWN BY: FM	**Proposed Residential Subdivision**	DRAWING No: 1	
SCALE: As Shown / DATE: 29.09.25	**Stage 7 Denman Prospect, ACT**	REVISION: 1	

SITE CLASSIFICATION REPORT SUMMARY

BLOCK:	**14**	**SECTION:**	**104**	**SUBURB:**	**Denman Prospect**
JOB No:	**88231.60**			**DATE:**	**September 2025**
CLIENT:	**Capital Estate Developments Pty Ltd**			**REF:**	**R.070.Rev1**

Classification Procedures:

Existing Subsurface Conditions: Refer attached test pit log(s) – Pit(s) 79,80 and Drawing 1 Rev1.

Bulk Earthworks: Based on Douglas Partners records, controlled fill was placed within the block under Level 1 control as defined in AS 3798:2007 during subdivision construction.

Laboratory Results: Previous laboratory testing results indicated liquid limit ranging from 25-80%, plasticity index ranging from 12-57% and linear shrinkage ranging from 6-20%.

Site Classification: Site classification in accordance with AS2870:2011 provides guidance on the patterns and magnitude of moisture related seasonal ground movements that must be considered in design. Based on the current soil profile / state, on limited subsurface information, soil reactivity and allowing for variation in the subsoil profile, the soil profile would be equivalent to Class M* (moderately reactive/filled) conditions. The site classification must be reassessed should the subsurface profile change by either cutting or filling and/or if the presence of service trenches, retaining walls or submerged structures are within the zone of influence of the proposed footings. Reference must be made to the comments provided below.

Footing Systems: Reference must be made to AS2870:2011 which indicates footing systems that are appropriate for each site classification. All footings must found within a uniform bearing stratum of suitable strength/material, below the zone of influence of any service trenches, backfill zones, retaining walls or underground structures. Masonry walls should be articulated in accordance with current best practice. Dwelling design must ensure suitable drainage and uniform moisture conditions are maintained in the vicinity of footings. Footing systems must be confirmed by a structural engineer taking into consideration any onsite or offsite constraints.

Maintenance Guidelines: Reference should be made to the attached CSIRO Sheet BTF 18 'Foundation Maintenance & Footing Performance' to comments about gardens, landscaping and trees on the performance of foundation soils and in particular in respect to maintaining good surface drainage. It notes that minor cracking in most structures is inevitable, and it describes site maintenance practices aimed at minimising foundation movements that can lead to cracking damage.

Comments/Limitations:

The successful purchaser must make their own interpretations, deductions and conclusions from the information made available and will need to accept full responsibility for such interpretations, deductions and conclusions. To that end development specific geotechnical investigations must be undertaken and it is recommended that footing excavations be inspected by a geotechnical engineer.

Some variability in subsurface conditions must be anticipated with the possibility additional topsoils / fill may have been spread subsequent to the investigation.

Site preparation prior to the construction should include removal of all vegetation, topsoil and any uncontrolled fill and all new fill must be placed under controlled conditions (AS 3798:2007), otherwise Class P conditions would be warranted in those fill areas. Some remnant tree roots may still be present within the natural profile, generally embedded within the weathered rock, at the existing ground surface or below any controlled fill.

Depending on the depth of site cut and trenches, rock excavation may be required.

Moisture condition of site soils and/or the presence of groundwater may vary considerably from time of investigation compared to at the time of construction. Groundwater seepages are highly likely after heavy or prolonged rain.

Drainage works to control groundwater seepages have been installed during the subdivision construction. The successful purchaser should seek advice from the developer before any construction works.

This report must be read in conjunction with the attached "Limitations" and notes "About this Report".

References:

AS 2870:2011, Residential Slabs and Footings, Standards Australia.

AS 3798:2007, Guidelines on Earthworks for Commercial and Residential Developments, Standards Australia.

Attachments:

Limitations & About this Report	Test Pit Log(s) Pit(s) 79,80
Explanatory Notes	Drawing 1 Rev1

A Hirsch

Written by: Alastair Hirsch

Reviewed by: Michael Jones

Douglas PARTNERS | GROUNDED EXPERTISE

Limitations:

Douglas Partners Pty Ltd (Douglas) has prepared this report for this project at Stage 7 Denman North Estate, Denman Prospect ACT in line with Douglas' proposal 88231.42.P.001.Rev1 dated 10 November 2022 and acceptance received from Capital Estate Developments Pty Ltd dated 10 November 2022. The work was carried out under Douglas' Engagement Terms. This report is provided for the exclusive use of Capital Estate Developments Pty Ltd for this project only and for the purposes as described in the report. It should not be used by or relied upon for other projects or purposes on the same or other site or by a third party. Any party so relying upon this report beyond its exclusive use and purpose as stated above, and without the express written consent of Douglas, does so entirely at its own risk and without recourse to Douglas for any loss or damage. In preparing this report Douglas has necessarily relied upon information provided by the client and/or their agents.

The results provided in the report are indicative of the sub-surface conditions on the site only at the specific sampling and/or testing locations, and then only to the depths investigated and at the time the work was carried out. Sub-surface conditions can change abruptly due to variable geological processes and also as a result of human influences. Such changes may occur after Douglas' field testing has been completed.

Douglas' advice is based upon the conditions encountered during this investigation. The accuracy of the advice provided by Douglas in this report may be affected by undetected variations in ground conditions across the site between and beyond the sampling and/or testing locations. The advice may also be limited by budget constraints imposed by others or by site accessibility.

The assessment of atypical safety hazards arising from this advice is restricted to the geotechnical components set out in this report and based on known project conditions and stated design advice and assumptions. While some recommendations for safe controls may be provided, detailed 'safety in design' assessment is outside the current scope of this report and requires additional project data and assessment.

The scope of work for this investigation/report did not include the assessment of surface or sub-surface materials or groundwater for contaminants, within or adjacent to the site. Should evidence of fill of unknown origin be noted in the report, and in particular the presence of building demolition materials, it should be recognised that there may be some risk that such fill may contain contaminants and hazardous building materials.

This report must be read in conjunction with all of the attached and should be kept in its entirety without separation of individual pages or sections. Douglas cannot be held responsible for interpretations or conclusions made by others unless they are supported by an expressed statement, interpretation, outcome or conclusion stated in this report.

This report, or sections from this report, should not be used as part of a specification for a project, without review and agreement by Douglas. This is because this report has been written as advice and opinion rather than instructions for construction.

About this Report

November 2023

Introduction

These notes have been provided to amplify DP's report in regard to classification methods, field procedures and the comments section. Not all are necessarily relevant to all reports.

DP's reports are based on information gained from limited subsurface excavations and sampling, supplemented by knowledge of local geology and experience. For this reason, they must be regarded as interpretive rather than factual documents, limited to some extent by the scope of information on which they rely.

Copyright

This report is the property of Douglas Partners Pty Ltd. The report may only be used for the purpose for which it was commissioned and in accordance with the Conditions of Engagement for the commission supplied at the time of proposal. Unauthorised use of this report in any form whatsoever is prohibited.

Borehole and Test Pit Logs

The borehole and test pit logs presented in this report are an engineering and/or geological interpretation of the subsurface conditions, and their reliability will depend to some extent on frequency of sampling and the method of drilling or excavation. Ideally, continuous undisturbed sampling or core drilling will provide the most reliable assessment, but this is not always practicable or possible to justify on economic grounds. In any case the boreholes and test pits represent only a very small sample of the total subsurface profile.

Interpretation of the information and its application to design and construction should therefore take into account the spacing of boreholes or pits, the frequency of sampling, and the possibility of other than 'straight line' variations between the test locations.

Groundwater

Where groundwater levels are measured in boreholes there are several potential problems, namely:

- In low permeability soils groundwater may enter the hole very slowly or perhaps not at all during the time the hole is left open;
- A localised, perched water table may lead to an erroneous indication of the true water table;
- Water table levels will vary from time to time with seasons or recent weather changes. They may not be the same at the time of construction as are indicated in the report; and
- The use of water or mud as a drilling fluid will mask any groundwater inflow. Water has to be blown out of the hole and drilling mud must first be washed out of the hole if water measurements are to be made.

More reliable measurements can be made by installing standpipes which are read at intervals over several days, or perhaps weeks for low permeability soils. Piezometers, sealed in a particular stratum, may be advisable in low permeability soils or where there may be interference from a perched water table.

Reports

The report has been prepared by qualified personnel, is based on the information obtained from field and laboratory testing, and has been undertaken to current engineering standards of interpretation and analysis. Where the report has been prepared for a specific design proposal, the information and interpretation may not be relevant if the design proposal is changed. If this happens, DP will be pleased to review the report and the sufficiency of the investigation work.

Every care is taken with the report as it relates to interpretation of subsurface conditions, discussion of geotechnical and environmental aspects, and recommendations or suggestions for design and construction. However, DP cannot always anticipate or assume responsibility for:

- Unexpected variations in ground conditions. The potential for this will depend partly on borehole or pit spacing and sampling frequency;
- Changes in policy or interpretations of policy by statutory authorities; or
- The actions of contractors responding to commercial pressures.

If these occur, DP will be pleased to assist with investigations or advice to resolve the matter.

continued next page

About this Report

Site Anomalies

In the event that conditions encountered on site during construction appear to vary from those which were expected from the information contained in the report, DP requests that it be immediately notified. Most problems are much more readily resolved when conditions are exposed rather than at some later stage, well after the event.

Information for Contractual Purposes

Where information obtained from this report is provided for tendering purposes, it is recommended that all information, including the written report and discussion, be made available. In circumstances where the discussion or comments section is not relevant to the contractual situation, it may be appropriate to prepare a specially edited document. DP would be pleased to assist in this regard and/or to make additional report copies available for contract purposes at a nominal charge.

Site Inspection

The company will always be pleased to provide engineering inspection services for geotechnical and environmental aspects of work to which this report is related. This could range from a site visit to confirm that conditions exposed are as expected, to full time engineering presence on site.

intentionally blank

intentionally blank

Terminology, Symbols and Abbreviations

November 2023

Introduction to Terminology, Symbols and Abbreviations

Douglas Partners' reports, investigation logs, and other correspondence may use terminology which has quantitative or qualitative connotations. To remove ambiguity or uncertainty surrounding the use of such terms, the following sets of notes pages may be attached Douglas Partners' reports, depending on the work performed and conditions encountered:

- Soil Descriptions;
- Rock Descriptions; and
- Sampling, insitu testing, and drilling methodologies

In addition to these pages, the following notes generally apply to most documents.

Abbreviation Codes

Site conditions may also be presented in a number of different formats, such as investigation logs, field mapping, or as a written summary. In some of these formats textual or symbolic terminology may be presented using textual abbreviation codes or graphic symbols, and, where commonly used, these are listed alongside the terminology definition. For ease of identification in these note pages, textual codes are presented in these notes in the following style XW. Code usage conforms with the following guidelines:

- Textual codes are case insensitive, although herein they are generally presented in upper case; and
- Textual codes are contextual (i.e. the same or similar combinations of characters may be used in different contexts with different meanings (for example `PL` is used for plastic limit in the context of soil moisture condition, as well as in `PL(A)` for point load test result in the testing results column)).

Data Integrity Codes

Subsurface investigation data recorded by Douglas Partners is generally managed in a highly structured database environment, where records "span" between a top and bottom depth interval. Depth interval "gaps" between records are considered to introduce ambiguity, and, where appropriate, our practice guidelines may require contiguous data sets. Recording meaningful data is not always appropriate (for example assigning a "strength" to a concrete pavement) and the following codes may be used to maintain contiguity in such circumstances.

Term	Description	Abbreviation Code
Core loss	No core recovery	KL
Unknown	Information was not available to allow classification of the property. For example, when auguring in loose, saturated sand auger cuttings may not be returned.	UK
No data	Information required to allow classification of the property was not available. For example if drilling is commenced from the base of a hole predrilled by others	ND
Not Applicable	Derivation of the properties not appropriate or beyond the scope of the investigation. For example providing a description of the strength of a concrete pavement	NA

Graphic Symbols

Douglas Partners' logs contain a "graphic" column which provides a pictorial representation of the basic composition of the material. The symbols used are directly representing the material name stated in the adjacent "Description of Strata" column, and as such no specific graphic symbology legend has been provided in these notes.

intentionally blank

Soil Descriptions

Introduction

All materials which are not considered to be "in-situ rock" are described in general accordance with the soil description model of AS 1726-2017 Part 6.1.3, and can be broken down into the following description structure:

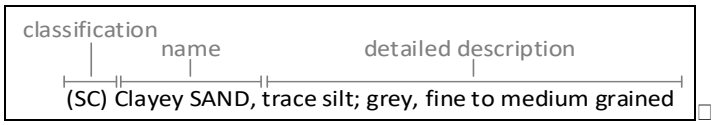

The "classification" comprises a two character "group symbol" providing a general summary of dominant soil characteristics. The "name" summarises the particle sizes within the soil which most influence its behaviour. The detailed description presents more information about composition, condition, structure, and origin of the soil.

Classification, naming and description of soils require the relative proportion of particles of different sizes within the whole soil mixture to be considered.

Particle size designation and Behaviour Model

Solid particles within a soil are differentiated on the basis of size.

The engineering behaviour properties of a soil can subsequently be modelled to be either "fine grained" (also known as "cohesive" behaviour) or "coarse grained" ("non cohesive" behaviour), depending on the relative proportion of fine or coarse fractions in the soil mixture.

Particle Size Designation	Particle Size (mm)	Behaviour Model	
		Behaviour	Approximate Dry Mass
Boulder	>200	Excluded from particle behaviour model as "oversize"	
Cobble	63 - 200		
Gravel[1]	2.36 - 63	Coarse	>65%
Sand[1]	0.075 - 2.36		
Silt	0.002 - 0.075	Fine	>35%
Clay	<0.002		

[1] – refer grain size subdivision descriptions below

The behaviour model boundaries defined above are not precise, and the material behaviour should be assumed from the name given to the material (which considers the particle fraction which dominates the behaviour, refer "component proportions" below), rather than strict observance of the proportions of particle sizes. For example, if a material is named a "Sandy CLAY", this is indicative that the material exhibits fine grained behaviour, even if the dry mass of coarse grained material may exceed 65%.

Component proportions

The relative proportion of the dry mass of each particle size fraction is assessed to be a "primary", "secondary", or "minor" component of the soil mixture, depending on its influence over the soil behaviour.

Component Proportion Designation	Definition[1]	Relative Proportion	
		In Fine Grained Soil	In Coarse Grained Soil
Primary	The component (particle size designation, refer above) which dominates the engineering behaviour of the soil	The clay/silt component with the greater proportion	The sand/gravel component with the greater proportion
Secondary	Any component which is not the primary, but is significant to the engineering properties of the soil	Any component with greater than 30% proportion	Any granular component with greater than 30%; or Any fine component with greater than 12%
Minor[2]	Present in the soil, but not significant to its engineering properties	All other components	All other components

[1] As defined in AS1726-2017 6.1.4.4

[2] In the detailed material description, minor components are split into two further sub-categories. Refer "identification of minor components" below.

Composite Materials

In certain situations, a lithology description may describe more than one material, for example, collectively describing a layer of interbedded sand and clay. In such a scenario, the two materials would be described independently, with the names preceded or followed by a statement describing the arrangement by which the materials co-exist. For example, "INTERBEDDED Silty CLAY AND SAND".

Soil Descriptions

Classification

The soil classification comprises a two character group symbol. The first character identifies the primary component. The second character identifies either the grading or presence of fines in a coarse grained soil, or the plasticity in a fine grained soil. Refer AS1726-2017 6.1.6 for further clarification.

Soil Name

For most soils, the name is derived with the primary component included as the noun (in upper case), preceded by any secondary components stated in an adjective form. In this way, the soil name also describes the general composition and indicates the dominant behaviour of the material.

Component [1]	Prominence in Soil Name
Primary	Noun (eg "CLAY")
Secondary	Adjective modifier (eg "Sandy")
Minor	No influence

[1] – for determination of component proportions, refer component proportions on previous page

For materials which cannot be disaggregated, or which are not comprised of rock or mineral fragments, the names "ORGANIC MATTER" or "ARTIFICIAL MATERIAL" may be used, in accordance with AS1726-2017 Table 14.

Commercial or colloquial names are not used for the soil name where a component derived name is possible (for example "Gravelly SAND" rather than "CRACKER DUST").

Materials of "fill" or "topsoil" origin are generally assigned a name derived from the primary/secondary component (where appropriate). In log descriptions this is preceded by uppercase "FILL" or "TOPSOIL". Origin uncertainty is indicated in the description by the characters (?), with the degree of uncertainty described (using the terms "probably" or "possibly" in the origin column, or at the end of the description).

Identification of minor components

Minor components are identified in the soil description immediately following the soil name. The minor component fraction is usually preceded with a term indicating the relative proportion of the component.

Minor Component Proportion Term	Relative Proportion	
	In Fine Grained Soil	In Coarse Grained Soil
With	All fractions: 15-30%	Clay/silt: 5-12% sand/gravel: 15-30%
Trace	All fractions: 0-15%	Clay/silt: 0-5% sand/gravel: 0-15%

The terms "with" and "trace" generally apply only to gravel or fine particle fractions. Where cobbles/boulders are encountered in minor proportions (generally less than about 12%) the term "occasional" may be used. This term describes the sporadic distribution of the material within the confines of the investigation excavation only, and there may be considerable variation in proportion over a wider area which is difficult to factually characterise due to the relative size of the particles and the investigation methods.

Soil Composition

Plasticity

Descriptive Term	Laboratory liquid limit range	
	Silt	Clay
Non-plastic materials	Not applicable	Not applicable
Low plasticity	≤50	≤35
Medium plasticity	Not applicable	>35 and ≤50
High plasticity	>50	>50

Note, Plasticity descriptions generally describe the plasticity behaviour of the whole of the fine grained soil, not individual fine grained fractions.

Grain Size

Type		Particle size (mm)
Gravel	Coarse	19 - 63
	Medium	6.7 - 19
	Fine	2.36 – 6.7
Sand	Coarse	0.6 - 2.36
	Medium	0.21 - 0.6
	Fine	0.075 - 0.21

Grading

Grading Term	Particle size (mm)
Well	A good representation of all particle sizes
Poorly	An excess or deficiency of particular sizes within the specified range
Uniformly	Essentially of one size
Gap	A deficiency of a particular size or size range within the total range

Note, AS1726-2017 provides terminology for additional attributes not listed here.

Soil Descriptions

Soil Condition

Moisture

The moisture condition of soils is assessed relative to the plastic limit for fine grained soils, while for coarse grained soils it is assessed based on the appearance and feel of the material. The moisture condition of a material is considered to be independent of stratigraphy (although commonly these are related), and this data is presented in its own column on logs.

Applicability	Term	Tactile Assessment	Abbreviation code
Fine	Dry of plastic limit	Hard and friable or powdery	w<PL
	Near plastic limit	Can be moulded	w=PL
	Wet of plastic limit	Water residue remains on hands when handling	w>PL
	Near liquid limit	"oozes" when agitated	w=LL
	Wet of liquid limit	"oozes"	w>LL
Coarse	Dry	Non-cohesive and free running	D
	Moist	Feels cool, darkened in colour, particles may stick together	M
	Wet	Feels cool, darkened in colour, particles may stick together, free water forms when handling	W

The abbreviation code NDF, meaning "not-assessable due to drilling fluid use" may also be used.

Note, observations relating to free ground water or drilling fluids are provided independent of soil moisture condition.

Consistency/Density/Compaction/Cementation/Extremely Weathered Material

These concepts give an indication of how the material may respond to applied forces (when considered in conjunction with other attributes of the soil). This behaviour can vary independent of the composition of the material, and on logs these are described in an independent column and are generally mutually exclusive (i.e it is inappropriate to describe both consistency and compaction at the same time). The method by which the behaviour is described depends on the behaviour model and other characteristics of the soil as follows:

- In fine grained soils, the "consistency" describes the ease with which the soil can be remoulded, and is generally correlated against the materials undrained shear strength;
- In granular materials, the relative density describes how tightly packed the particles are, and is generally correlated against the density index;
- In anthropogenically modified materials, the compaction of the material is described qualitatively;
- In cemented soils (both natural and anthropogenic), the cemented "strength" is described qualitatively, relative to the difficulty with which the material is disaggregated; and
- In soils of extremely weathered material origin, the engineering behaviour may be governed by relic rock features, and expected behaviour needs to be assessed based the overall material description.

Quantitative engineering performance of these materials may be determined by laboratory testing or estimated by correlated field tests (for example penetration or shear vane testing). In some cases, performance may be assessed by tactile or other subjective methods, in which case investigation logs will show the estimated value enclosed in round brackets, for example (VS).

Consistency (fine grained soils)

Consistency Term	Tactile Assessment	Undrained Shear Strength (kPa)	Abbreviation Code
Very soft	Extrudes between fingers when squeezed	<12	VS
Soft	Mouldable with light finger pressure	>12 - ≤25	S
Firm	Mouldable with strong finger pressure	>25 - ≤50	F
Stiff	Cannot be moulded by fingers	>50 - ≤100	St
Very stiff	Indented by thumbnail	>100 - ≤200	VSt
Hard	Indented by thumbnail with difficulty	>200	H
Friable	Easily crumbled or broken into small pieces by hand	-	Fr

Relative Density (coarse grained soils)

Relative Density Term	Density Index	Abbreviation Code
Very loose	<15	VL
Loose	>15 - ≤35	L
Medium dense	>35 - ≤65	MD
Dense	>65 - ≤85	D
Very dense	>85	VD

Note, tactile assessment of relative density is difficult, and generally requires penetration testing, hence a tactile assessment guide is not provided

Soil Descriptions

Compaction (anthropogenically modified soil)

Compaction Term	Abbreviation Code
Well compacted	WC
Poorly compacted	PC
Moderately compacted	MC
Variably compacted	VC

Cementation (natural and anthropogenic)

Cementation Term	Abbreviation Code
Moderately cemented	MOD
Weakly cemented	WEK

Extremely Weathered Material

AS1726-2017 considers weathered material to be soil if the unconfined compressive strength is less than 0.6 MPa (i.e. less than very low strength rock). These materials may be identified as "extremely weathered material" in reports and by the abbreviation code XWM on log sheets. This identification is not correlated to any specific qualitative or quantitative behaviour, and the engineering properties of this material must therefore be assessed according to engineering principles with reference to any relic rock structure, fabric, or texture described in the description.

Soil Origin

Term	Description	Abbreviation Code
Residual	Derived from in-situ weathering of the underlying rock	RS
Extremely weathered material	Formed from in-situ weathering of geological formations. Has strength of less than 'very low' as per as1726 but retains the structure or fabric of the parent rock.	XWM
Alluvial	Deposited by streams and rivers	ALV
Fluvial	Deposited by channel fill and overbank (natural levee, crevasse splay or flood basin)	FLV
Estuarine	Deposited in coastal estuaries	EST
Marine	Deposited in a marine environment	MAR
Lacustrine	Deposited in freshwater lakes	LAC
Aeolian	Carried and deposited by wind	AEO
Colluvial	Soil and rock debris transported down slopes by gravity	COL
Slopewash	Thin layers of soil and rock debris gradually and slowly deposited by gravity and possibly water	SW
Topsoil	Mantle of surface soil, often with high levels of organic material	TOP
Fill	Any material which has been moved by man	FILL
Littoral	Deposited on the lake or seashore	LIT
Unidentifiable	Not able to be identified	UID

Cobbles and Boulders

The presence of particles considered to be "oversize" may be described using one of the following strategies:

- Oversize encountered in a minor proportion (when considered relative to the wider area) are noted in the soil description; or
- Where a significant proportion of oversize is encountered, the cobbles/boulders are described independent of the soil description, in a similar manner to composite soils (described above) but qualified with "MIXTURE OF".

intentionally blank

Rock Strength

Rock strength is defined by the unconfined compressive strength, and it refers to the strength of the rock substance and not the strength of the overall rock mass, which may be considerably weaker due to defects.

The Point Load Strength Index $I_{s(50)}$ is commonly used to provide an estimate of the rock strength and site specific correlations should be developed to allow UCS values to be determined. The point load strength test procedure is described by Australian Standard AS4133.4.1-2007. The terms used to describe rock strength are as follows:

Strength Term	Unconfined Compressive Strength (MPa)	Point Load Index[1] $I_{s(50)}$ MPa	Abbreviation Code
Very low	0.6 - 2	0.03 - 0.1	VL
Low	2 - 6	0.1 - 0.3	L
Medium	6 - 20	0.3 - 1.0	M
High	20 - 60	1 - 3	H
Very high	60 - 200	3 - 10	VH
Extremely high	>200	>10	EH

[1] Rock strength classification is based on UCS. The UCS to $I_{s(50)}$ ratio varies significantly for different rock types and specific ratios may be required for each site. The point load Index ranges shown above are as suggested in AS1726 and should not be relied upon without supporting evidence.

The following abbreviation codes are used for soil layers or seams of material "within rock" but for which the equivalent UCS strength is less than 0.6 MPa.

Scenario	Abbreviation Code
The material encountered has an equivalent UCS strength of less than 0.6 MPa, and therefore is considered to be soil (as per Note 1 of Table 20 of AS 1726-2017). The properties of the material encountered over this interval are described in the "Description of Strata" and soil properties columns.	SOIL
The material encountered has an equivalent UCS strength of less than 0.6 MPa, and therefore is considered to be soil (as per Note 1 of Table 20 of AS 1726-2017). The prominence of the material is such that it can be considered to be a seam (as defined in Table 22 of AS1726-2017) and the properties of the material are described in the defect column.	SEAM

Degree of Weathering

The degree of weathering of rock is classified as follows:

Weathering Term	Description	Abbreviation Code
Residual Soil[1]	Material is weathered to such an extent that it has soil properties. Mass structure and material texture and fabric of original rock are no longer visible, but the soil has not been significantly transported.	RS
Extremely weathered[1]	Material is weathered to such an extent that it has soil properties. Mass structure and material texture and fabric of original rock are still visible	XW
Highly weathered	The whole of the rock material is discoloured, usually by iron staining or bleaching to the extent that the colour of the original rock is not recognisable. Rock strength is significantly changed by weathering. Some primary minerals have weathered to clay minerals. Porosity may be increased by leaching or may be decreased due to deposition of weathering products in pores.	HW
Moderately weathered	The whole of the rock material is discoloured, usually by iron staining or bleaching to the extent that the colour of the original rock is not recognisable but shows little or no change of strength from fresh rock.	MW
Slightly weathered	Rock is partially discoloured with staining or bleaching along joints but shows little or no change of strength from fresh rock.	SW
Fresh	No signs of decomposition or staining.	FR
Note: If HW and MW cannot be differentiated use DW (see below)		
Distinctly weathered	Rock strength usually changed by weathering. The rock may be highly discoloured, usually by iron staining. Porosity may be increased by leaching or may be decreased due to deposition of weathered products in pores.	DW

[1] The parent rock type, of which the residual/extremely weathered material is a derivative, will be stated in the description (where discernible).

Degree of Alteration

The degree of alteration of the rock material (physical or chemical changes caused by hot gasses or liquids at depth) is classified as follows:

Term	Description	Abbreviation Code
Extremely altered	Material is altered to such an extent that it has soil properties. Mass structure and material texture and fabric of original rock are still visible.	XA
Highly altered	The whole of the rock material is discoloured, usually by staining or bleaching to the extent that the colour of the original rock is not recognisable. Rock strength is changed by alteration. Some primary minerals are altered to clay minerals. Porosity may be increased by leaching or may be decreased due to precipitation of secondary materials in pores.	HA
Moderately altered	The whole of the rock material is discoloured, usually by staining or bleaching to the extent that the colour of the original rock is not recognisable but shows little or no change of strength from fresh rock.	MA
Slightly altered	Rock is slightly discoloured but shows little or no change of strength from fresh rock	SA
Note: If HA and MA cannot be differentiated use DA (see below)		
Distinctly altered	Rock strength usually changed by alteration. The rock may be highly discoloured, usually by staining or bleaching. Porosity may be increased by leaching or may be decreased due to precipitation of secondary minerals in pores.	DA

Degree of Fracturing

The following descriptive classification apply to the spacing of natural occurring fractures in the rock mass. It includes bedding plane partings, joints and other defects, but excludes drilling breaks. These terms are generally not required on investigation logs where fracture spacing is presented as a histogram, and where used are presented in an unabbreviated format.

Term	Description
Fragmented	Fragments of <20 mm
Highly Fractured	Core lengths of 20-40 mm with occasional fragments
Fractured	Core lengths of 30-100 mm with occasional shorter and longer sections
Slightly Fractured	Core lengths of 300 mm or longer with occasional sections of 100-300 mm
Unbroken	Core contains very few fractures

Rock Quality Designation

The quality of the cored rock can be measured using the Rock Quality Designation (RQD) index, defined as:

$$\text{RQD \%} = \frac{\text{cumulative length of 'sound' core sections} > \text{100 mm long}}{\text{total drilled length of section being assessed}}$$

where 'sound' rock is assessed to be rock of low strength or stronger. The RQD applies only to natural fractures. If the core is broken by drilling or handling (i.e., drilling breaks) then the broken pieces are fitted back together and are not included in the calculation of RQD.

Stratification Spacing

These terms may be used to describe the spacing of bedding partings in sedimentary rocks. Where used, these terms are generally presented in an unabbreviated format

Term	Separation of Stratification Planes
Thinly laminated	< 6 mm
Laminated	6 mm to 20 mm
Very thinly bedded	20 mm to 60 mm
Thinly bedded	60 mm to 0.2 m
Medium bedded	0.2 m to 0.6 m
Thickly bedded	0.6 m to 2 m
Very thickly bedded	> 2 m

Rock Descriptions

Defect Descriptions

Defect Type

Term	Abbreviation Code
Bedding plane	B
Cleavage	CL
Crushed seam	CS
Crushed zone	CZ
Drilling break	DB
Decomposed seam	DS
Drill lift	DL
Extremely Weathered seam	EW
Fault	F
Fracture	FC
Fragmented	FG
Handling break	HB
Infilled seam	IS
Joint	JT
Lamination	LAM
Shear seam	SS
Shear zone	SZ
Vein	VN
Mechanical break	MB
Parting	P
Sheared Surface	S

Rock Defect Orientation

Term	Abbreviation Code
Horizontal	H
Vertical	V
Sub-horizontal	SH
Sub-vertical	SV

Rock Defect Coating

Term	Abbreviation Code
Clean	CN
Coating	CT
Healed	HE
Infilled	INF
Stained	SN
Tight	TI
Veneer	VNR

Rock Defect Infill

Term	Abbreviation Code
Calcite	CA
Carbonaceous	CBS
Clay	CLAY
Iron oxide	FE
Manganese	MN
Pyrite	Py
Secondary material	MS
Silt	M
Quartz	Qz
Unidentified material	MU

Rock Defect Shape/Planarity

Term	Abbreviation Code
Curved	CU
Discontinuous	DIS
Irregular	IR
Planar	PR
Stepped	ST
Undulating	UN

Rock Defect Roughness

Term	Abbreviation Code
Polished	PO
Rough	RF
Smooth	SM
Slickensided	SL
Very rough	VR

Defect Orientation
The inclination of defects is always measured from the perpendicular to the core axis

intentionally blank

Sampling and Testing

A record of samples retained, and field testing performed is usually shown on a Douglas Partners' log with samples appearing to the left of a depth scale, and selected field and laboratory testing (including results, where relevant) appearing to the right of the scale, as illustrated below:

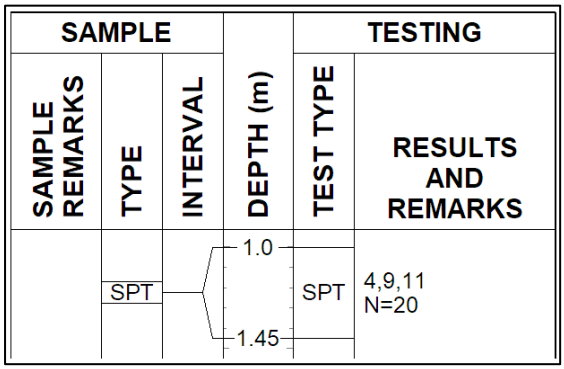

Sampling

The type or intended purpose for which a sample was taken is indicated by the following abbreviation codes.

Sample Type	Code
Auger sample	A
Acid Sulfate sample	ASS
Bulk sample	B
Core sample	C
Disturbed sample	D
Environmental sample	ES
Gas sample	G
Piston sample	P
Sample from SPT test	SPT
Undisturbed tube sample	U[1]
Water sample	W
Material Sample	MT
Core sample for unconfined compressive strength testing	UCS

[1] – numeric suffixes indicate tube diameter/width in mm

The above codes only indicate that a sample was retained, and not that testing was scheduled or performed.

Field and Laboratory Testing

A record that field and laboratory testing was performed is indicated by the following abbreviation codes.

Test Type	Code
Pocket penetrometer (kPa)	PP
Photo ionisation detector (ppm)	PID
Standard Penetration Test x/y = x blows for y mm penetration HB = hammer bouncing HW = fell under weight of hammer	SPT
Shear vane (kPa)	V
Unconfined compressive strength, (MPa)	UCS

Field and laboratory testing (continued)

Test Type	Code
Point load test, (MPa), axial (A), diametric (D), irregular (I)	PLT(_)
Dynamic cone penetrometer, followed by blow count penetration increment in mm (cone tip, generally in accordance with AS1289.6.3.2)	DCP/150
Perth sand penetrometer, followed by blow count penetration increment in mm (flat tip, generally in accordance with AS1289.6.3.3)	PSP/150

Groundwater Observations

▷	seepage/inflow
▽	standing or observed water level
NFGWO	no free groundwater observed
OBS	observations obscured by drilling fluids

Drilling or Excavation Methods/Tools

The drilling/excavation methods used to perform the investigation may be shown either in a dedicated column down the left-hand edge of the log, or stated in the log footer. In some circumstances abbreviation codes may be used.

Method	Abbreviation Code
Direct Push	DP
Solid flight auger. Suffixes: /T = tungsten carbide tip, /V = v-shaped tip	AD[1]
Air Track	AT
Diatube	DT[1]
Hand auger	HA[1]
Hand tools (unspecified)	HAND
Existing exposure	X
Hollow flight auger	HSA[1]
HQ coring	HQ3
HMLC series coring	HMLC
NMLC series coring	NMLC
NQ coring	NQ3
PQ coring	PQ3
Predrilled	PD
Push tube	PT[1]
Ripping tyne/ripper	R
Rock roller	RR[1]
Rock breaker/hydraulic hammer	EH
Sonic drilling	SON[1]
Mud/blade bucket	MB[1]
Toothed bucket	TB[1]
Vibrocore	VC[1]
Vacuum excavation	VE
Wash bore (unspecified bit type)	WB[1]

[1] – numeric suffixes indicate tool diameter/width in mm

FOUNDATION MAINTENANCE AND FOOTING PERFORMANCE

Understanding and preventing soil-related building movement

This Building Technology Resource is designed to identify causes of soil-related building movement, and to suggest methods of prevention of resultant cracking.

Buildings can and often do move. This movement can be up, down, lateral or rotational. The fundamental cause of movement in buildings can usually be related to one or more problems in the foundation soil. It is important for the home owner to identify the soil type in order to ascertain the measures that should be put in place in order to ensure that problems in the foundation soil can be prevented, thus protecting against building movement.

SOIL TYPES

The types of soils usually present under the topsoil in land zoned for residential buildings can be split into two approximate groups – granular and clay. Quite often, foundation soil is a mixture of both types. The general problems associated with soils having granular content are usually caused by erosion. Clay soils are subject to saturation and swell/shrink problems.

Classifications for a given area can generally be obtained by application to the local authority, but these are sometimes unreliable and if there is doubt, a geotechnical report should be commissioned. As most buildings suffering movement problems are founded on clay soils, there is an emphasis on classification of soils according to the amount of swell and shrinkage they experience with variations of water content. Table 1 below is a reproduction of Table 2.1 from Australian Standard AS 2870-2011, Residential slabs and footings.

CAUSES OF MOVEMENT

SETTLEMENT DUE TO CONSTRUCTION

There are two types of settlement that occur as a result of construction:

- Immediate settlement occurs when a building is first placed on its foundation soil, as a result of compaction of the soil under the weight of the structure. The cohesive quality of clay soil mitigates against this, but granular (particularly sandy) soil is susceptible.
- Consolidation settlement is a feature of clay soil and may take place because of the expulsion of moisture from the soil or because of the soil's lack of resistance to local compressive or shear stresses. This will usually take place during the first few months after construction but has been known to take many years in exceptional cases.

These problems may be the province of the builder and should be taken into consideration as part of the preparation of the site for construction.

EROSION

All soils are prone to erosion, but sandy soil is particularly susceptible to being washed away. Even clay with a sand component of say 10% or more can suffer from erosion.

SATURATION

This is particularly a problem in clay soils. Saturation creates a bog-like suspension of the soil that causes it to lose virtually all of its bearing capacity. To a lesser degree, sand is affected by saturation because saturated sand may undergo a reduction in volume, particularly imported sand fill for bedding and blinding layers. However, this usually occurs as immediate settlement and should normally be the province of the builder.

SEASONAL SWELLING AND SHRINKAGE OF SOIL

All clays react to the presence of water by slowly absorbing it, making the soil increase in volume (see table below, from AS 2870). The degree of increase varies considerably between different clays, as does the degree of decrease during the subsequent drying out caused by fair weather periods. Because of the low absorption and expulsion rate, this phenomenon will not usually be noticeable unless there are prolonged rainy or dry periods, usually of weeks or months, depending on the land and soil characteristics.

The swelling of soil creates an upward force on the footings of the building, and shrinkage creates subsidence that takes away the support needed by the footing to retain equilibrium.

SHEAR FAILURE

This phenomenon occurs when the foundation soil does not have sufficient strength to support the weight of the footing. There are two major post-construction causes:

- Significant load increase.
- Reduction of lateral support of the soil under the footing due to erosion or excavation.

In clay soil, shear failure can be caused by saturation of the soil adjacent to or under the footing.

TREE ROOT GROWTH

Trees and shrubs that are allowed to grow in the vicinity of footings can cause foundation soil movement in two ways:

- Roots that grow under footings may increase in cross-sectional size, exerting upward pressure on footings.

TABLE 1. GENERAL DEFINITIONS OF SITE CLASSES.

Class	Foundation
A	Most sand and rock sites with little or no ground movement from moisture changes
S	Slightly reactive clay sites, which may experience only slight ground movement from moisture changes
M	Moderately reactive clay or silt sites, which may experience moderate ground movement from moisture changes
H1	Highly reactive clay sites, which may experience high ground movement from moisture changes
H2	Highly reactive clay sites, which may experience very high ground movement from moisture changes
F	Extremely reactive sites, which may experience extreme ground movement from moisture changes

Source: Reproduced with the permission of Standards Australia Limited © 2011. Copyright in AS 2870-2011 Residential slabs and footings vests in Standards Australia Limited.

© CSIRO 2021

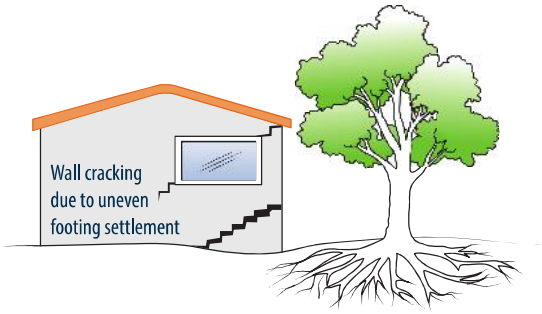

FIGURE 1 Trees can cause shrinkage and damage.

- Roots in the vicinity of footings will absorb much of the moisture in the foundation soil, causing shrinkage or subsidence.

UNEVENNESS OF MOVEMENT

The types of ground movement described above usually occur unevenly throughout the building's foundation soil. Settlement due to construction tends to be uneven because of:

- Differing compaction of foundation soil prior to construction.
- Differing moisture content of foundation soil prior to construction.

Movement due to non-construction causes is usually more uneven still. Erosion can undermine a footing that traverses the flow or can create the conditions for shear failure by eroding soil adjacent to a footing that runs in the same direction as the flow.

Saturation of clay foundation soil may occur where subfloor walls create a dam that makes water pond. It can also occur wherever there is a source of water near footings in clay soil. This leads to a severe reduction in the strength of the soil which may create local shear failure.

Seasonal swelling and shrinkage of clay soil affects the perimeter of the building first, then gradually spreads to the interior through absorption. The swelling process will usually begin at the uphill extreme of the building, or on the weather side where the land is flat. Shrinkage usually begins on the side of the building where the sun's heat is greatest.

EFFECTS OF UNEVEN SOIL MOVEMENT ON STRUCTURES

EROSION AND SATURATION

Erosion removes the support from under footings, tending to create subsidence of the part of the structure under which it occurs. Brickwork walls will resist the stress created by this removal of support by bridging the gap or cantilevering until the bricks or the mortar bedding fail. Older masonry has little resistance. Evidence of failure varies according to circumstances and symptoms may include:

- Step cracking in the mortar beds in the body of the wall or above/below openings such as doors or windows.
- Vertical cracking in the bricks (usually but not necessarily in line with the vertical beds or perpends).

Isolated piers affected by erosion or saturation of foundations will eventually lose contact with the bearers they support and may tilt or fall over. The floors that have lost this support will become bouncy, sometimes rattling ornaments etc.

SEASONAL SWELLING/SHRINKAGE IN CLAY

Swelling foundation soil due to rainy periods first lifts the most exposed extremities of the footing system, then the remainder of the perimeter footings while gradually permeating inside the building footprint to lift internal footings. This swelling first tends to create a dish effect, because the external footings are pushed higher than the internal ones.

The first noticeable symptom may be that the floor appears slightly dished. This is often accompanied by some doors binding on the floor or the door head, together with some cracking of cornice mitres. In buildings with timber flooring supported by bearers and joists, the floor can be bouncy. Externally there may be visible dishing of the hip or ridge lines.

As the moisture absorption process completes its journey to the innermost areas of the building, the internal footings will rise. If the spread of moisture is roughly even, it may be that the symptoms will temporarily disappear, but it is more likely that swelling will be uneven, creating a difference rather than a disappearance in symptoms. In buildings with timber flooring supported by bearers and joists, the isolated piers will rise more easily than the strip footings or piers under walls, creating noticeable doming of flooring.

As the weather pattern changes and the soil begins to dry out, the external footings will be first affected, beginning with the locations where the sun's effect is strongest. This has the effect of lowering the external footings. The doming is accentuated, and cracking reduces or disappears where it occurred because of dishing, but other cracks open up. The roof lines may become convex.

Doming and dishing are also affected by weather in other ways. In areas where warm, wet summers and cooler dry winters prevail, water migration tends to be toward the interior and doming will be accentuated, whereas where summers are dry, and winters are cold and wet, migration tends to be toward the exterior and the underlying propensity is toward dishing.

MOVEMENT CAUSED BY TREE ROOTS

In general, growing roots will exert an upward pressure on footings, whereas soil subject to drying because of tree or shrub roots will tend to remove support from under footings by inducing shrinkage.

COMPLICATIONS CAUSED BY THE STRUCTURE ITSELF

Most forces that the soil causes to be exerted on structures are vertical – i.e. either up or down. However, because these forces are seldom spread evenly around the footings, and because the building resists uneven movement because of its rigidity, forces are exerted from one part of the building to another. The net result of all these forces is usually rotational. This resultant force often complicates the diagnosis because the visible symptoms do not simply reflect the original cause. A common symptom is binding of doors on the vertical member of the frame.

EFFECTS ON FULL MASONRY STRUCTURES

Brickwork will resist cracking where it can. It will attempt to span areas that lose support because of subsided foundations or raised points. It is therefore usual to see cracking at weak points, such as openings for windows or doors.

In the event of construction settlement, cracking will usually remain unchanged after the process of settlement has ceased.

With local shear or erosion, cracking will usually continue to develop until the original cause has been remedied, or until the subsidence has completely neutralised the affected portion of footing and the structure has stabilised on other footings that remain effective.

In the case of swell/shrink effects, the brickwork will in some cases return to its original position after completion of a cycle, however it is more likely that the rotational effect will not be exactly reversed, and it is also usual that brickwork will settle in its new position and will resist the forces trying to return it to its original position. This means that in a case where swelling takes place after construction and cracking occurs, the cracking is likely to at least partly remain after the shrink segment of the cycle is complete. Thus, each time the cycle is repeated, the likelihood is that the cracking will become wider until the sections of brickwork become virtually independent.

With repeated cycles, once the cracking is established, if there is no other complication, it is normal for the incidence of cracking to stabilise, as the building has the articulation it needs to cope with the problem. This is by no means always the case, however, and monitoring of cracks in walls and floors should always be treated seriously.

Upheaval caused by growth of tree roots under footings is not a simple vertical shear stress. There is a tendency for the root to also

© CSIRO 2021

exert lateral forces that attempt to separate sections of brickwork after initial cracking has occurred.

The normal structural arrangement is that the inner leaf of brickwork in the external walls and at least some of the internal walls (depending on the roof type) comprise the load-bearing structure on which any upper floors, ceilings and the roof are supported. In these cases, it is internally visible cracking that should be the main focus of attention, however there are a few examples of dwellings whose external leaf of masonry plays some supporting role, so this should be checked if there is any doubt. In any case, externally visible cracking is important as a guide to stresses on the structure generally, and it should also be remembered that the external walls must be capable of supporting themselves.

EFFECTS ON FRAMED STRUCTURES

Timber or steel framed buildings are less likely to exhibit cracking due to swell/shrink than masonry buildings because of their flexibility. Also, the doming/dishing effects tend to be lower because of the lighter weight of walls. The main risks to framed buildings are encountered because of the isolated pier footings used under walls. Where erosion or saturation causes a footing to fall away, this can double the span which a wall must bridge. This additional stress can create cracking in wall linings, particularly where there is a weak point in the structure caused by a door or window opening. It is, however, unlikely that framed structures will be so stressed as to suffer serious damage without first exhibiting some or all of the above symptoms for a considerable period. The same warning period should apply in the case of upheaval. It should be noted, however, that where framed buildings are supported by strip footings there is only one leaf of brickwork and therefore the externally visible walls are the supporting structure for the building. In this case, the subfloor masonry walls can be expected to behave as full brickwork walls.

EFFECTS ON BRICK VENEER STRUCTURES

Because the load-bearing structure of a brick veneer building is the frame that makes up the interior leaf of the external walls plus perhaps the internal walls, depending on the type of roof, the building can be expected to behave as a framed structure, except that the external masonry will behave in a similar way to the external leaf of a full masonry structure.

WATER SERVICE AND DRAINAGE

Where a water service pipe, a sewer or stormwater drainage pipe is in the vicinity of a building, a water leak can cause erosion, swelling or saturation of susceptible soil. Even a minuscule leak can be enough to saturate a clay foundation. A leaking tap near a building can have the same effect. In addition, trenches containing pipes can become watercourses even though backfilled, particularly where broken rubble is used as fill. Water that runs along these trenches can be responsible for serious erosion, interstrata seepage into subfloor areas and saturation.

Pipe leakage and trench water flows also encourage tree and shrub roots to the source of water, complicating and exacerbating the problem. Poor roof plumbing can result in large volumes of rainwater being concentrated in a small area of soil:

- Incorrect falls in roof guttering may result in overflows, as may gutters blocked with leaves etc.
- Corroded guttering or downpipes can spill water to ground.
- Downpipes not positively connected to a proper stormwater collection system will direct a concentration of water to soil that is directly adjacent to footings, sometimes causing large-scale problems such as erosion, saturation and migration of water under the building.

SERIOUSNESS OF CRACKING

In general, most cracking found in masonry walls is a cosmetic nuisance only and can be kept in repair or even ignored. Table 2 below is a reproduction of Table C1 of AS 2870-2011.

AS 2870-2011 also publishes figures relating to cracking in concrete floors, however because wall cracking will usually reach the critical point significantly earlier than cracking in slabs, this table is not reproduced here.

PREVENTION AND CURE

PLUMBING

Where building movement is caused by water service, roof plumbing, sewer or stormwater failure, the remedy is to repair the problem. It is prudent, however, to consider also rerouting pipes away from the building where possible and relocating taps to positions where any leakage will not direct water to the building vicinity. Even where gully traps are present, there is sometimes sufficient spill to create erosion or saturation, particularly in modern installations using smaller diameter PVC fixtures. Indeed, some gully traps are not situated directly under the taps that are installed to charge them, with the result that water from the tap may enter the backfilled trench that houses the sewer piping. If the trench has been poorly backfilled, the water will either pond or flow along the bottom of the trench. As these trenches usually run alongside the footings and can be at a similar depth, it is not hard to see how any water that is thus directed into a trench can easily affect the foundation's ability to support footings or even gain entry to the subfloor area.

GROUND DRAINAGE

In all soils there is the capacity for water to travel on the surface and below it. Surface water flows can be established by inspection during and after heavy or prolonged rain. If necessary, a grated drain system connected to the stormwater collection system is usually an easy solution.

It is, however, sometimes necessary when attempting to prevent water migration that testing be carried out to establish watertable height and subsoil water flows. This subject may be regarded as an area for an expert consultant.

PROTECTION OF THE BUILDING PERIMETER

It is essential to remember that the soil that affects footings extends well beyond the actual building line. Watering of garden plants, shrubs and trees causes some of the most serious water problems.

For this reason, particularly where problems exist or are likely to occur, it is recommended that an apron of paving be installed around as much of the building perimeter as necessary. This paving should extend outwards a minimum of 900 mm (more in highly reactive soil) and should have a minimum fall away from the building of 1:60. The finished paving should be no less than 100 mm below brick vent bases.

It is prudent to relocate drainage pipes away from this paving, if possible, to avoid complications from future leakage. If this is not practical, earthenware pipes should be replaced by PVC and backfilling should be of the same soil type as the surrounding soil and compacted to the same density.

Except in areas where freezing of water is an issue, it is wise to remove taps in the building area and relocate them well away from the building – preferably not uphill.

It may be desirable to install a grated drain at the outside edge of the paving on the uphill side of the building. If subsoil drainage is needed this can be installed under the surface drain.

CONDENSATION

In buildings with a subfloor void, such as where bearers and joists support flooring, insufficient ventilation creates ideal conditions for condensation, particularly where there is little clearance between the floor and the ground. Condensation adds to the moisture already present in the subfloor and significantly slows the process of drying out. Installation of an adequate subfloor ventilation system, either natural or mechanical, is desirable.

© CSIRO 2021

TABLE 2. CLASSIFICATION OF DAMAGE WITH REFERENCE TO WALLS.

Description of typical damage and required repair	Approximate crack width limit	Damage category
Hairline cracks	<0.1 mm	0 – Negligible
Fine cracks which do not need repair	<1 mm	1 – Very Slight
Cracks noticeable but easily filled. Doors and windows stick slightly.	<5 mm	2 – Slight
Cracks can be repaired and possibly a small amount of wall will need to be replaced. Doors and windows stick. Service pipes can fracture. Weathertightness often impaired.	5–15 mm (or a number of cracks 3 mm or more in one group)	3 – Moderate
Extensive repair work involving breaking-out and replacing sections of walls, especially over doors and windows. Window and door frames distort. Walls lean or bulge noticeably, some loss of bearing in beams. Service pipes disrupted.	15–25 mm but also depends on number of cracks	4 – Severe

Source: Reproduced with the permission of Standards Australia Limited © 2011. Copyright in AS 2870-2011 Residential slabs and footings vests in Standards Australia Limited.

Warning: Although this Building Technology Resource deals with cracking in buildings, it should be said that subfloor moisture can result in the development of other problems, notably:

- Water that is transmitted into masonry, metal or timber building elements causes damage and/or decay to those elements.
- High subfloor humidity and moisture content create an ideal environment for various pests, including termites and spiders, and mould.
- Where high moisture levels are transmitted to the flooring and walls, an increase in the dust mite count can ensue within the living areas. Dust mites, as well as dampness in general, can be a health hazard to inhabitants, particularly those who are abnormally susceptible to respiratory ailments.

THE GARDEN

The ideal vegetation layout is to have lawn or plants that require only light watering immediately adjacent to the drainage or paving edge, then more demanding plants, shrubs and trees spread out in that order.

Overwatering due to misuse of automatic watering systems is a common cause of saturation and water migration under footings. If it is necessary to use these systems, it is important to remove garden beds to a completely safe distance from buildings.

EXISTING TREES

Where a tree is causing a problem of soil drying or there is the existence or threat of upheaval of footings, if the offending roots are subsidiary and their removal will not significantly damage the tree, they should be severed and a concrete or metal barrier placed vertically in the soil to prevent future root growth in the direction of the building. If it is not possible to remove the relevant roots without damage to the tree, an application to remove the tree should be made to the local authority. A prudent plan is to transplant likely offenders before they become a problem.

INFORMATION ON TREES, PLANTS AND SHRUBS

State departments overseeing agriculture can give information regarding root patterns, volume of water needed and safe distance from buildings of most species. Botanic gardens are also sources of information.

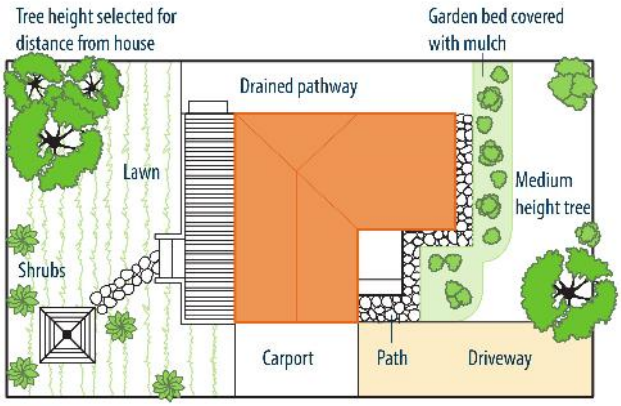

FIGURE 2 Gardens for a reactive site.

EXCAVATION

Excavation around footings must be properly engineered. Soil supporting footings can only be safely excavated at an angle that allows the soil under the footing to remain stable. This angle is called the angle of repose (or friction) and varies significantly between soil types and conditions. Removal of soil within the angle of repose will cause subsidence.

REMEDIATION

Where erosion has occurred that has washed away soil adjacent to footings, soil of the same classification should be introduced and compacted to the same density. Where footings have been undermined, augmentation or other specialist work may be required. Remediation of footings and foundations is generally the realm of a specialist consultant.

Where isolated footings rise and fall because of swell/shrink effect, the home owner may be tempted to alleviate floor bounce by filling the gap that has appeared between the bearer and the pier with blocking. The danger here is that when the next swell segment of the cycle occurs, the extra blocking will push the floor up into an accentuated dome and may also cause local shear failure in the soil. If it is necessary to use blocking, it should be by a pair of fine wedges and monitoring should be carried out fortnightly.

CSIROPUBLISHING

1300 788 000 | +61 3 9545 8400 | publishing.sales@csiro.au | www.publish.csiro.au
For information about CSIRO testing services visit www.csiro.au/en/work-with-us/services
ISBN 9781486312962 (print)/9781486312979 (digital) © CSIRO 2021
(replaces Building Technology File 18, 18-2011 and Information Sheet 10/91)
Unauthorised copying of this material is prohibited.

IMPORTANT DISCLAIMER: This information is prepared for Australia and general in nature. It may be incomplete or inapplicable in some cases.
Laws and regulations may vary in different places. Seek specialist advice for your particular circumstances.
To the extent permitted by law, CSIRO excludes all liability to any person for any loss, damage, cost or other consequence that may result from using this information.

© CSIRO 2021

TERMS AND CONDITIONS: BUILDING TECHNOLOGY RESOURCES

CONDITIONS OF USE

This publication may only be used in accordance with the following terms:

1. CSIRO (which for the purposes of these terms includes CSIRO Publishing) and its licensees own the copyright in the publication and will retain all rights, title and interest in and to the publication.
2. Once downloaded, the downloaded PDF publication may be provided by the user that initially downloads the PDF publication to other users by electronic mail once for each user licence purchased subject and pursuant to paragraph 4 below. The publication may not otherwise be copied or circulated electronically, including, for the avoidance of doubt, by electronic mail, even for internal use.
3. The downloaded publication may be printed, but the number of copies that may be printed is limited to the number of user licences purchased. That is, each user may print one (1) copy of the publication only.
4. The number of user licences purchased is shown on the tax invoice provided at the time of purchase. For the avoidance of doubt, the user that initially downloads the PDF publication shall be taken to be one (1) user. For example, if two (2) user licences are purchased, the publication may only be shared once to one (1) other user and printed once by each user (i.e. a maximum of two (2) hardcopy versions of the publication may be printed).
5. The publication (whether in PDF or printed format) may only be used for personal, internal, non-commercial purposes.
6. The publication and all its content is subject to copyright and unauthorised copying is prohibited.
7. Reproduction, renting, leasing, re-selling, sub-licensing, assignment or any supply of the publication, in print or electronically, is not permitted.
8. Retransmission, caching, networking or posting of the downloaded PDF publication is strictly prohibited.
9. Content may not be extracted for any reason and derivative works based on the publication are not permitted. The publication and any of its content may not be copied, reformatted, adapted, modified, translated, merged, reverse engineered, decompiled, dissembled or changed in any way and otherwise must not be used in a manner that would infringe the copyrights therein.
10. Ownership, copyright, trade mark, confidentiality or other marks or legends (including any digital watermark or similar) on or in the publication must not be removed, altered or obscured.
11. The security of the publication mut be protected at all times.
12. CSIRO will not provide any updating service for the publication. That is, purchasing the publication only entitles access to the publication as current at the date of purchase and does not entitle access to any amended, changed or updated version of the publication. CSIRO is not obliged to notify purchasers or users if the publication is amended, changed, updated or withdrawn after purchase.
13. If you purchased this publication via the CSIRO Publishing website, the PDF publication will remain available on the CSIRO Publishing website for 48 hours after purchasing. In the event of a communication problem during downloading, re-download the publication within 48 hours of purchase. After that time, the publication will no longer be accessible via the CSIRO Publishing website.
14. The right to use this publication pursuant to these terms will continue indefinitely, but will terminate automatically and without notice for any failure to comply with these terms. Upon termination all copies of the publication must be deleted and/or destroyed.
15. CSIRO nor any other person, to the extent permitted by law, has made or makes any representation or warranty of any kind in relation to the publication.
16. Without limiting the foregoing in any way, the information contained in the publication is general in nature. It may be incomplete or inapplicable in some cases. Laws and regulations may vary in different places. Seek specialist advice for your particular circumstances.
17. To the extent permitted by law, CSIRO excludes all liability to any person for any loss, damage, cost or other consequence that may result from using this publication and the information in it.
18. For reproduction of the publication or any portions or other use outside the circumstances set out in these terms, prior written permission of CSIRO must be sought. Please contact: publishing@csiro.au

TEST PIT LOG

CLIENT: Capital Estate Developments Pty Ltd
PROJECT: Proposed Residential Subdivision
LOCATION: Stage 7 Denman North Estate, Denman Prospect

SURFACE LEVEL: 585 AHD
COORDINATE: E:200921, N:602812
DATUM/GRID: ACT Stromlo
DIP/AZIMUTH: 90°/---°

LOCATION ID: 79
PROJECT No: 88231.60
DATE: 06/08/24
SHEET: 1 of 1

CONDITIONS ENCOUNTERED								SAMPLE				TESTING AND REMARKS	
GROUNDWATER	RL (m)	DEPTH (m)	DESCRIPTION OF STRATA	GRAPHIC	ORIGIN[#]	CONSIS.[*] DENSITY.[*]	MOISTURE	REMARKS	TYPE	INTERVAL	DEPTH (m)	TEST TYPE	RESULTS AND REMARKS
06/08/24 No free groundwater observed	584		FILL / Sandy Gravelly CLAY (CL), trace silt: brown; low plasticity; fine to coarse sand; fine to coarse gravel.		FILL	(VSt) to (H)	w<PL		D		0.50		
		0.60	FILL / Clayey Silty SAND (SC), with gravel: yellow brown; fine to coarse; fine to coarse gravel.		FILL	(D)	D		D		1.00		
	583												
			Test Pit discontinued at 1.60m depth. Limit of investigation.										

NOTES: [#] Soil origin is "probable" unless otherwise stated. [*] Consistency/Relative density shading is for visual reference only - no correlation between cohesive and granular materials is implied.

PLANT: CAT 306 CR mini excavator
OPERATOR: Bingley Electrical Pty Ltd
LOGGED: Miller
METHOD: 300mm wide bucket
REMARKS: Surface levels and coordinates are approximate only and must not be relied upon.

Refer to explanatory notes for symbol and abbreviation definitions

Douglas PARTNERS

Generated with CORE-GS by Geroc - Soil Log

TEST PIT LOG

CLIENT: Capital Estate Developments Pty Ltd
PROJECT: Proposed Residential Subdivision
LOCATION: Stage 7 Denman North Estate, Denman Prospect

SURFACE LEVEL: 584 AHD
COORDINATE: E:200940, N:602825
DATUM/GRID: ACT Stromlo
DIP/AZIMUTH: 90°/---°

LOCATION ID: 80
PROJECT No: 88231.60
DATE: 06/08/24
SHEET: 1 of 1

CONDITIONS ENCOUNTERED								SAMPLE				TESTING AND REMARKS	
GROUNDWATER	RL (m)	DEPTH (m)	DESCRIPTION OF STRATA	GRAPHIC	ORIGIN(#)	CONSIS.(*) / DENSITY.(*)	MOISTURE	REMARKS	TYPE	INTERVAL	DEPTH (m)	TEST TYPE	RESULTS AND REMARKS
06/08/24 No free groundwater observed			FILL / Silty Sandy CLAY (CL): brown; low plasticity; fine to coarse sand.		FILL	NA	w<PL						
		0.20	FILL / Sandy Gravelly CLAY (CL), trace silt: brown; low plasticity; fine to coarse sand; fine to coarse gravel.										
	583								D		0.50		
			0.80m-0.90m: pocket of high plasticity clay		FILL	(VSt) to (H)	w<PL						
									D		0.85		
		1							D		1.00		
	582		Test Pit discontinued at 1.30m depth. Slow progress in hard gravelly fill.										

NOTES: (#) Soil origin is "probable" unless otherwise stated. (*) Consistency/Relative density shading is for visual reference only - no correlation between cohesive and granular materials is implied.

PLANT: CAT 306 CR mini excavator
OPERATOR: Bingley Electrical Pty Ltd
LOGGED: Miller
METHOD: 300mm wide bucket
REMARKS: Surface levels and coordinates are approximate only and must not be relied upon.

Refer to explanatory notes for symbol and abbreviation definitions

Douglas PARTNERS

Generated with CORE-GS by Geroc - Soil Log

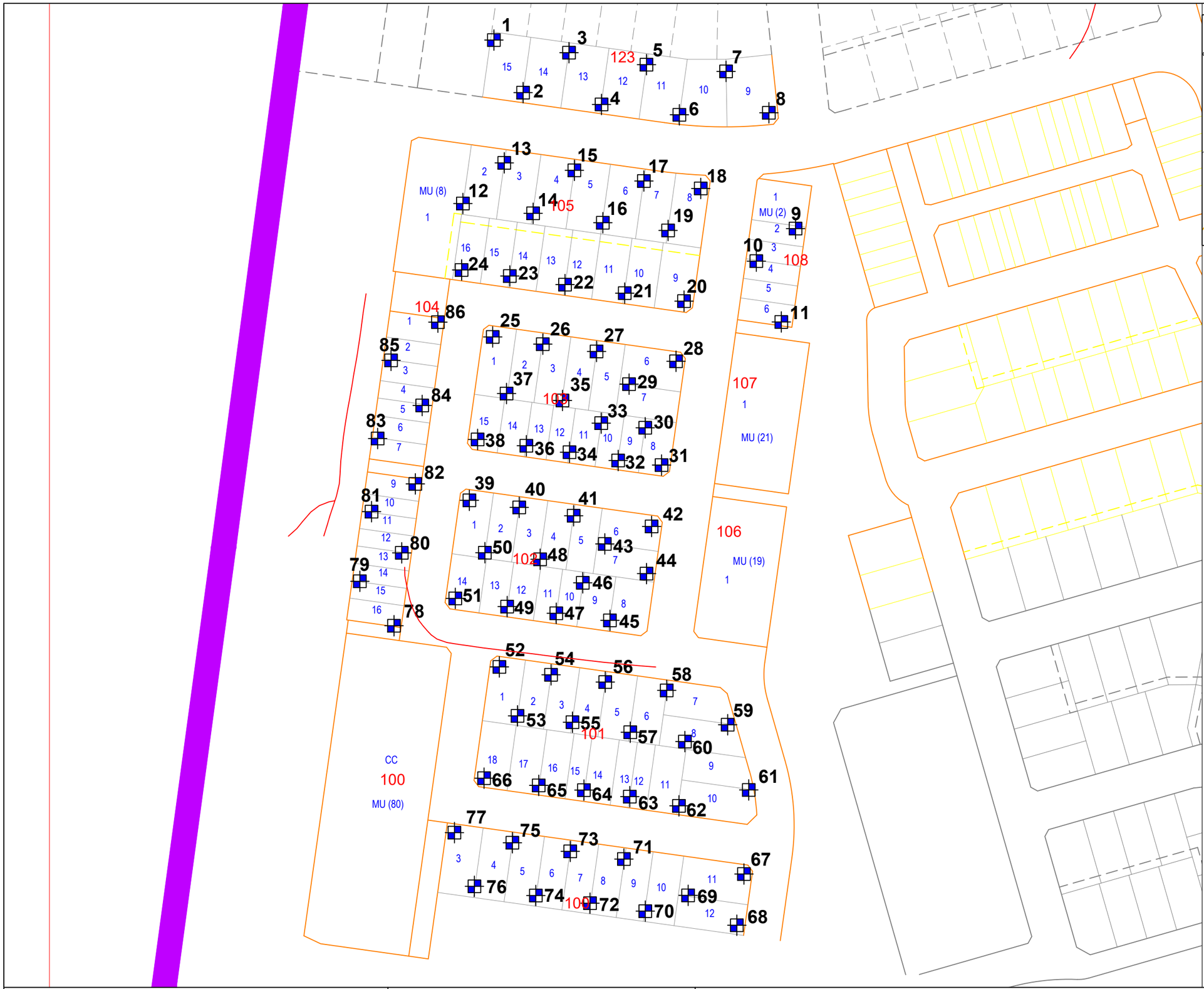

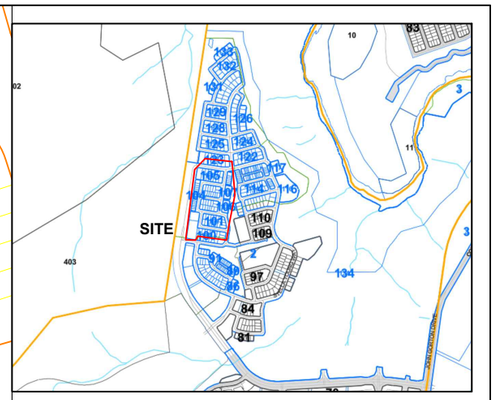

Locality Plan

LEGEND

Test Pit Location

Approximate Rubble Drain Alignment

0 17.5 35 52.5 70 87.5

1:1750 @ A3

NOTE: Base drawing from Huon (Drawing Depth Range Plot, dated 8 June 2023). Rubble Drain alignments from Capital Estate Developments Pty Ltd

Douglas PARTNERS

GROUNDED EXPERTISE

CLIENT: Capital Estate Developments Pty Ltd	TITLE: **Test Location Plan**	PROJECT No: 88231.60	
OFFICE: Canberra / DRAWN BY: FM	**Proposed Residential Subdivision**	DRAWING No: 1	
SCALE: As Shown / DATE: 29.09.25	**Stage 7 Denman Prospect, ACT**	REVISION: 1	

SITE CLASSIFICATION REPORT SUMMARY

BLOCK:	**15**	**SECTION:**	**104**	**SUBURB:**	**Denman Prospect**
JOB No:	**88231.60**			**DATE:**	**September 2025**
CLIENT:	**Capital Estate Developments Pty Ltd**			**REF:**	**R.071.Rev1**

Classification Procedures:

Existing Subsurface Conditions: Refer attached test pit log(s) – Pit(s) 78,79 and Drawing 1 Rev1.

Bulk Earthworks: Based on Douglas Partners records, controlled fill was placed within the block under Level 1 control as defined in AS 3798:2007 during subdivision construction.

Laboratory Results: Previous laboratory testing results indicated liquid limit ranging from 25-80%, plasticity index ranging from 12-57% and linear shrinkage ranging from 6-20%.

Site Classification: Site classification in accordance with AS2870:2011 provides guidance on the patterns and magnitude of moisture related seasonal ground movements that must be considered in design. Based on the current soil profile / state, on limited subsurface information, soil reactivity and allowing for variation in the subsoil profile, the soil profile would be equivalent to Class M* (moderately reactive/filled) conditions. The site classification must be reassessed should the subsurface profile change by either cutting or filling and/or if the presence of service trenches, retaining walls or submerged structures are within the zone of influence of the proposed footings. Reference must be made to the comments provided below.

Footing Systems: Reference must be made to AS2870:2011 which indicates footing systems that are appropriate for each site classification. All footings must found within a uniform bearing stratum of suitable strength/material, below the zone of influence of any service trenches, backfill zones, retaining walls or underground structures. Masonry walls should be articulated in accordance with current best practice. Dwelling design must ensure suitable drainage and uniform moisture conditions are maintained in the vicinity of footings. Footing systems must be confirmed by a structural engineer taking into consideration any onsite or offsite constraints.

Maintenance Guidelines: Reference should be made to the attached CSIRO Sheet BTF 18 'Foundation Maintenance & Footing Performance' to comments about gardens, landscaping and trees on the performance of foundation soils and in particular in respect to maintaining good surface drainage. It notes that minor cracking in most structures is inevitable, and it describes site maintenance practices aimed at minimising foundation movements that can lead to cracking damage.

Comments/Limitations:

The successful purchaser must make their own interpretations, deductions and conclusions from the information made available and will need to accept full responsibility for such interpretations, deductions and conclusions. To that end development specific geotechnical investigations must be undertaken and it is recommended that footing excavations be inspected by a geotechnical engineer.

Some variability in subsurface conditions must be anticipated with the possibility additional topsoils / fill may have been spread subsequent to the investigation.

Site preparation prior to the construction should include removal of all vegetation, topsoil and any uncontrolled fill and all new fill must be placed under controlled conditions (AS 3798:2007), otherwise Class P conditions would be warranted in those fill areas. Some remnant tree roots may still be present within the natural profile, generally embedded within the weathered rock, at the existing ground surface or below any controlled fill.

Depending on the depth of site cut and trenches, rock excavation may be required.

Moisture condition of site soils and/or the presence of groundwater may vary considerably from time of investigation compared to at the time of construction. Groundwater seepages are highly likely after heavy or prolonged rain.

Drainage works to control groundwater seepages have been installed during the subdivision construction. The successful purchaser should seek advice from the developer before any construction works.

This report must be read in conjunction with the attached "Limitations" and notes "About this Report".

References:

AS 2870:2011, Residential Slabs and Footings, Standards Australia.

AS 3798:2007, Guidelines on Earthworks for Commercial and Residential Developments, Standards Australia.

Attachments:

Limitations & About this Report	Test Pit Log(s) Pit(s) 78,79
Explanatory Notes	Drawing 1 Rev1

A Hirsch

Written by: Alastair Hirsch Reviewed by: Michael Jones

Douglas PARTNERS GROUNDED EXPERTISE

Limitations:

Douglas Partners Pty Ltd (Douglas) has prepared this report for this project at Stage 7 Denman North Estate, Denman Prospect ACT in line with Douglas' proposal 88231.42.P.001.Rev1 dated 10 November 2022 and acceptance received from Capital Estate Developments Pty Ltd dated 10 November 2022. The work was carried out under Douglas' Engagement Terms. This report is provided for the exclusive use of Capital Estate Developments Pty Ltd for this project only and for the purposes as described in the report. It should not be used by or relied upon for other projects or purposes on the same or other site or by a third party. Any party so relying upon this report beyond its exclusive use and purpose as stated above, and without the express written consent of Douglas, does so entirely at its own risk and without recourse to Douglas for any loss or damage. In preparing this report Douglas has necessarily relied upon information provided by the client and/or their agents.

The results provided in the report are indicative of the sub-surface conditions on the site only at the specific sampling and/or testing locations, and then only to the depths investigated and at the time the work was carried out. Sub-surface conditions can change abruptly due to variable geological processes and also as a result of human influences. Such changes may occur after Douglas' field testing has been completed.

Douglas' advice is based upon the conditions encountered during this investigation. The accuracy of the advice provided by Douglas in this report may be affected by undetected variations in ground conditions across the site between and beyond the sampling and/or testing locations. The advice may also be limited by budget constraints imposed by others or by site accessibility.

The assessment of atypical safety hazards arising from this advice is restricted to the geotechnical components set out in this report and based on known project conditions and stated design advice and assumptions. While some recommendations for safe controls may be provided, detailed 'safety in design' assessment is outside the current scope of this report and requires additional project data and assessment.

The scope of work for this investigation/report did not include the assessment of surface or sub-surface materials or groundwater for contaminants, within or adjacent to the site. Should evidence of fill of unknown origin be noted in the report, and in particular the presence of building demolition materials, it should be recognised that there may be some risk that such fill may contain contaminants and hazardous building materials.

This report must be read in conjunction with all of the attached and should be kept in its entirety without separation of individual pages or sections. Douglas cannot be held responsible for interpretations or conclusions made by others unless they are supported by an expressed statement, interpretation, outcome or conclusion stated in this report.

This report, or sections from this report, should not be used as part of a specification for a project, without review and agreement by Douglas. This is because this report has been written as advice and opinion rather than instructions for construction.

About this Report

November 2023

Introduction

These notes have been provided to amplify DP's report in regard to classification methods, field procedures and the comments section. Not all are necessarily relevant to all reports.

DP's reports are based on information gained from limited subsurface excavations and sampling, supplemented by knowledge of local geology and experience. For this reason, they must be regarded as interpretive rather than factual documents, limited to some extent by the scope of information on which they rely.

Copyright

This report is the property of Douglas Partners Pty Ltd. The report may only be used for the purpose for which it was commissioned and in accordance with the Conditions of Engagement for the commission supplied at the time of proposal. Unauthorised use of this report in any form whatsoever is prohibited.

Borehole and Test Pit Logs

The borehole and test pit logs presented in this report are an engineering and/or geological interpretation of the subsurface conditions, and their reliability will depend to some extent on frequency of sampling and the method of drilling or excavation. Ideally, continuous undisturbed sampling or core drilling will provide the most reliable assessment, but this is not always practicable or possible to justify on economic grounds. In any case the boreholes and test pits represent only a very small sample of the total subsurface profile.

Interpretation of the information and its application to design and construction should therefore take into account the spacing of boreholes or pits, the frequency of sampling, and the possibility of other than 'straight line' variations between the test locations.

Groundwater

Where groundwater levels are measured in boreholes there are several potential problems, namely:

- In low permeability soils groundwater may enter the hole very slowly or perhaps not at all during the time the hole is left open;
- A localised, perched water table may lead to an erroneous indication of the true water table;
- Water table levels will vary from time to time with seasons or recent weather changes. They may not be the same at the time of construction as are indicated in the report; and
- The use of water or mud as a drilling fluid will mask any groundwater inflow. Water has to be blown out of the hole and drilling mud must first be washed out of the hole if water measurements are to be made.

More reliable measurements can be made by installing standpipes which are read at intervals over several days, or perhaps weeks for low permeability soils. Piezometers, sealed in a particular stratum, may be advisable in low permeability soils or where there may be interference from a perched water table.

Reports

The report has been prepared by qualified personnel, is based on the information obtained from field and laboratory testing, and has been undertaken to current engineering standards of interpretation and analysis. Where the report has been prepared for a specific design proposal, the information and interpretation may not be relevant if the design proposal is changed. If this happens, DP will be pleased to review the report and the sufficiency of the investigation work.

Every care is taken with the report as it relates to interpretation of subsurface conditions, discussion of geotechnical and environmental aspects, and recommendations or suggestions for design and construction. However, DP cannot always anticipate or assume responsibility for:

- Unexpected variations in ground conditions. The potential for this will depend partly on borehole or pit spacing and sampling frequency;
- Changes in policy or interpretations of policy by statutory authorities; or
- The actions of contractors responding to commercial pressures.

If these occur, DP will be pleased to assist with investigations or advice to resolve the matter.

continued next page

About this Report

Site Anomalies

In the event that conditions encountered on site during construction appear to vary from those which were expected from the information contained in the report, DP requests that it be immediately notified. Most problems are much more readily resolved when conditions are exposed rather than at some later stage, well after the event.

Information for Contractual Purposes

Where information obtained from this report is provided for tendering purposes, it is recommended that all information, including the written report and discussion, be made available. In circumstances where the discussion or comments section is not relevant to the contractual situation, it may be appropriate to prepare a specially edited document. DP would be pleased to assist in this regard and/or to make additional report copies available for contract purposes at a nominal charge.

Site Inspection

The company will always be pleased to provide engineering inspection services for geotechnical and environmental aspects of work to which this report is related. This could range from a site visit to confirm that conditions exposed are as expected, to full time engineering presence on site.

intentionally blank

intentionally blank

Terminology, Symbols and Abbreviations

November 2023

Introduction to Terminology, Symbols and Abbreviations

Douglas Partners' reports, investigation logs, and other correspondence may use terminology which has quantitative or qualitative connotations. To remove ambiguity or uncertainty surrounding the use of such terms, the following sets of notes pages may be attached Douglas Partners' reports, depending on the work performed and conditions encountered:

- Soil Descriptions;
- Rock Descriptions; and
- Sampling, insitu testing, and drilling methodologies

In addition to these pages, the following notes generally apply to most documents.

Abbreviation Codes

Site conditions may also be presented in a number of different formats, such as investigation logs, field mapping, or as a written summary. In some of these formats textual or symbolic terminology may be presented using textual abbreviation codes or graphic symbols, and, where commonly used, these are listed alongside the terminology definition. For ease of identification in these note pages, textual codes are presented in these notes in the following style XW. Code usage conforms with the following guidelines:

- Textual codes are case insensitive, although herein they are generally presented in upper case; and
- Textual codes are contextual (i.e. the same or similar combinations of characters may be used in different contexts with different meanings (for example `PL` is used for plastic limit in the context of soil moisture condition, as well as in `PL(A)` for point load test result in the testing results column)).

Data Integrity Codes

Subsurface investigation data recorded by Douglas Partners is generally managed in a highly structured database environment, where records "span" between a top and bottom depth interval. Depth interval "gaps" between records are considered to introduce ambiguity, and, where appropriate, our practice guidelines may require contiguous data sets. Recording meaningful data is not always appropriate (for example assigning a "strength" to a concrete pavement) and the following codes may be used to maintain contiguity in such circumstances.

Term	Description	Abbreviation Code
Core loss	No core recovery	KL
Unknown	Information was not available to allow classification of the property. For example, when auguring in loose, saturated sand auger cuttings may not be returned.	UK
No data	Information required to allow classification of the property was not available. For example if drilling is commenced from the base of a hole predrilled by others	ND
Not Applicable	Derivation of the properties not appropriate or beyond the scope of the investigation. For example providing a description of the strength of a concrete pavement	NA

Graphic Symbols

Douglas Partners' logs contain a "graphic" column which provides a pictorial representation of the basic composition of the material. The symbols used are directly representing the material name stated in the adjacent "Description of Strata" column, and as such no specific graphic symbology legend has been provided in these notes.

intentionally blank

Soil Descriptions

Introduction

All materials which are not considered to be "in-situ rock" are described in general accordance with the soil description model of AS 1726-2017 Part 6.1.3, and can be broken down into the following description structure:

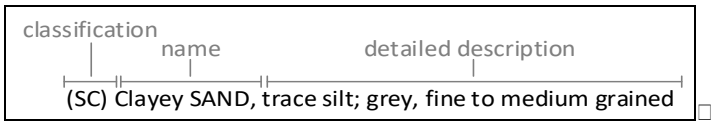

The "classification" comprises a two character "group symbol" providing a general summary of dominant soil characteristics. The "name" summarises the particle sizes within the soil which most influence its behaviour. The detailed description presents more information about composition, condition, structure, and origin of the soil.

Classification, naming and description of soils require the relative proportion of particles of different sizes within the whole soil mixture to be considered.

Particle size designation and Behaviour Model

Solid particles within a soil are differentiated on the basis of size.

The engineering behaviour properties of a soil can subsequently be modelled to be either "fine grained" (also known as "cohesive" behaviour) or "coarse grained" ("non cohesive" behaviour), depending on the relative proportion of fine or coarse fractions in the soil mixture.

Particle Size Designation	Particle Size (mm)	Behaviour Model	
		Behaviour	Approximate Dry Mass
Boulder	>200	Excluded from particle behaviour model as "oversize"	
Cobble	63 - 200		
Gravel[1]	2.36 - 63	Coarse	>65%
Sand[1]	0.075 - 2.36		
Silt	0.002 - 0.075	Fine	>35%
Clay	<0.002		

[1] – refer grain size subdivision descriptions below

The behaviour model boundaries defined above are not precise, and the material behaviour should be assumed from the name given to the material (which considers the particle fraction which dominates the behaviour, refer "component proportions" below), rather than strict observance of the proportions of particle sizes. For example, if a material is named a "Sandy CLAY", this is indicative that the material exhibits fine grained behaviour, even if the dry mass of coarse grained material may exceed 65%.

Component proportions

The relative proportion of the dry mass of each particle size fraction is assessed to be a "primary", "secondary", or "minor" component of the soil mixture, depending on its influence over the soil behaviour.

Component Proportion Designation	Definition[1]	Relative Proportion	
		In Fine Grained Soil	In Coarse Grained Soil
Primary	The component (particle size designation, refer above) which dominates the engineering behaviour of the soil	The clay/silt component with the greater proportion	The sand/gravel component with the greater proportion
Secondary	Any component which is not the primary, but is significant to the engineering properties of the soil	Any component with greater than 30% proportion	Any granular component with greater than 30%; or Any fine component with greater than 12%
Minor[2]	Present in the soil, but not significant to its engineering properties	All other components	All other components

[1] As defined in AS1726-2017 6.1.4.4

[2] In the detailed material description, minor components are split into two further sub-categories. Refer "identification of minor components" below.

Composite Materials

In certain situations, a lithology description may describe more than one material, for example, collectively describing a layer of interbedded sand and clay. In such a scenario, the two materials would be described independently, with the names preceded or followed by a statement describing the arrangement by which the materials co-exist. For example, "INTERBEDDED Silty CLAY AND SAND".

Soil Descriptions

Classification

The soil classification comprises a two character group symbol. The first character identifies the primary component. The second character identifies either the grading or presence of fines in a coarse grained soil, or the plasticity in a fine grained soil. Refer AS1726-2017 6.1.6 for further clarification.

Soil Name

For most soils, the name is derived with the primary component included as the noun (in upper case), preceded by any secondary components stated in an adjective form. In this way, the soil name also describes the general composition and indicates the dominant behaviour of the material.

Component [1]	Prominence in Soil Name
Primary	Noun (eg "CLAY")
Secondary	Adjective modifier (eg "Sandy")
Minor	No influence

[1] – for determination of component proportions, refer component proportions on previous page

For materials which cannot be disaggregated, or which are not comprised of rock or mineral fragments, the names "ORGANIC MATTER" or "ARTIFICIAL MATERIAL" may be used, in accordance with AS1726-2017 Table 14.

Commercial or colloquial names are not used for the soil name where a component derived name is possible (for example "Gravelly SAND" rather than "CRACKER DUST").

Materials of "fill" or "topsoil" origin are generally assigned a name derived from the primary/secondary component (where appropriate). In log descriptions this is preceded by uppercase "FILL" or "TOPSOIL". Origin uncertainty is indicated in the description by the characters (?), with the degree of uncertainty described (using the terms "probably" or "possibly" in the origin column, or at the end of the description).

Identification of minor components

Minor components are identified in the soil description immediately following the soil name. The minor component fraction is usually preceded with a term indicating the relative proportion of the component.

Minor Component Proportion Term	Relative Proportion	
	In Fine Grained Soil	In Coarse Grained Soil
With	All fractions: 15-30%	Clay/silt: 5-12% sand/gravel: 15-30%
Trace	All fractions: 0-15%	Clay/silt: 0-5% sand/gravel: 0-15%

The terms "with" and "trace" generally apply only to gravel or fine particle fractions. Where cobbles/boulders are encountered in minor proportions (generally less than about 12%) the term "occasional" may be used. This term describes the sporadic distribution of the material within the confines of the investigation excavation only, and there may be considerable variation in proportion over a wider area which is difficult to factually characterise due to the relative size of the particles and the investigation methods.

Soil Composition

Plasticity

Descriptive Term	Laboratory liquid limit range	
	Silt	Clay
Non-plastic materials	Not applicable	Not applicable
Low plasticity	≤50	≤35
Medium plasticity	Not applicable	>35 and ≤50
High plasticity	>50	>50

Note, Plasticity descriptions generally describe the plasticity behaviour of the whole of the fine grained soil, not individual fine grained fractions.

Grain Size

Type		Particle size (mm)
Gravel	Coarse	19 - 63
	Medium	6.7 - 19
	Fine	2.36 – 6.7
Sand	Coarse	0.6 - 2.36
	Medium	0.21 - 0.6
	Fine	0.075 - 0.21

Grading

Grading Term	Particle size (mm)
Well	A good representation of all particle sizes
Poorly	An excess or deficiency of particular sizes within the specified range
Uniformly	Essentially of one size
Gap	A deficiency of a particular size or size range within the total range

Note, AS1726-2017 provides terminology for additional attributes not listed here.

Soil Descriptions

Soil Condition

Moisture

The moisture condition of soils is assessed relative to the plastic limit for fine grained soils, while for coarse grained soils it is assessed based on the appearance and feel of the material. The moisture condition of a material is considered to be independent of stratigraphy (although commonly these are related), and this data is presented in its own column on logs.

Applicability	Term	Tactile Assessment	Abbreviation code
Fine	Dry of plastic limit	Hard and friable or powdery	w<PL
	Near plastic limit	Can be moulded	w=PL
	Wet of plastic limit	Water residue remains on hands when handling	w>PL
	Near liquid limit	"oozes" when agitated	w=LL
	Wet of liquid limit	"oozes"	w>LL
Coarse	Dry	Non-cohesive and free running	D
	Moist	Feels cool, darkened in colour, particles may stick together	M
	Wet	Feels cool, darkened in colour, particles may stick together, free water forms when handling	W

The abbreviation code NDF, meaning "not-assessable due to drilling fluid use" may also be used.

Note, observations relating to free ground water or drilling fluids are provided independent of soil moisture condition.

Consistency/Density/Compaction/Cementation/Extremely Weathered Material

These concepts give an indication of how the material may respond to applied forces (when considered in conjunction with other attributes of the soil). This behaviour can vary independent of the composition of the material, and on logs these are described in an independent column and are generally mutually exclusive (i.e it is inappropriate to describe both consistency and compaction at the same time). The method by which the behaviour is described depends on the behaviour model and other characteristics of the soil as follows:

- In fine grained soils, the "consistency" describes the ease with which the soil can be remoulded, and is generally correlated against the materials undrained shear strength;
- In granular materials, the relative density describes how tightly packed the particles are, and is generally correlated against the density index;
- In anthropogenically modified materials, the compaction of the material is described qualitatively;
- In cemented soils (both natural and anthropogenic), the cemented "strength" is described qualitatively, relative to the difficulty with which the material is disaggregated; and
- In soils of extremely weathered material origin, the engineering behaviour may be governed by relic rock features, and expected behaviour needs to be assessed based the overall material description.

Quantitative engineering performance of these materials may be determined by laboratory testing or estimated by correlated field tests (for example penetration or shear vane testing). In some cases, performance may be assessed by tactile or other subjective methods, in which case investigation logs will show the estimated value enclosed in round brackets, for example (VS).

Consistency (fine grained soils)

Consistency Term	Tactile Assessment	Undrained Shear Strength (kPa)	Abbreviation Code
Very soft	Extrudes between fingers when squeezed	<12	VS
Soft	Mouldable with light finger pressure	>12 - ≤25	S
Firm	Mouldable with strong finger pressure	>25 - ≤50	F
Stiff	Cannot be moulded by fingers	>50 - ≤100	St
Very stiff	Indented by thumbnail	>100 - ≤200	VSt
Hard	Indented by thumbnail with difficulty	>200	H
Friable	Easily crumbled or broken into small pieces by hand	-	Fr

Relative Density (coarse grained soils)

Relative Density Term	Density Index	Abbreviation Code
Very loose	<15	VL
Loose	>15 - ≤35	L
Medium dense	>35 - ≤65	MD
Dense	>65 - ≤85	D
Very dense	>85	VD

Note, tactile assessment of relative density is difficult, and generally requires penetration testing, hence a tactile assessment guide is not provided

Soil Descriptions

Compaction (anthropogenically modified soil)

Compaction Term	Abbreviation Code
Well compacted	WC
Poorly compacted	PC
Moderately compacted	MC
Variably compacted	VC

Cementation (natural and anthropogenic)

Cementation Term	Abbreviation Code
Moderately cemented	MOD
Weakly cemented	WEK

Extremely Weathered Material

AS1726-2017 considers weathered material to be soil if the unconfined compressive strength is less than 0.6 MPa (i.e. less than very low strength rock). These materials may be identified as "extremely weathered material" in reports and by the abbreviation code XWM on log sheets. This identification is not correlated to any specific qualitative or quantitative behaviour, and the engineering properties of this material must therefore be assessed according to engineering principles with reference to any relic rock structure, fabric, or texture described in the description.

Soil Origin

Term	Description	Abbreviation Code
Residual	Derived from in-situ weathering of the underlying rock	RS
Extremely weathered material	Formed from in-situ weathering of geological formations. Has strength of less than 'very low' as per as1726 but retains the structure or fabric of the parent rock.	XWM
Alluvial	Deposited by streams and rivers	ALV
Fluvial	Deposited by channel fill and overbank (natural levee, crevasse splay or flood basin)	FLV
Estuarine	Deposited in coastal estuaries	EST
Marine	Deposited in a marine environment	MAR
Lacustrine	Deposited in freshwater lakes	LAC
Aeolian	Carried and deposited by wind	AEO
Colluvial	Soil and rock debris transported down slopes by gravity	COL
Slopewash	Thin layers of soil and rock debris gradually and slowly deposited by gravity and possibly water	SW
Topsoil	Mantle of surface soil, often with high levels of organic material	TOP
Fill	Any material which has been moved by man	FILL
Littoral	Deposited on the lake or seashore	LIT
Unidentifiable	Not able to be identified	UID

Cobbles and Boulders

The presence of particles considered to be "oversize" may be described using one of the following strategies:

- Oversize encountered in a minor proportion (when considered relative to the wider area) are noted in the soil description; or
- Where a significant proportion of oversize is encountered, the cobbles/boulders are described independent of the soil description, in a similar manner to composite soils (described above) but qualified with "MIXTURE OF".

intentionally blank

Rock Strength

Rock strength is defined by the unconfined compressive strength, and it refers to the strength of the rock substance and not the strength of the overall rock mass, which may be considerably weaker due to defects.

The Point Load Strength Index $I_{s(50)}$ is commonly used to provide an estimate of the rock strength and site specific correlations should be developed to allow UCS values to be determined. The point load strength test procedure is described by Australian Standard AS4133.4.1-2007. The terms used to describe rock strength are as follows:

Strength Term	Unconfined Compressive Strength (MPa)	Point Load Index[1] $I_{s(50)}$ MPa	Abbreviation Code
Very low	0.6 - 2	0.03 - 0.1	VL
Low	2 - 6	0.1 - 0.3	L
Medium	6 - 20	0.3 - 1.0	M
High	20 - 60	1 - 3	H
Very high	60 - 200	3 - 10	VH
Extremely high	>200	>10	EH

[1] Rock strength classification is based on UCS. The UCS to $I_{s(50)}$ ratio varies significantly for different rock types and specific ratios may be required for each site. The point load Index ranges shown above are as suggested in AS1726 and should not be relied upon without supporting evidence.

The following abbreviation codes are used for soil layers or seams of material "within rock" but for which the equivalent UCS strength is less than 0.6 MPa.

Scenario	Abbreviation Code
The material encountered has an equivalent UCS strength of less than 0.6 MPa, and therefore is considered to be soil (as per Note 1 of Table 20 of AS 1726-2017). The properties of the material encountered over this interval are described in the "Description of Strata" and soil properties columns.	SOIL
The material encountered has an equivalent UCS strength of less than 0.6 MPa, and therefore is considered to be soil (as per Note 1 of Table 20 of AS 1726-2017). The prominence of the material is such that it can be considered to be a seam (as defined in Table 22 of AS1726-2017) and the properties of the material are described in the defect column.	SEAM

Degree of Weathering

The degree of weathering of rock is classified as follows:

Weathering Term	Description	Abbreviation Code
Residual Soil[1]	Material is weathered to such an extent that it has soil properties. Mass structure and material texture and fabric of original rock are no longer visible, but the soil has not been significantly transported.	RS
Extremely weathered[1]	Material is weathered to such an extent that it has soil properties. Mass structure and material texture and fabric of original rock are still visible	XW
Highly weathered	The whole of the rock material is discoloured, usually by iron staining or bleaching to the extent that the colour of the original rock is not recognisable. Rock strength is significantly changed by weathering. Some primary minerals have weathered to clay minerals. Porosity may be increased by leaching or may be decreased due to deposition of weathering products in pores.	HW
Moderately weathered	The whole of the rock material is discoloured, usually by iron staining or bleaching to the extent that the colour of the original rock is not recognisable but shows little or no change of strength from fresh rock.	MW
Slightly weathered	Rock is partially discoloured with staining or bleaching along joints but shows little or no change of strength from fresh rock.	SW
Fresh	No signs of decomposition or staining.	FR
Note: If HW and MW cannot be differentiated use DW (see below)		
Distinctly weathered	Rock strength usually changed by weathering. The rock may be highly discoloured, usually by iron staining. Porosity may be increased by leaching or may be decreased due to deposition of weathered products in pores.	DW

[1] The parent rock type, of which the residual/extremely weathered material is a derivative, will be stated in the description (where discernible).

Degree of Alteration

The degree of alteration of the rock material (physical or chemical changes caused by hot gasses or liquids at depth) is classified as follows:

Term	Description	Abbreviation Code
Extremely altered	Material is altered to such an extent that it has soil properties. Mass structure and material texture and fabric of original rock are still visible.	XA
Highly altered	The whole of the rock material is discoloured, usually by staining or bleaching to the extent that the colour of the original rock is not recognisable. Rock strength is changed by alteration. Some primary minerals are altered to clay minerals. Porosity may be increased by leaching or may be decreased due to precipitation of secondary materials in pores.	HA
Moderately altered	The whole of the rock material is discoloured, usually by staining or bleaching to the extent that the colour of the original rock is not recognisable but shows little or no change of strength from fresh rock.	MA
Slightly altered	Rock is slightly discoloured but shows little or no change of strength from fresh rock	SA
Note: If HA and MA cannot be differentiated use DA (see below)		
Distinctly altered	Rock strength usually changed by alteration. The rock may be highly discoloured, usually by staining or bleaching. Porosity may be increased by leaching or may be decreased due to precipitation of secondary minerals in pores.	DA

Degree of Fracturing

The following descriptive classification apply to the spacing of natural occurring fractures in the rock mass. It includes bedding plane partings, joints and other defects, but excludes drilling breaks. These terms are generally not required on investigation logs where fracture spacing is presented as a histogram, and where used are presented in an unabbreviated format.

Term	Description
Fragmented	Fragments of <20 mm
Highly Fractured	Core lengths of 20-40 mm with occasional fragments
Fractured	Core lengths of 30-100 mm with occasional shorter and longer sections
Slightly Fractured	Core lengths of 300 mm or longer with occasional sections of 100-300 mm
Unbroken	Core contains very few fractures

Rock Quality Designation

The quality of the cored rock can be measured using the Rock Quality Designation (RQD) index, defined as:

$$\text{RQD \%} = \frac{\text{cumulative length of 'sound' core sections} > \text{100 mm long}}{\text{total drilled length of section being assessed}}$$

where 'sound' rock is assessed to be rock of low strength or stronger. The RQD applies only to natural fractures. If the core is broken by drilling or handling (i.e., drilling breaks) then the broken pieces are fitted back together and are not included in the calculation of RQD.

Stratification Spacing

These terms may be used to describe the spacing of bedding partings in sedimentary rocks. Where used, these terms are generally presented in an unabbreviated format

Term	Separation of Stratification Planes
Thinly laminated	< 6 mm
Laminated	6 mm to 20 mm
Very thinly bedded	20 mm to 60 mm
Thinly bedded	60 mm to 0.2 m
Medium bedded	0.2 m to 0.6 m
Thickly bedded	0.6 m to 2 m
Very thickly bedded	> 2 m

Rock Descriptions

Defect Descriptions

Defect Type

Term	Abbreviation Code
Bedding plane	B
Cleavage	CL
Crushed seam	CS
Crushed zone	CZ
Drilling break	DB
Decomposed seam	DS
Drill lift	DL
Extremely Weathered seam	EW
Fault	F
Fracture	FC
Fragmented	FG
Handling break	HB
Infilled seam	IS
Joint	JT
Lamination	LAM
Shear seam	SS
Shear zone	SZ
Vein	VN
Mechanical break	MB
Parting	P
Sheared Surface	S

Rock Defect Orientation

Term	Abbreviation Code
Horizontal	H
Vertical	V
Sub-horizontal	SH
Sub-vertical	SV

Rock Defect Coating

Term	Abbreviation Code
Clean	CN
Coating	CT
Healed	HE
Infilled	INF
Stained	SN
Tight	TI
Veneer	VNR

Rock Defect Infill

Term	Abbreviation Code
Calcite	CA
Carbonaceous	CBS
Clay	CLAY
Iron oxide	FE
Manganese	MN
Pyrite	Py
Secondary material	MS
Silt	M
Quartz	Qz
Unidentified material	MU

Rock Defect Shape/Planarity

Term	Abbreviation Code
Curved	CU
Discontinuous	DIS
Irregular	IR
Planar	PR
Stepped	ST
Undulating	UN

Rock Defect Roughness

Term	Abbreviation Code
Polished	PO
Rough	RF
Smooth	SM
Slickensided	SL
Very rough	VR

Defect Orientation
The inclination of defects is always measured from the perpendicular to the core axis

intentionally blank

Sampling and Testing

A record of samples retained, and field testing performed is usually shown on a Douglas Partners' log with samples appearing to the left of a depth scale, and selected field and laboratory testing (including results, where relevant) appearing to the right of the scale, as illustrated below:

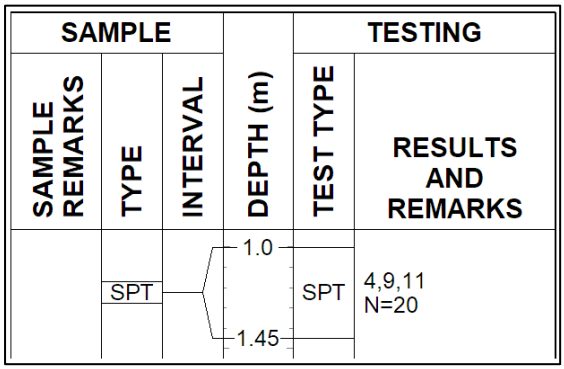

Sampling

The type or intended purpose for which a sample was taken is indicated by the following abbreviation codes.

Sample Type	Code
Auger sample	A
Acid Sulfate sample	ASS
Bulk sample	B
Core sample	C
Disturbed sample	D
Environmental sample	ES
Gas sample	G
Piston sample	P
Sample from SPT test	SPT
Undisturbed tube sample	U[1]
Water sample	W
Material Sample	MT
Core sample for unconfined compressive strength testing	UCS

[1] – numeric suffixes indicate tube diameter/width in mm

The above codes only indicate that a sample was retained, and not that testing was scheduled or performed.

Field and Laboratory Testing

A record that field and laboratory testing was performed is indicated by the following abbreviation codes.

Test Type	Code
Pocket penetrometer (kPa)	PP
Photo ionisation detector (ppm)	PID
Standard Penetration Test x/y = x blows for y mm penetration HB = hammer bouncing HW = fell under weight of hammer	SPT
Shear vane (kPa)	V
Unconfined compressive strength, (MPa)	UCS

Field and laboratory testing (continued)

Test Type	Code
Point load test, (MPa), axial (A), diametric (D), irregular (I)	PLT(_)
Dynamic cone penetrometer, followed by blow count penetration increment in mm (cone tip, generally in accordance with AS1289.6.3.2)	DCP/150
Perth sand penetrometer, followed by blow count penetration increment in mm (flat tip, generally in accordance with AS1289.6.3.3)	PSP/150

Groundwater Observations

▷	seepage/inflow
▽	standing or observed water level
NFGWO	no free groundwater observed
OBS	observations obscured by drilling fluids

Drilling or Excavation Methods/Tools

The drilling/excavation methods used to perform the investigation may be shown either in a dedicated column down the left-hand edge of the log, or stated in the log footer. In some circumstances abbreviation codes may be used.

Method	Abbreviation Code
Direct Push	DP
Solid flight auger. Suffixes: /T = tungsten carbide tip, /V = v-shaped tip	AD[1]
Air Track	AT
Diatube	DT[1]
Hand auger	HA[1]
Hand tools (unspecified)	HAND
Existing exposure	X
Hollow flight auger	HSA[1]
HQ coring	HQ3
HMLC series coring	HMLC
NMLC series coring	NMLC
NQ coring	NQ3
PQ coring	PQ3
Predrilled	PD
Push tube	PT[1]
Ripping tyne/ripper	R
Rock roller	RR[1]
Rock breaker/hydraulic hammer	EH
Sonic drilling	SON[1]
Mud/blade bucket	MB[1]
Toothed bucket	TB[1]
Vibrocore	VC[1]
Vacuum excavation	VE
Wash bore (unspecified bit type)	WB[1]

[1] – numeric suffixes indicate tool diameter/width in mm

FOUNDATION MAINTENANCE AND FOOTING PERFORMANCE

Understanding and preventing soil-related building movement

This Building Technology Resource is designed to identify causes of soil-related building movement, and to suggest methods of prevention of resultant cracking.

Buildings can and often do move. This movement can be up, down, lateral or rotational. The fundamental cause of movement in buildings can usually be related to one or more problems in the foundation soil. It is important for the home owner to identify the soil type in order to ascertain the measures that should be put in place in order to ensure that problems in the foundation soil can be prevented, thus protecting against building movement.

SOIL TYPES

The types of soils usually present under the topsoil in land zoned for residential buildings can be split into two approximate groups – granular and clay. Quite often, foundation soil is a mixture of both types. The general problems associated with soils having granular content are usually caused by erosion. Clay soils are subject to saturation and swell/shrink problems.

Classifications for a given area can generally be obtained by application to the local authority, but these are sometimes unreliable and if there is doubt, a geotechnical report should be commissioned. As most buildings suffering movement problems are founded on clay soils, there is an emphasis on classification of soils according to the amount of swell and shrinkage they experience with variations of water content. Table 1 below is a reproduction of Table 2.1 from Australian Standard AS 2870-2011, Residential slabs and footings.

CAUSES OF MOVEMENT

SETTLEMENT DUE TO CONSTRUCTION

There are two types of settlement that occur as a result of construction:

- Immediate settlement occurs when a building is first placed on its foundation soil, as a result of compaction of the soil under the weight of the structure. The cohesive quality of clay soil mitigates against this, but granular (particularly sandy) soil is susceptible.
- Consolidation settlement is a feature of clay soil and may take place because of the expulsion of moisture from the soil or because of the soil's lack of resistance to local compressive or shear stresses. This will usually take place during the first few months after construction but has been known to take many years in exceptional cases.

These problems may be the province of the builder and should be taken into consideration as part of the preparation of the site for construction.

EROSION

All soils are prone to erosion, but sandy soil is particularly susceptible to being washed away. Even clay with a sand component of say 10% or more can suffer from erosion.

SATURATION

This is particularly a problem in clay soils. Saturation creates a bog-like suspension of the soil that causes it to lose virtually all of its bearing capacity. To a lesser degree, sand is affected by saturation because saturated sand may undergo a reduction in volume, particularly imported sand fill for bedding and blinding layers. However, this usually occurs as immediate settlement and should normally be the province of the builder.

SEASONAL SWELLING AND SHRINKAGE OF SOIL

All clays react to the presence of water by slowly absorbing it, making the soil increase in volume (see table below, from AS 2870). The degree of increase varies considerably between different clays, as does the degree of decrease during the subsequent drying out caused by fair weather periods. Because of the low absorption and expulsion rate, this phenomenon will not usually be noticeable unless there are prolonged rainy or dry periods, usually of weeks or months, depending on the land and soil characteristics.

The swelling of soil creates an upward force on the footings of the building, and shrinkage creates subsidence that takes away the support needed by the footing to retain equilibrium.

SHEAR FAILURE

This phenomenon occurs when the foundation soil does not have sufficient strength to support the weight of the footing. There are two major post-construction causes:

- Significant load increase.
- Reduction of lateral support of the soil under the footing due to erosion or excavation.

In clay soil, shear failure can be caused by saturation of the soil adjacent to or under the footing.

TREE ROOT GROWTH

Trees and shrubs that are allowed to grow in the vicinity of footings can cause foundation soil movement in two ways:

- Roots that grow under footings may increase in cross-sectional size, exerting upward pressure on footings.

TABLE 1. GENERAL DEFINITIONS OF SITE CLASSES.

Class	Foundation
A	Most sand and rock sites with little or no ground movement from moisture changes
S	Slightly reactive clay sites, which may experience only slight ground movement from moisture changes
M	Moderately reactive clay or silt sites, which may experience moderate ground movement from moisture changes
H1	Highly reactive clay sites, which may experience high ground movement from moisture changes
H2	Highly reactive clay sites, which may experience very high ground movement from moisture changes
F	Extremely reactive sites, which may experience extreme ground movement from moisture changes

Source: Reproduced with the permission of Standards Australia Limited © 2011. Copyright in AS 2870-2011 Residential slabs and footings vests in Standards Australia Limited.

© CSIRO 2021

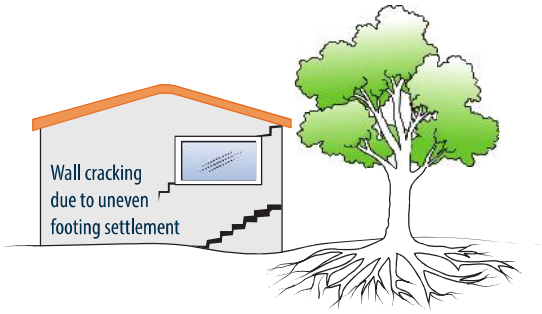

FIGURE 1 Trees can cause shrinkage and damage.

- Roots in the vicinity of footings will absorb much of the moisture in the foundation soil, causing shrinkage or subsidence.

UNEVENNESS OF MOVEMENT

The types of ground movement described above usually occur unevenly throughout the building's foundation soil. Settlement due to construction tends to be uneven because of:

- Differing compaction of foundation soil prior to construction.
- Differing moisture content of foundation soil prior to construction.

Movement due to non-construction causes is usually more uneven still. Erosion can undermine a footing that traverses the flow or can create the conditions for shear failure by eroding soil adjacent to a footing that runs in the same direction as the flow.

Saturation of clay foundation soil may occur where subfloor walls create a dam that makes water pond. It can also occur wherever there is a source of water near footings in clay soil. This leads to a severe reduction in the strength of the soil which may create local shear failure.

Seasonal swelling and shrinkage of clay soil affects the perimeter of the building first, then gradually spreads to the interior through absorption. The swelling process will usually begin at the uphill extreme of the building, or on the weather side where the land is flat. Shrinkage usually begins on the side of the building where the sun's heat is greatest.

EFFECTS OF UNEVEN SOIL MOVEMENT ON STRUCTURES

EROSION AND SATURATION

Erosion removes the support from under footings, tending to create subsidence of the part of the structure under which it occurs. Brickwork walls will resist the stress created by this removal of support by bridging the gap or cantilevering until the bricks or the mortar bedding fail. Older masonry has little resistance. Evidence of failure varies according to circumstances and symptoms may include:

- Step cracking in the mortar beds in the body of the wall or above/below openings such as doors or windows.
- Vertical cracking in the bricks (usually but not necessarily in line with the vertical beds or perpends).

Isolated piers affected by erosion or saturation of foundations will eventually lose contact with the bearers they support and may tilt or fall over. The floors that have lost this support will become bouncy, sometimes rattling ornaments etc.

SEASONAL SWELLING/SHRINKAGE IN CLAY

Swelling foundation soil due to rainy periods first lifts the most exposed extremities of the footing system, then the remainder of the perimeter footings while gradually permeating inside the building footprint to lift internal footings. This swelling first tends to create a dish effect, because the external footings are pushed higher than the internal ones.

The first noticeable symptom may be that the floor appears slightly dished. This is often accompanied by some doors binding on the floor or the door head, together with some cracking of cornice mitres. In buildings with timber flooring supported by bearers and joists, the floor can be bouncy. Externally there may be visible dishing of the hip or ridge lines.

As the moisture absorption process completes its journey to the innermost areas of the building, the internal footings will rise. If the spread of moisture is roughly even, it may be that the symptoms will temporarily disappear, but it is more likely that swelling will be uneven, creating a difference rather than a disappearance in symptoms. In buildings with timber flooring supported by bearers and joists, the isolated piers will rise more easily than the strip footings or piers under walls, creating noticeable doming of flooring.

As the weather pattern changes and the soil begins to dry out, the external footings will be first affected, beginning with the locations where the sun's effect is strongest. This has the effect of lowering the external footings. The doming is accentuated, and cracking reduces or disappears where it occurred because of dishing, but other cracks open up. The roof lines may become convex.

Doming and dishing are also affected by weather in other ways. In areas where warm, wet summers and cooler dry winters prevail, water migration tends to be toward the interior and doming will be accentuated, whereas where summers are dry, and winters are cold and wet, migration tends to be toward the exterior and the underlying propensity is toward dishing.

MOVEMENT CAUSED BY TREE ROOTS

In general, growing roots will exert an upward pressure on footings, whereas soil subject to drying because of tree or shrub roots will tend to remove support from under footings by inducing shrinkage.

COMPLICATIONS CAUSED BY THE STRUCTURE ITSELF

Most forces that the soil causes to be exerted on structures are vertical – i.e. either up or down. However, because these forces are seldom spread evenly around the footings, and because the building resists uneven movement because of its rigidity, forces are exerted from one part of the building to another. The net result of all these forces is usually rotational. This resultant force often complicates the diagnosis because the visible symptoms do not simply reflect the original cause. A common symptom is binding of doors on the vertical member of the frame.

EFFECTS ON FULL MASONRY STRUCTURES

Brickwork will resist cracking where it can. It will attempt to span areas that lose support because of subsided foundations or raised points. It is therefore usual to see cracking at weak points, such as openings for windows or doors.

In the event of construction settlement, cracking will usually remain unchanged after the process of settlement has ceased.

With local shear or erosion, cracking will usually continue to develop until the original cause has been remedied, or until the subsidence has completely neutralised the affected portion of footing and the structure has stabilised on other footings that remain effective.

In the case of swell/shrink effects, the brickwork will in some cases return to its original position after completion of a cycle, however it is more likely that the rotational effect will not be exactly reversed, and it is also usual that brickwork will settle in its new position and will resist the forces trying to return it to its original position. This means that in a case where swelling takes place after construction and cracking occurs, the cracking is likely to at least partly remain after the shrink segment of the cycle is complete. Thus, each time the cycle is repeated, the likelihood is that the cracking will become wider until the sections of brickwork become virtually independent.

With repeated cycles, once the cracking is established, if there is no other complication, it is normal for the incidence of cracking to stabilise, as the building has the articulation it needs to cope with the problem. This is by no means always the case, however, and monitoring of cracks in walls and floors should always be treated seriously.

Upheaval caused by growth of tree roots under footings is not a simple vertical shear stress. There is a tendency for the root to also

© CSIRO 2021

exert lateral forces that attempt to separate sections of brickwork after initial cracking has occurred.

The normal structural arrangement is that the inner leaf of brickwork in the external walls and at least some of the internal walls (depending on the roof type) comprise the load-bearing structure on which any upper floors, ceilings and the roof are supported. In these cases, it is internally visible cracking that should be the main focus of attention, however there are a few examples of dwellings whose external leaf of masonry plays some supporting role, so this should be checked if there is any doubt. In any case, externally visible cracking is important as a guide to stresses on the structure generally, and it should also be remembered that the external walls must be capable of supporting themselves.

EFFECTS ON FRAMED STRUCTURES

Timber or steel framed buildings are less likely to exhibit cracking due to swell/shrink than masonry buildings because of their flexibility. Also, the doming/dishing effects tend to be lower because of the lighter weight of walls. The main risks to framed buildings are encountered because of the isolated pier footings used under walls. Where erosion or saturation causes a footing to fall away, this can double the span which a wall must bridge. This additional stress can create cracking in wall linings, particularly where there is a weak point in the structure caused by a door or window opening. It is, however, unlikely that framed structures will be so stressed as to suffer serious damage without first exhibiting some or all of the above symptoms for a considerable period. The same warning period should apply in the case of upheaval. It should be noted, however, that where framed buildings are supported by strip footings there is only one leaf of brickwork and therefore the externally visible walls are the supporting structure for the building. In this case, the subfloor masonry walls can be expected to behave as full brickwork walls.

EFFECTS ON BRICK VENEER STRUCTURES

Because the load-bearing structure of a brick veneer building is the frame that makes up the interior leaf of the external walls plus perhaps the internal walls, depending on the type of roof, the building can be expected to behave as a framed structure, except that the external masonry will behave in a similar way to the external leaf of a full masonry structure.

WATER SERVICE AND DRAINAGE

Where a water service pipe, a sewer or stormwater drainage pipe is in the vicinity of a building, a water leak can cause erosion, swelling or saturation of susceptible soil. Even a minuscule leak can be enough to saturate a clay foundation. A leaking tap near a building can have the same effect. In addition, trenches containing pipes can become watercourses even though backfilled, particularly where broken rubble is used as fill. Water that runs along these trenches can be responsible for serious erosion, interstrata seepage into subfloor areas and saturation.

Pipe leakage and trench water flows also encourage tree and shrub roots to the source of water, complicating and exacerbating the problem. Poor roof plumbing can result in large volumes of rainwater being concentrated in a small area of soil:

- Incorrect falls in roof guttering may result in overflows, as may gutters blocked with leaves etc.
- Corroded guttering or downpipes can spill water to ground.
- Downpipes not positively connected to a proper stormwater collection system will direct a concentration of water to soil that is directly adjacent to footings, sometimes causing large-scale problems such as erosion, saturation and migration of water under the building.

SERIOUSNESS OF CRACKING

In general, most cracking found in masonry walls is a cosmetic nuisance only and can be kept in repair or even ignored. Table 2 below is a reproduction of Table C1 of AS 2870-2011.

AS 2870-2011 also publishes figures relating to cracking in concrete floors, however because wall cracking will usually reach the critical point significantly earlier than cracking in slabs, this table is not reproduced here.

PREVENTION AND CURE

PLUMBING

Where building movement is caused by water service, roof plumbing, sewer or stormwater failure, the remedy is to repair the problem. It is prudent, however, to consider also rerouting pipes away from the building where possible and relocating taps to positions where any leakage will not direct water to the building vicinity. Even where gully traps are present, there is sometimes sufficient spill to create erosion or saturation, particularly in modern installations using smaller diameter PVC fixtures. Indeed, some gully traps are not situated directly under the taps that are installed to charge them, with the result that water from the tap may enter the backfilled trench that houses the sewer piping. If the trench has been poorly backfilled, the water will either pond or flow along the bottom of the trench. As these trenches usually run alongside the footings and can be at a similar depth, it is not hard to see how any water that is thus directed into a trench can easily affect the foundation's ability to support footings or even gain entry to the subfloor area.

GROUND DRAINAGE

In all soils there is the capacity for water to travel on the surface and below it. Surface water flows can be established by inspection during and after heavy or prolonged rain. If necessary, a grated drain system connected to the stormwater collection system is usually an easy solution.

It is, however, sometimes necessary when attempting to prevent water migration that testing be carried out to establish watertable height and subsoil water flows. This subject may be regarded as an area for an expert consultant.

PROTECTION OF THE BUILDING PERIMETER

It is essential to remember that the soil that affects footings extends well beyond the actual building line. Watering of garden plants, shrubs and trees causes some of the most serious water problems.

For this reason, particularly where problems exist or are likely to occur, it is recommended that an apron of paving be installed around as much of the building perimeter as necessary. This paving should extend outwards a minimum of 900 mm (more in highly reactive soil) and should have a minimum fall away from the building of 1:60. The finished paving should be no less than 100 mm below brick vent bases.

It is prudent to relocate drainage pipes away from this paving, if possible, to avoid complications from future leakage. If this is not practical, earthenware pipes should be replaced by PVC and backfilling should be of the same soil type as the surrounding soil and compacted to the same density.

Except in areas where freezing of water is an issue, it is wise to remove taps in the building area and relocate them well away from the building – preferably not uphill.

It may be desirable to install a grated drain at the outside edge of the paving on the uphill side of the building. If subsoil drainage is needed this can be installed under the surface drain.

CONDENSATION

In buildings with a subfloor void, such as where bearers and joists support flooring, insufficient ventilation creates ideal conditions for condensation, particularly where there is little clearance between the floor and the ground. Condensation adds to the moisture already present in the subfloor and significantly slows the process of drying out. Installation of an adequate subfloor ventilation system, either natural or mechanical, is desirable.

© CSIRO 2021

TABLE 2. CLASSIFICATION OF DAMAGE WITH REFERENCE TO WALLS.

Description of typical damage and required repair	Approximate crack width limit	Damage category
Hairline cracks	<0.1 mm	0 – Negligible
Fine cracks which do not need repair	<1 mm	1 – Very Slight
Cracks noticeable but easily filled. Doors and windows stick slightly.	<5 mm	2 – Slight
Cracks can be repaired and possibly a small amount of wall will need to be replaced. Doors and windows stick. Service pipes can fracture. Weathertightness often impaired.	5–15 mm (or a number of cracks 3 mm or more in one group)	3 – Moderate
Extensive repair work involving breaking-out and replacing sections of walls, especially over doors and windows. Window and door frames distort. Walls lean or bulge noticeably, some loss of bearing in beams. Service pipes disrupted.	15–25 mm but also depends on number of cracks	4 – Severe

Source: Reproduced with the permission of Standards Australia Limited © 2011. Copyright in AS 2870-2011 Residential slabs and footings vests in Standards Australia Limited.

Warning: Although this Building Technology Resource deals with cracking in buildings, it should be said that subfloor moisture can result in the development of other problems, notably:

- Water that is transmitted into masonry, metal or timber building elements causes damage and/or decay to those elements.
- High subfloor humidity and moisture content create an ideal environment for various pests, including termites and spiders, and mould.
- Where high moisture levels are transmitted to the flooring and walls, an increase in the dust mite count can ensue within the living areas. Dust mites, as well as dampness in general, can be a health hazard to inhabitants, particularly those who are abnormally susceptible to respiratory ailments.

THE GARDEN

The ideal vegetation layout is to have lawn or plants that require only light watering immediately adjacent to the drainage or paving edge, then more demanding plants, shrubs and trees spread out in that order.

Overwatering due to misuse of automatic watering systems is a common cause of saturation and water migration under footings. If it is necessary to use these systems, it is important to remove garden beds to a completely safe distance from buildings.

EXISTING TREES

Where a tree is causing a problem of soil drying or there is the existence or threat of upheaval of footings, if the offending roots are subsidiary and their removal will not significantly damage the tree, they should be severed and a concrete or metal barrier placed vertically in the soil to prevent future root growth in the direction of the building. If it is not possible to remove the relevant roots without damage to the tree, an application to remove the tree should be made to the local authority. A prudent plan is to transplant likely offenders before they become a problem.

INFORMATION ON TREES, PLANTS AND SHRUBS

State departments overseeing agriculture can give information regarding root patterns, volume of water needed and safe distance from buildings of most species. Botanic gardens are also sources of information.

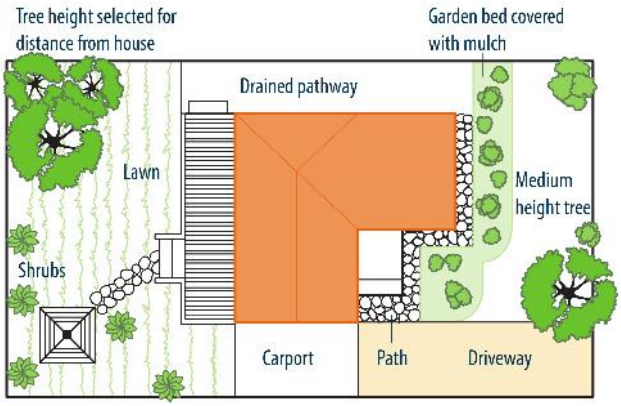

FIGURE 2 Gardens for a reactive site.

EXCAVATION

Excavation around footings must be properly engineered. Soil supporting footings can only be safely excavated at an angle that allows the soil under the footing to remain stable. This angle is called the angle of repose (or friction) and varies significantly between soil types and conditions. Removal of soil within the angle of repose will cause subsidence.

REMEDIATION

Where erosion has occurred that has washed away soil adjacent to footings, soil of the same classification should be introduced and compacted to the same density. Where footings have been undermined, augmentation or other specialist work may be required. Remediation of footings and foundations is generally the realm of a specialist consultant.

Where isolated footings rise and fall because of swell/shrink effect, the home owner may be tempted to alleviate floor bounce by filling the gap that has appeared between the bearer and the pier with blocking. The danger here is that when the next swell segment of the cycle occurs, the extra blocking will push the floor up into an accentuated dome and may also cause local shear failure in the soil. If it is necessary to use blocking, it should be by a pair of fine wedges and monitoring should be carried out fortnightly.

CSIROPUBLISHING

1300 788 000 | +61 3 9545 8400 | publishing.sales@csiro.au | www.publish.csiro.au
For information about CSIRO testing services visit www.csiro.au/en/work-with-us/services
ISBN 9781486312962 (print)/9781486312979 (digital) © CSIRO 2021
(replaces Building Technology File 18, 18-2011 and Information Sheet 10/91)
Unauthorised copying of this material is prohibited.

IMPORTANT DISCLAIMER: This information is prepared for Australia and general in nature. It may be incomplete or inapplicable in some cases.
Laws and regulations may vary in different places. Seek specialist advice for your particular circumstances.
To the extent permitted by law, CSIRO excludes all liability to any person for any loss, damage, cost or other consequence that may result from using this information.

© CSIRO 2021

TERMS AND CONDITIONS: BUILDING TECHNOLOGY RESOURCES

CONDITIONS OF USE

This publication may only be used in accordance with the following terms:

1. CSIRO (which for the purposes of these terms includes CSIRO Publishing) and its licensees own the copyright in the publication and will retain all rights, title and interest in and to the publication.
2. Once downloaded, the downloaded PDF publication may be provided by the user that initially downloads the PDF publication to other users by electronic mail once for each user licence purchased subject and pursuant to paragraph 4 below. The publication may not otherwise be copied or circulated electronically, including, for the avoidance of doubt, by electronic mail, even for internal use.
3. The downloaded publication may be printed, but the number of copies that may be printed is limited to the number of user licences purchased. That is, each user may print one (1) copy of the publication only.
4. The number of user licences purchased is shown on the tax invoice provided at the time of purchase. For the avoidance of doubt, the user that initially downloads the PDF publication shall be taken to be one (1) user. For example, if two (2) user licences are purchased, the publication may only be shared once to one (1) other user and printed once by each user (i.e. a maximum of two (2) hardcopy versions of the publication may be printed).
5. The publication (whether in PDF or printed format) may only be used for personal, internal, non-commercial purposes.
6. The publication and all its content is subject to copyright and unauthorised copying is prohibited.
7. Reproduction, renting, leasing, re-selling, sub-licensing, assignment or any supply of the publication, in print or electronically, is not permitted.
8. Retransmission, caching, networking or posting of the downloaded PDF publication is strictly prohibited.
9. Content may not be extracted for any reason and derivative works based on the publication are not permitted. The publication and any of its content may not be copied, reformatted, adapted, modified, translated, merged, reverse engineered, decompiled, dissembled or changed in any way and otherwise must not be used in a manner that would infringe the copyrights therein.
10. Ownership, copyright, trade mark, confidentiality or other marks or legends (including any digital watermark or similar) on or in the publication must not be removed, altered or obscured.
11. The security of the publication mut be protected at all times.
12. CSIRO will not provide any updating service for the publication. That is, purchasing the publication only entitles access to the publication as current at the date of purchase and does not entitle access to any amended, changed or updated version of the publication. CSIRO is not obliged to notify purchasers or users if the publication is amended, changed, updated or withdrawn after purchase.
13. If you purchased this publication via the CSIRO Publishing website, the PDF publication will remain available on the CSIRO Publishing website for 48 hours after purchasing. In the event of a communication problem during downloading, re-download the publication within 48 hours of purchase. After that time, the publication will no longer be accessible via the CSIRO Publishing website.
14. The right to use this publication pursuant to these terms will continue indefinitely, but will terminate automatically and without notice for any failure to comply with these terms. Upon termination all copies of the publication must be deleted and/or destroyed.
15. CSIRO nor any other person, to the extent permitted by law, has made or makes any representation or warranty of any kind in relation to the publication.
16. Without limiting the foregoing in any way, the information contained in the publication is general in nature. It may be incomplete or inapplicable in some cases. Laws and regulations may vary in different places. Seek specialist advice for your particular circumstances.
17. To the extent permitted by law, CSIRO excludes all liability to any person for any loss, damage, cost or other consequence that may result from using this publication and the information in it.
18. For reproduction of the publication or any portions or other use outside the circumstances set out in these terms, prior written permission of CSIRO must be sought. Please contact: publishing@csiro.au

TEST PIT LOG

CLIENT: Capital Estate Developments Pty Ltd
PROJECT: Proposed Residential Subdivision
LOCATION: Stage 7 Denman North Estate, Denman Prospect

SURFACE LEVEL: 583 AHD
COORDINATE: E:200937, N:602792
DATUM/GRID: ACT Stromlo
DIP/AZIMUTH: 90°/---°

LOCATION ID: 78
PROJECT No: 88231.60
DATE: 06/08/24
SHEET: 1 of 1

CONDITIONS ENCOUNTERED								SAMPLE				TESTING AND REMARKS	
GROUNDWATER	RL (m)	DEPTH (m)	DESCRIPTION OF STRATA	GRAPHIC	ORIGIN(#)	CONSIS.(*) DENSITY.(*)	MOISTURE	REMARKS	TYPE	INTERVAL	DEPTH (m)	TEST TYPE	RESULTS AND REMARKS
06/08/24 No free groundwater observed			TOPSOIL / Silty Sandy CLAY (CL): brown; low plasticity; fine to coarse sand. FILL.		TOP and FILL	NA	w<PL						
		0.20	FILL / Sandy Gravelly CLAY (CL), trace silt: brown; low plasticity; fine to coarse sand; fine to coarse gravel.		FILL	(VSt) to (H)	w<PL		D		0.50		
		0.80	FILL / Silty Sandy CLAY (CL), with gravel: brown; low plasticity; fine to coarse sand; fine to coarse gravel.		FILL	(VSt) to (H)	w<PL		D		1.00		
	582	1	Test Pit discontinued at 1.30m depth. Slow progress on hard gravelly fill.										

NOTES: (#) Soil origin is "probable" unless otherwise stated. (*) Consistency/Relative density shading is for visual reference only - no correlation between cohesive and granular materials is implied.

PLANT: CAT 306 CR mini excavator
OPERATOR: Bingley Electrical Pty Ltd
LOGGED: Miller
METHOD: 300mm wide bucket
REMARKS: Surface levels and coordinates are approximate only and must not be relied upon.

Refer to explanatory notes for symbol and abbreviation definitions

Douglas PARTNERS

Generated with CORE-GS by Geroc - Soil Log

TEST PIT LOG

CLIENT: Capital Estate Developments Pty Ltd
PROJECT: Proposed Residential Subdivision
LOCATION: Stage 7 Denman North Estate, Denman Prospect

SURFACE LEVEL: 585 AHD
COORDINATE: E:200921, N:602812
DATUM/GRID: ACT Stromlo
DIP/AZIMUTH: 90°/---°

LOCATION ID: 79
PROJECT No: 88231.60
DATE: 06/08/24
SHEET: 1 of 1

CONDITIONS ENCOUNTERED								SAMPLE				TESTING AND REMARKS	
GROUNDWATER	RL (m)	DEPTH (m)	DESCRIPTION OF STRATA	GRAPHIC	ORIGIN[#]	CONSIS.[*] DENSITY.[*]	MOISTURE	REMARKS	TYPE	INTERVAL	DEPTH (m)	TEST TYPE	RESULTS AND REMARKS
06/08/24 No free groundwater observed	584		FILL / Sandy Gravelly CLAY (CL), trace silt: brown; low plasticity; fine to coarse sand; fine to coarse gravel.		FILL	(VSt) to (H)	w<PL		D		0.50		
		0.60	FILL / Clayey Silty SAND (SC), with gravel: yellow brown; fine to coarse; fine to coarse gravel.		FILL	(D)	D		D		1.00		
	583												
			Test Pit discontinued at 1.60m depth. Limit of investigation.										

NOTES: [#] Soil origin is "probable" unless otherwise stated. [*] Consistency/Relative density shading is for visual reference only - no correlation between cohesive and granular materials is implied.

PLANT: CAT 306 CR mini excavator
OPERATOR: Bingley Electrical Pty Ltd
LOGGED: Miller
METHOD: 300mm wide bucket
REMARKS: Surface levels and coordinates are approximate only and must not be relied upon.

Refer to explanatory notes for symbol and abbreviation definitions

Douglas PARTNERS

Generated with CORE-GS by Geroc - Soil Log

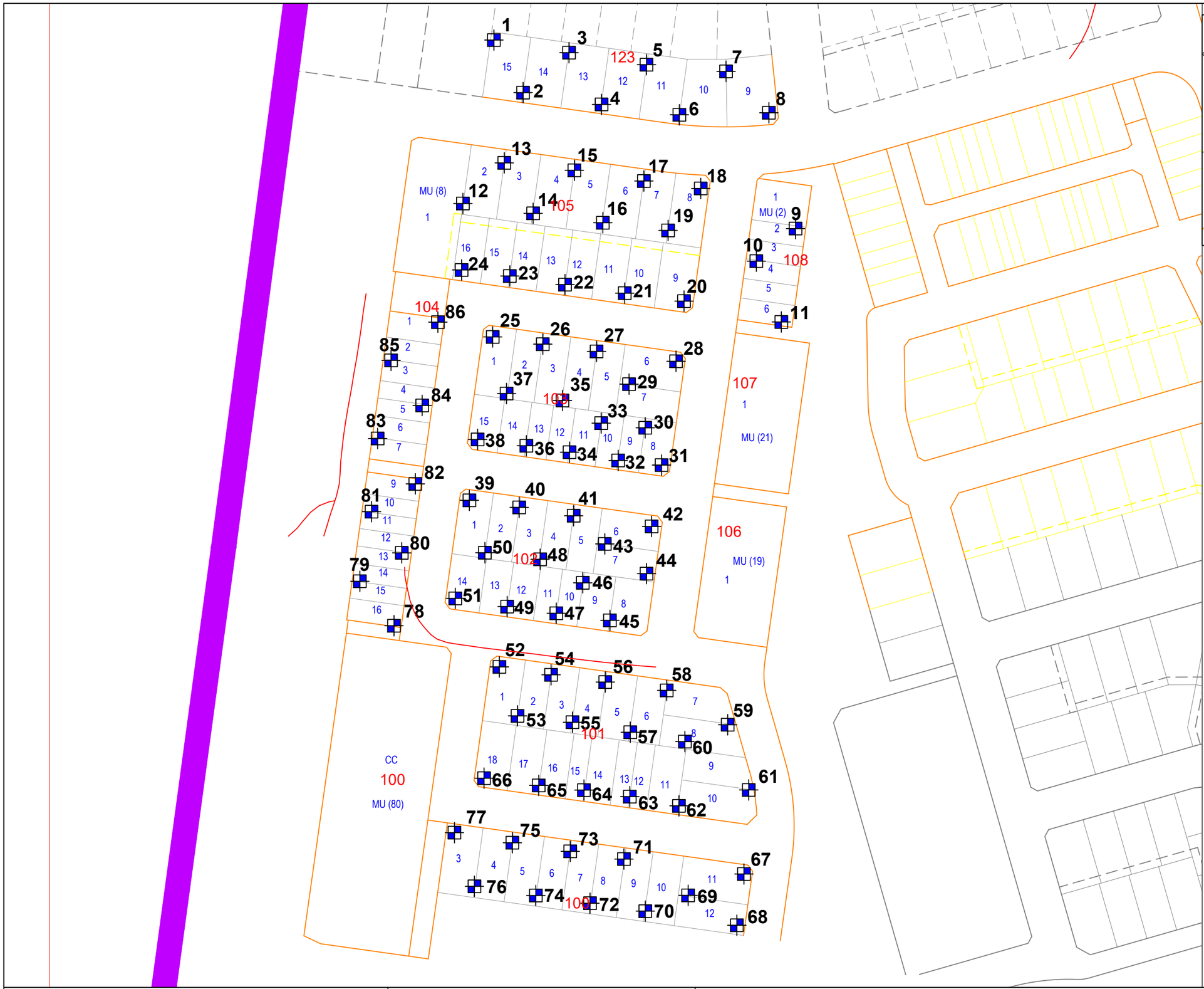

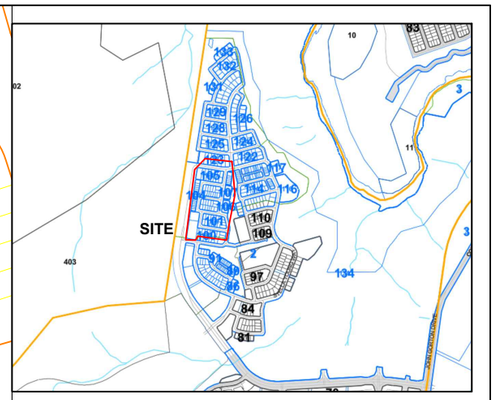

Locality Plan

LEGEND

Test Pit Location

Approximate Rubble Drain Alignment

0 17.5 35 52.5 70 87.5

1:1750 @ A3

NOTE: Base drawing from Huon (Drawing Depth Range Plot, dated 8 June 2023). Rubble Drain alignments from Capital Estate Developments Pty Ltd

Douglas PARTNERS

GROUNDED EXPERTISE

CLIENT: Capital Estate Developments Pty Ltd	TITLE: **Test Location Plan**	PROJECT No: 88231.60	
OFFICE: Canberra / DRAWN BY: FM	**Proposed Residential Subdivision**	DRAWING No: 1	
SCALE: As Shown / DATE: 29.09.25	**Stage 7 Denman Prospect, ACT**	REVISION: 1	

SITE CLASSIFICATION REPORT SUMMARY

BLOCK:	**16**	**SECTION:**	**104**	**SUBURB:**	**Denman Prospect**
JOB No:	**88231.60**			**DATE:**	**August 2024**
CLIENT:	**Capital Estate Developments Pty Ltd**			**REF:**	**R.072.Rev0**

Classification Procedures:

Existing Subsurface Conditions: Refer attached test pit log(s) – Pit(s) 78,79 and Drawing 1.

Bulk Earthworks: Based on Douglas Partners records, controlled fill was placed within the block under Level 1 control as defined in AS 3798:2007 during subdivision construction.

Laboratory Results: Previous laboratory testing results indicated liquid limit ranging from 25-80%, plasticity index ranging from 12-57% and linear shrinkage ranging from 6-20%.

Site Classification: Site classification in accordance with AS2870:2011 provides guidance on the patterns and magnitude of moisture related seasonal ground movements that must be considered in design. Based on the current soil profile / state, on limited subsurface information, soil reactivity and allowing for variation in the subsoil profile, the soil profile would be equivalent to Class M* (moderately reactive/filled) conditions. The site classification must be reassessed should the subsurface profile change by either cutting or filling and/or if the presence of service trenches, retaining walls or submerged structures are within the zone of influence of the proposed footings. Reference must be made to the comments provided below.

Footing Systems: Reference must be made to AS2870:2011 which indicates footing systems that are appropriate for each site classification. All footings must found within a uniform bearing stratum of suitable strength/material, below the zone of influence of any service trenches, backfill zones, retaining walls or underground structures. Masonry walls should be articulated in accordance with current best practice. Dwelling design must ensure suitable drainage and uniform moisture conditions are maintained in the vicinity of footings. Footing systems must be confirmed by a structural engineer taking into consideration any onsite or offsite constraints.

Maintenance Guidelines: Reference should be made to the attached CSIRO Sheet BTF 18 'Foundation Maintenance & Footing Performance' to comments about gardens, landscaping and trees on the performance of foundation soils and in particular in respect to maintaining good surface drainage. It notes that minor cracking in most structures is inevitable, and it describes site maintenance practices aimed at minimising foundation movements that can lead to cracking damage.

Comments/Limitations:

The successful purchaser must make their own interpretations, deductions and conclusions from the information made available and will need to accept full responsibility for such interpretations, deductions and conclusions. To that end development specific geotechnical investigations must be undertaken and it is recommended that footing excavations be inspected by a geotechnical engineer.

Some variability in subsurface conditions must be anticipated with the possibility additional topsoils / fill may have been spread subsequent to the investigation.

Site preparation prior to the construction should include removal of all vegetation, topsoil and any uncontrolled fill and all new fill must be placed under controlled conditions (AS 3798:2007), otherwise Class P conditions would be warranted in those fill areas. Some remnant tree roots may still be present within the natural profile, generally embedded within the weathered rock, at the existing ground surface or below any controlled fill.

Depending on the depth of site cut and trenches, rock excavation may be required.

Moisture condition of site soils and/or the presence of groundwater may vary considerably from time of investigation compared to at the time of construction. Groundwater seepages are highly likely after heavy or prolonged rain.

This report must be read in conjunction with the attached "Limitations" and notes "About this Report".

References:

AS 2870:2011, Residential Slabs and Footings, Standards Australia.

AS 3798:2007, Guidelines on Earthworks for Commercial and Residential Developments, Standards Australia.

Attachments:

Limitations & About this Report	Test Pit Log(s) Pit(s) 78,79
Explanatory Notes	Drawing 1

Written by: Alastair Hirsch Reviewed by: Michael Jones

Douglas PARTNERS | GROUNDED EXPERTISE

Limitations:

Douglas Partners Pty Ltd (Douglas) has prepared this report for this project at Stage 7 Denman North Estate, Denman Prospect ACT in line with Douglas' proposal 88231.42.P.001.Rev1 dated 10 November 2022 and acceptance received from Capital Estate Developments Pty Ltd dated 10 November 2022. The work was carried out under Douglas' Engagement Terms. This report is provided for the exclusive use of Capital Estate Developments Pty Ltd for this project only and for the purposes as described in the report. It should not be used by or relied upon for other projects or purposes on the same or other site or by a third party. Any party so relying upon this report beyond its exclusive use and purpose as stated above, and without the express written consent of Douglas, does so entirely at its own risk and without recourse to Douglas for any loss or damage. In preparing this report Douglas has necessarily relied upon information provided by the client and/or their agents.

The results provided in the report are indicative of the sub-surface conditions on the site only at the specific sampling and/or testing locations, and then only to the depths investigated and at the time the work was carried out. Sub-surface conditions can change abruptly due to variable geological processes and also as a result of human influences. Such changes may occur after Douglas' field testing has been completed.

Douglas' advice is based upon the conditions encountered during this investigation. The accuracy of the advice provided by Douglas in this report may be affected by undetected variations in ground conditions across the site between and beyond the sampling and/or testing locations. The advice may also be limited by budget constraints imposed by others or by site accessibility.

The assessment of atypical safety hazards arising from this advice is restricted to the geotechnical components set out in this report and based on known project conditions and stated design advice and assumptions. While some recommendations for safe controls may be provided, detailed 'safety in design' assessment is outside the current scope of this report and requires additional project data and assessment.

The scope of work for this investigation/report did not include the assessment of surface or sub-surface materials or groundwater for contaminants, within or adjacent to the site. Should evidence of fill of unknown origin be noted in the report, and in particular the presence of building demolition materials, it should be recognised that there may be some risk that such fill may contain contaminants and hazardous building materials.

This report must be read in conjunction with all of the attached and should be kept in its entirety without separation of individual pages or sections. Douglas cannot be held responsible for interpretations or conclusions made by others unless they are supported by an expressed statement, interpretation, outcome or conclusion stated in this report.

This report, or sections from this report, should not be used as part of a specification for a project, without review and agreement by Douglas. This is because this report has been written as advice and opinion rather than instructions for construction.

About this Report

November 2023

Introduction

These notes have been provided to amplify DP's report in regard to classification methods, field procedures and the comments section. Not all are necessarily relevant to all reports.

DP's reports are based on information gained from limited subsurface excavations and sampling, supplemented by knowledge of local geology and experience. For this reason, they must be regarded as interpretive rather than factual documents, limited to some extent by the scope of information on which they rely.

Copyright

This report is the property of Douglas Partners Pty Ltd. The report may only be used for the purpose for which it was commissioned and in accordance with the Conditions of Engagement for the commission supplied at the time of proposal. Unauthorised use of this report in any form whatsoever is prohibited.

Borehole and Test Pit Logs

The borehole and test pit logs presented in this report are an engineering and/or geological interpretation of the subsurface conditions, and their reliability will depend to some extent on frequency of sampling and the method of drilling or excavation. Ideally, continuous undisturbed sampling or core drilling will provide the most reliable assessment, but this is not always practicable or possible to justify on economic grounds. In any case the boreholes and test pits represent only a very small sample of the total subsurface profile.

Interpretation of the information and its application to design and construction should therefore take into account the spacing of boreholes or pits, the frequency of sampling, and the possibility of other than 'straight line' variations between the test locations.

Groundwater

Where groundwater levels are measured in boreholes there are several potential problems, namely:

- In low permeability soils groundwater may enter the hole very slowly or perhaps not at all during the time the hole is left open;
- A localised, perched water table may lead to an erroneous indication of the true water table;
- Water table levels will vary from time to time with seasons or recent weather changes. They may not be the same at the time of construction as are indicated in the report; and
- The use of water or mud as a drilling fluid will mask any groundwater inflow. Water has to be blown out of the hole and drilling mud must first be washed out of the hole if water measurements are to be made.

More reliable measurements can be made by installing standpipes which are read at intervals over several days, or perhaps weeks for low permeability soils. Piezometers, sealed in a particular stratum, may be advisable in low permeability soils or where there may be interference from a perched water table.

Reports

The report has been prepared by qualified personnel, is based on the information obtained from field and laboratory testing, and has been undertaken to current engineering standards of interpretation and analysis. Where the report has been prepared for a specific design proposal, the information and interpretation may not be relevant if the design proposal is changed. If this happens, DP will be pleased to review the report and the sufficiency of the investigation work.

Every care is taken with the report as it relates to interpretation of subsurface conditions, discussion of geotechnical and environmental aspects, and recommendations or suggestions for design and construction. However, DP cannot always anticipate or assume responsibility for:

- Unexpected variations in ground conditions. The potential for this will depend partly on borehole or pit spacing and sampling frequency;
- Changes in policy or interpretations of policy by statutory authorities; or
- The actions of contractors responding to commercial pressures.

If these occur, DP will be pleased to assist with investigations or advice to resolve the matter.

continued next page

About this Report

Site Anomalies

In the event that conditions encountered on site during construction appear to vary from those which were expected from the information contained in the report, DP requests that it be immediately notified. Most problems are much more readily resolved when conditions are exposed rather than at some later stage, well after the event.

Information for Contractual Purposes

Where information obtained from this report is provided for tendering purposes, it is recommended that all information, including the written report and discussion, be made available. In circumstances where the discussion or comments section is not relevant to the contractual situation, it may be appropriate to prepare a specially edited document. DP would be pleased to assist in this regard and/or to make additional report copies available for contract purposes at a nominal charge.

Site Inspection

The company will always be pleased to provide engineering inspection services for geotechnical and environmental aspects of work to which this report is related. This could range from a site visit to confirm that conditions exposed are as expected, to full time engineering presence on site.

intentionally blank

intentionally blank

Terminology, Symbols and Abbreviations

November 2023

Introduction to Terminology, Symbols and Abbreviations

Douglas Partners' reports, investigation logs, and other correspondence may use terminology which has quantitative or qualitative connotations. To remove ambiguity or uncertainty surrounding the use of such terms, the following sets of notes pages may be attached Douglas Partners' reports, depending on the work performed and conditions encountered:

- Soil Descriptions;
- Rock Descriptions; and
- Sampling, insitu testing, and drilling methodologies

In addition to these pages, the following notes generally apply to most documents.

Abbreviation Codes

Site conditions may also be presented in a number of different formats, such as investigation logs, field mapping, or as a written summary. In some of these formats textual or symbolic terminology may be presented using textual abbreviation codes or graphic symbols, and, where commonly used, these are listed alongside the terminology definition. For ease of identification in these note pages, textual codes are presented in these notes in the following style XW. Code usage conforms with the following guidelines:

- Textual codes are case insensitive, although herein they are generally presented in upper case; and
- Textual codes are contextual (i.e. the same or similar combinations of characters may be used in different contexts with different meanings (for example `PL` is used for plastic limit in the context of soil moisture condition, as well as in `PL(A)` for point load test result in the testing results column)).

Data Integrity Codes

Subsurface investigation data recorded by Douglas Partners is generally managed in a highly structured database environment, where records "span" between a top and bottom depth interval. Depth interval "gaps" between records are considered to introduce ambiguity, and, where appropriate, our practice guidelines may require contiguous data sets. Recording meaningful data is not always appropriate (for example assigning a "strength" to a concrete pavement) and the following codes may be used to maintain contiguity in such circumstances.

Term	Description	Abbreviation Code
Core loss	No core recovery	KL
Unknown	Information was not available to allow classification of the property. For example, when auguring in loose, saturated sand auger cuttings may not be returned.	UK
No data	Information required to allow classification of the property was not available. For example if drilling is commenced from the base of a hole predrilled by others	ND
Not Applicable	Derivation of the properties not appropriate or beyond the scope of the investigation. For example providing a description of the strength of a concrete pavement	NA

Graphic Symbols

Douglas Partners' logs contain a "graphic" column which provides a pictorial representation of the basic composition of the material. The symbols used are directly representing the material name stated in the adjacent "Description of Strata" column, and as such no specific graphic symbology legend has been provided in these notes.

intentionally blank

Soil Descriptions

Introduction

All materials which are not considered to be "in-situ rock" are described in general accordance with the soil description model of AS 1726-2017 Part 6.1.3, and can be broken down into the following description structure:

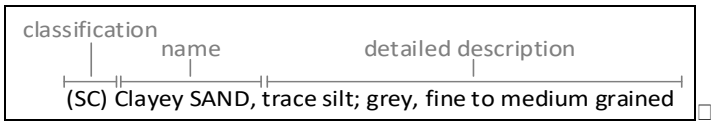

The "classification" comprises a two character "group symbol" providing a general summary of dominant soil characteristics. The "name" summarises the particle sizes within the soil which most influence its behaviour. The detailed description presents more information about composition, condition, structure, and origin of the soil.

Classification, naming and description of soils require the relative proportion of particles of different sizes within the whole soil mixture to be considered.

Particle size designation and Behaviour Model

Solid particles within a soil are differentiated on the basis of size.

The engineering behaviour properties of a soil can subsequently be modelled to be either "fine grained" (also known as "cohesive" behaviour) or "coarse grained" ("non cohesive" behaviour), depending on the relative proportion of fine or coarse fractions in the soil mixture.

Particle Size Designation	Particle Size (mm)	Behaviour Model	
		Behaviour	Approximate Dry Mass
Boulder	>200	Excluded from particle behaviour model as "oversize"	
Cobble	63 - 200		
Gravel[1]	2.36 - 63	Coarse	>65%
Sand[1]	0.075 - 2.36		
Silt	0.002 - 0.075	Fine	>35%
Clay	<0.002		

[1] – refer grain size subdivision descriptions below

The behaviour model boundaries defined above are not precise, and the material behaviour should be assumed from the name given to the material (which considers the particle fraction which dominates the behaviour, refer "component proportions" below), rather than strict observance of the proportions of particle sizes. For example, if a material is named a "Sandy CLAY", this is indicative that the material exhibits fine grained behaviour, even if the dry mass of coarse grained material may exceed 65%.

Component proportions

The relative proportion of the dry mass of each particle size fraction is assessed to be a "primary", "secondary", or "minor" component of the soil mixture, depending on its influence over the soil behaviour.

Component Proportion Designation	Definition[1]	Relative Proportion	
		In Fine Grained Soil	In Coarse Grained Soil
Primary	The component (particle size designation, refer above) which dominates the engineering behaviour of the soil	The clay/silt component with the greater proportion	The sand/gravel component with the greater proportion
Secondary	Any component which is not the primary, but is significant to the engineering properties of the soil	Any component with greater than 30% proportion	Any granular component with greater than 30%; or Any fine component with greater than 12%
Minor[2]	Present in the soil, but not significant to its engineering properties	All other components	All other components

[1] As defined in AS1726-2017 6.1.4.4

[2] In the detailed material description, minor components are split into two further sub-categories. Refer "identification of minor components" below.

Composite Materials

In certain situations, a lithology description may describe more than one material, for example, collectively describing a layer of interbedded sand and clay. In such a scenario, the two materials would be described independently, with the names preceded or followed by a statement describing the arrangement by which the materials co-exist. For example, "INTERBEDDED Silty CLAY AND SAND".

Soil Descriptions

Classification

The soil classification comprises a two character group symbol. The first character identifies the primary component. The second character identifies either the grading or presence of fines in a coarse grained soil, or the plasticity in a fine grained soil. Refer AS1726-2017 6.1.6 for further clarification.

Soil Name

For most soils, the name is derived with the primary component included as the noun (in upper case), preceded by any secondary components stated in an adjective form. In this way, the soil name also describes the general composition and indicates the dominant behaviour of the material.

Component [1]	Prominence in Soil Name
Primary	Noun (eg "CLAY")
Secondary	Adjective modifier (eg "Sandy")
Minor	No influence

[1] – for determination of component proportions, refer component proportions on previous page

For materials which cannot be disaggregated, or which are not comprised of rock or mineral fragments, the names "ORGANIC MATTER" or "ARTIFICIAL MATERIAL" may be used, in accordance with AS1726-2017 Table 14.

Commercial or colloquial names are not used for the soil name where a component derived name is possible (for example "Gravelly SAND" rather than "CRACKER DUST").

Materials of "fill" or "topsoil" origin are generally assigned a name derived from the primary/secondary component (where appropriate). In log descriptions this is preceded by uppercase "FILL" or "TOPSOIL". Origin uncertainty is indicated in the description by the characters (?), with the degree of uncertainty described (using the terms "probably" or "possibly" in the origin column, or at the end of the description).

Identification of minor components

Minor components are identified in the soil description immediately following the soil name. The minor component fraction is usually preceded with a term indicating the relative proportion of the component.

Minor Component Proportion Term	Relative Proportion	
	In Fine Grained Soil	In Coarse Grained Soil
With	All fractions: 15-30%	Clay/silt: 5-12% sand/gravel: 15-30%
Trace	All fractions: 0-15%	Clay/silt: 0-5% sand/gravel: 0-15%

The terms "with" and "trace" generally apply only to gravel or fine particle fractions. Where cobbles/boulders are encountered in minor proportions (generally less than about 12%) the term "occasional" may be used. This term describes the sporadic distribution of the material within the confines of the investigation excavation only, and there may be considerable variation in proportion over a wider area which is difficult to factually characterise due to the relative size of the particles and the investigation methods.

Soil Composition

Plasticity

Descriptive Term	Laboratory liquid limit range	
	Silt	Clay
Non-plastic materials	Not applicable	Not applicable
Low plasticity	≤50	≤35
Medium plasticity	Not applicable	>35 and ≤50
High plasticity	>50	>50

Note, Plasticity descriptions generally describe the plasticity behaviour of the whole of the fine grained soil, not individual fine grained fractions.

Grain Size

Type		Particle size (mm)
Gravel	Coarse	19 - 63
	Medium	6.7 - 19
	Fine	2.36 – 6.7
Sand	Coarse	0.6 - 2.36
	Medium	0.21 - 0.6
	Fine	0.075 - 0.21

Grading

Grading Term	Particle size (mm)
Well	A good representation of all particle sizes
Poorly	An excess or deficiency of particular sizes within the specified range
Uniformly	Essentially of one size
Gap	A deficiency of a particular size or size range within the total range

Note, AS1726-2017 provides terminology for additional attributes not listed here.

Soil Descriptions

Soil Condition

Moisture

The moisture condition of soils is assessed relative to the plastic limit for fine grained soils, while for coarse grained soils it is assessed based on the appearance and feel of the material. The moisture condition of a material is considered to be independent of stratigraphy (although commonly these are related), and this data is presented in its own column on logs.

Applicability	Term	Tactile Assessment	Abbreviation code
Fine	Dry of plastic limit	Hard and friable or powdery	w<PL
	Near plastic limit	Can be moulded	w=PL
	Wet of plastic limit	Water residue remains on hands when handling	w>PL
	Near liquid limit	"oozes" when agitated	w=LL
	Wet of liquid limit	"oozes"	w>LL
Coarse	Dry	Non-cohesive and free running	D
	Moist	Feels cool, darkened in colour, particles may stick together	M
	Wet	Feels cool, darkened in colour, particles may stick together, free water forms when handling	W

The abbreviation code NDF, meaning "not-assessable due to drilling fluid use" may also be used.

Note, observations relating to free ground water or drilling fluids are provided independent of soil moisture condition.

Consistency/Density/Compaction/Cementation/Extremely Weathered Material

These concepts give an indication of how the material may respond to applied forces (when considered in conjunction with other attributes of the soil). This behaviour can vary independent of the composition of the material, and on logs these are described in an independent column and are generally mutually exclusive (i.e it is inappropriate to describe both consistency and compaction at the same time). The method by which the behaviour is described depends on the behaviour model and other characteristics of the soil as follows:

- In fine grained soils, the "consistency" describes the ease with which the soil can be remoulded, and is generally correlated against the materials undrained shear strength;
- In granular materials, the relative density describes how tightly packed the particles are, and is generally correlated against the density index;
- In anthropogenically modified materials, the compaction of the material is described qualitatively;
- In cemented soils (both natural and anthropogenic), the cemented "strength" is described qualitatively, relative to the difficulty with which the material is disaggregated; and
- In soils of extremely weathered material origin, the engineering behaviour may be governed by relic rock features, and expected behaviour needs to be assessed based the overall material description.

Quantitative engineering performance of these materials may be determined by laboratory testing or estimated by correlated field tests (for example penetration or shear vane testing). In some cases, performance may be assessed by tactile or other subjective methods, in which case investigation logs will show the estimated value enclosed in round brackets, for example (VS).

Consistency (fine grained soils)

Consistency Term	Tactile Assessment	Undrained Shear Strength (kPa)	Abbreviation Code
Very soft	Extrudes between fingers when squeezed	<12	VS
Soft	Mouldable with light finger pressure	>12 - ≤25	S
Firm	Mouldable with strong finger pressure	>25 - ≤50	F
Stiff	Cannot be moulded by fingers	>50 - ≤100	St
Very stiff	Indented by thumbnail	>100 - ≤200	VSt
Hard	Indented by thumbnail with difficulty	>200	H
Friable	Easily crumbled or broken into small pieces by hand	-	Fr

Relative Density (coarse grained soils)

Relative Density Term	Density Index	Abbreviation Code
Very loose	<15	VL
Loose	>15 - ≤35	L
Medium dense	>35 - ≤65	MD
Dense	>65 - ≤85	D
Very dense	>85	VD

Note, tactile assessment of relative density is difficult, and generally requires penetration testing, hence a tactile assessment guide is not provided

Soil Descriptions

Compaction (anthropogenically modified soil)

Compaction Term	Abbreviation Code
Well compacted	WC
Poorly compacted	PC
Moderately compacted	MC
Variably compacted	VC

Cementation (natural and anthropogenic)

Cementation Term	Abbreviation Code
Moderately cemented	MOD
Weakly cemented	WEK

Extremely Weathered Material

AS1726-2017 considers weathered material to be soil if the unconfined compressive strength is less than 0.6 MPa (i.e. less than very low strength rock). These materials may be identified as "extremely weathered material" in reports and by the abbreviation code XWM on log sheets. This identification is not correlated to any specific qualitative or quantitative behaviour, and the engineering properties of this material must therefore be assessed according to engineering principles with reference to any relic rock structure, fabric, or texture described in the description.

Soil Origin

Term	Description	Abbreviation Code
Residual	Derived from in-situ weathering of the underlying rock	RS
Extremely weathered material	Formed from in-situ weathering of geological formations. Has strength of less than 'very low' as per as1726 but retains the structure or fabric of the parent rock.	XWM
Alluvial	Deposited by streams and rivers	ALV
Fluvial	Deposited by channel fill and overbank (natural levee, crevasse splay or flood basin)	FLV
Estuarine	Deposited in coastal estuaries	EST
Marine	Deposited in a marine environment	MAR
Lacustrine	Deposited in freshwater lakes	LAC
Aeolian	Carried and deposited by wind	AEO
Colluvial	Soil and rock debris transported down slopes by gravity	COL
Slopewash	Thin layers of soil and rock debris gradually and slowly deposited by gravity and possibly water	SW
Topsoil	Mantle of surface soil, often with high levels of organic material	TOP
Fill	Any material which has been moved by man	FILL
Littoral	Deposited on the lake or seashore	LIT
Unidentifiable	Not able to be identified	UID

Cobbles and Boulders

The presence of particles considered to be "oversize" may be described using one of the following strategies:

- Oversize encountered in a minor proportion (when considered relative to the wider area) are noted in the soil description; or
- Where a significant proportion of oversize is encountered, the cobbles/boulders are described independent of the soil description, in a similar manner to composite soils (described above) but qualified with "MIXTURE OF".

intentionally blank

Rock Strength

Rock strength is defined by the unconfined compressive strength, and it refers to the strength of the rock substance and not the strength of the overall rock mass, which may be considerably weaker due to defects.

The Point Load Strength Index $I_{s(50)}$ is commonly used to provide an estimate of the rock strength and site specific correlations should be developed to allow UCS values to be determined. The point load strength test procedure is described by Australian Standard AS4133.4.1-2007. The terms used to describe rock strength are as follows:

Strength Term	Unconfined Compressive Strength (MPa)	Point Load Index[1] $I_{s(50)}$ MPa	Abbreviation Code
Very low	0.6 - 2	0.03 - 0.1	VL
Low	2 - 6	0.1 - 0.3	L
Medium	6 - 20	0.3 - 1.0	M
High	20 - 60	1 - 3	H
Very high	60 - 200	3 - 10	VH
Extremely high	>200	>10	EH

[1] Rock strength classification is based on UCS. The UCS to $I_{s(50)}$ ratio varies significantly for different rock types and specific ratios may be required for each site. The point load Index ranges shown above are as suggested in AS1726 and should not be relied upon without supporting evidence.

The following abbreviation codes are used for soil layers or seams of material "within rock" but for which the equivalent UCS strength is less than 0.6 MPa.

Scenario	Abbreviation Code
The material encountered has an equivalent UCS strength of less than 0.6 MPa, and therefore is considered to be soil (as per Note 1 of Table 20 of AS 1726-2017). The properties of the material encountered over this interval are described in the "Description of Strata" and soil properties columns.	SOIL
The material encountered has an equivalent UCS strength of less than 0.6 MPa, and therefore is considered to be soil (as per Note 1 of Table 20 of AS 1726-2017). The prominence of the material is such that it can be considered to be a seam (as defined in Table 22 of AS1726-2017) and the properties of the material are described in the defect column.	SEAM

Degree of Weathering

The degree of weathering of rock is classified as follows:

Weathering Term	Description	Abbreviation Code
Residual Soil[1]	Material is weathered to such an extent that it has soil properties. Mass structure and material texture and fabric of original rock are no longer visible, but the soil has not been significantly transported.	RS
Extremely weathered[1]	Material is weathered to such an extent that it has soil properties. Mass structure and material texture and fabric of original rock are still visible	XW
Highly weathered	The whole of the rock material is discoloured, usually by iron staining or bleaching to the extent that the colour of the original rock is not recognisable. Rock strength is significantly changed by weathering. Some primary minerals have weathered to clay minerals. Porosity may be increased by leaching or may be decreased due to deposition of weathering products in pores.	HW
Moderately weathered	The whole of the rock material is discoloured, usually by iron staining or bleaching to the extent that the colour of the original rock is not recognisable but shows little or no change of strength from fresh rock.	MW
Slightly weathered	Rock is partially discoloured with staining or bleaching along joints but shows little or no change of strength from fresh rock.	SW
Fresh	No signs of decomposition or staining.	FR
Note: If HW and MW cannot be differentiated use DW (see below)		
Distinctly weathered	Rock strength usually changed by weathering. The rock may be highly discoloured, usually by iron staining. Porosity may be increased by leaching or may be decreased due to deposition of weathered products in pores.	DW

[1] The parent rock type, of which the residual/extremely weathered material is a derivative, will be stated in the description (where discernible).

Degree of Alteration

The degree of alteration of the rock material (physical or chemical changes caused by hot gasses or liquids at depth) is classified as follows:

Term	Description	Abbreviation Code
Extremely altered	Material is altered to such an extent that it has soil properties. Mass structure and material texture and fabric of original rock are still visible.	XA
Highly altered	The whole of the rock material is discoloured, usually by staining or bleaching to the extent that the colour of the original rock is not recognisable. Rock strength is changed by alteration. Some primary minerals are altered to clay minerals. Porosity may be increased by leaching or may be decreased due to precipitation of secondary materials in pores.	HA
Moderately altered	The whole of the rock material is discoloured, usually by staining or bleaching to the extent that the colour of the original rock is not recognisable but shows little or no change of strength from fresh rock.	MA
Slightly altered	Rock is slightly discoloured but shows little or no change of strength from fresh rock	SA
Note: If HA and MA cannot be differentiated use DA (see below)		
Distinctly altered	Rock strength usually changed by alteration. The rock may be highly discoloured, usually by staining or bleaching. Porosity may be increased by leaching or may be decreased due to precipitation of secondary minerals in pores.	DA

Degree of Fracturing

The following descriptive classification apply to the spacing of natural occurring fractures in the rock mass. It includes bedding plane partings, joints and other defects, but excludes drilling breaks. These terms are generally not required on investigation logs where fracture spacing is presented as a histogram, and where used are presented in an unabbreviated format.

Term	Description
Fragmented	Fragments of <20 mm
Highly Fractured	Core lengths of 20-40 mm with occasional fragments
Fractured	Core lengths of 30-100 mm with occasional shorter and longer sections
Slightly Fractured	Core lengths of 300 mm or longer with occasional sections of 100-300 mm
Unbroken	Core contains very few fractures

Rock Quality Designation

The quality of the cored rock can be measured using the Rock Quality Designation (RQD) index, defined as:

$$\text{RQD \%} = \frac{\text{cumulative length of 'sound' core sections} > \text{100 mm long}}{\text{total drilled length of section being assessed}}$$

where 'sound' rock is assessed to be rock of low strength or stronger. The RQD applies only to natural fractures. If the core is broken by drilling or handling (i.e., drilling breaks) then the broken pieces are fitted back together and are not included in the calculation of RQD.

Stratification Spacing

These terms may be used to describe the spacing of bedding partings in sedimentary rocks. Where used, these terms are generally presented in an unabbreviated format

Term	Separation of Stratification Planes
Thinly laminated	< 6 mm
Laminated	6 mm to 20 mm
Very thinly bedded	20 mm to 60 mm
Thinly bedded	60 mm to 0.2 m
Medium bedded	0.2 m to 0.6 m
Thickly bedded	0.6 m to 2 m
Very thickly bedded	> 2 m

Rock Descriptions

Defect Descriptions

Defect Type

Term	Abbreviation Code
Bedding plane	B
Cleavage	CL
Crushed seam	CS
Crushed zone	CZ
Drilling break	DB
Decomposed seam	DS
Drill lift	DL
Extremely Weathered seam	EW
Fault	F
Fracture	FC
Fragmented	FG
Handling break	HB
Infilled seam	IS
Joint	JT
Lamination	LAM
Shear seam	SS
Shear zone	SZ
Vein	VN
Mechanical break	MB
Parting	P
Sheared Surface	S

Rock Defect Orientation

Term	Abbreviation Code
Horizontal	H
Vertical	V
Sub-horizontal	SH
Sub-vertical	SV

Rock Defect Coating

Term	Abbreviation Code
Clean	CN
Coating	CT
Healed	HE
Infilled	INF
Stained	SN
Tight	TI
Veneer	VNR

Rock Defect Infill

Term	Abbreviation Code
Calcite	CA
Carbonaceous	CBS
Clay	CLAY
Iron oxide	FE
Manganese	MN
Pyrite	Py
Secondary material	MS
Silt	M
Quartz	Qz
Unidentified material	MU

Rock Defect Shape/Planarity

Term	Abbreviation Code
Curved	CU
Discontinuous	DIS
Irregular	IR
Planar	PR
Stepped	ST
Undulating	UN

Rock Defect Roughness

Term	Abbreviation Code
Polished	PO
Rough	RF
Smooth	SM
Slickensided	SL
Very rough	VR

Defect Orientation
The inclination of defects is always measured from the perpendicular to the core axis

intentionally blank

Sampling and Testing

A record of samples retained, and field testing performed is usually shown on a Douglas Partners' log with samples appearing to the left of a depth scale, and selected field and laboratory testing (including results, where relevant) appearing to the right of the scale, as illustrated below:

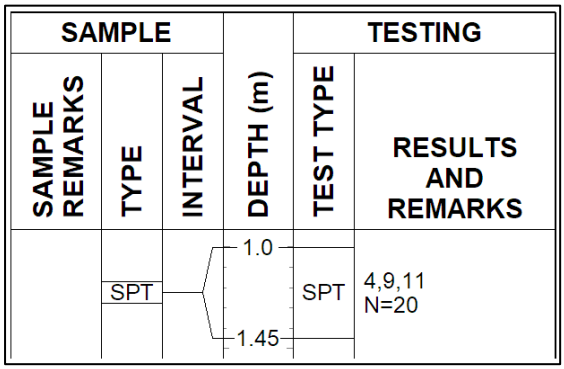

Sampling

The type or intended purpose for which a sample was taken is indicated by the following abbreviation codes.

Sample Type	Code
Auger sample	A
Acid Sulfate sample	ASS
Bulk sample	B
Core sample	C
Disturbed sample	D
Environmental sample	ES
Gas sample	G
Piston sample	P
Sample from SPT test	SPT
Undisturbed tube sample	U[1]
Water sample	W
Material Sample	MT
Core sample for unconfined compressive strength testing	UCS

[1] – numeric suffixes indicate tube diameter/width in mm

The above codes only indicate that a sample was retained, and not that testing was scheduled or performed.

Field and Laboratory Testing

A record that field and laboratory testing was performed is indicated by the following abbreviation codes.

Test Type	Code
Pocket penetrometer (kPa)	PP
Photo ionisation detector (ppm)	PID
Standard Penetration Test x/y = x blows for y mm penetration HB = hammer bouncing HW = fell under weight of hammer	SPT
Shear vane (kPa)	V
Unconfined compressive strength, (MPa)	UCS

Field and laboratory testing (continued)

Test Type	Code
Point load test, (MPa), axial (A), diametric (D), irregular (I)	PLT(_)
Dynamic cone penetrometer, followed by blow count penetration increment in mm (cone tip, generally in accordance with AS1289.6.3.2)	DCP/150
Perth sand penetrometer, followed by blow count penetration increment in mm (flat tip, generally in accordance with AS1289.6.3.3)	PSP/150

Groundwater Observations

▷	seepage/inflow
▽	standing or observed water level
NFGWO	no free groundwater observed
OBS	observations obscured by drilling fluids

Drilling or Excavation Methods/Tools

The drilling/excavation methods used to perform the investigation may be shown either in a dedicated column down the left-hand edge of the log, or stated in the log footer. In some circumstances abbreviation codes may be used.

Method	Abbreviation Code
Direct Push	DP
Solid flight auger. Suffixes: /T = tungsten carbide tip, /V = v-shaped tip	AD[1]
Air Track	AT
Diatube	DT[1]
Hand auger	HA[1]
Hand tools (unspecified)	HAND
Existing exposure	X
Hollow flight auger	HSA[1]
HQ coring	HQ3
HMLC series coring	HMLC
NMLC series coring	NMLC
NQ coring	NQ3
PQ coring	PQ3
Predrilled	PD
Push tube	PT[1]
Ripping tyne/ripper	R
Rock roller	RR[1]
Rock breaker/hydraulic hammer	EH
Sonic drilling	SON[1]
Mud/blade bucket	MB[1]
Toothed bucket	TB[1]
Vibrocore	VC[1]
Vacuum excavation	VE
Wash bore (unspecified bit type)	WB[1]

[1] – numeric suffixes indicate tool diameter/width in mm

FOUNDATION MAINTENANCE AND FOOTING PERFORMANCE

Understanding and preventing soil-related building movement

This Building Technology Resource is designed to identify causes of soil-related building movement, and to suggest methods of prevention of resultant cracking.

Buildings can and often do move. This movement can be up, down, lateral or rotational. The fundamental cause of movement in buildings can usually be related to one or more problems in the foundation soil. It is important for the home owner to identify the soil type in order to ascertain the measures that should be put in place in order to ensure that problems in the foundation soil can be prevented, thus protecting against building movement.

SOIL TYPES

The types of soils usually present under the topsoil in land zoned for residential buildings can be split into two approximate groups – granular and clay. Quite often, foundation soil is a mixture of both types. The general problems associated with soils having granular content are usually caused by erosion. Clay soils are subject to saturation and swell/shrink problems.

Classifications for a given area can generally be obtained by application to the local authority, but these are sometimes unreliable and if there is doubt, a geotechnical report should be commissioned. As most buildings suffering movement problems are founded on clay soils, there is an emphasis on classification of soils according to the amount of swell and shrinkage they experience with variations of water content. Table 1 below is a reproduction of Table 2.1 from Australian Standard AS 2870-2011, Residential slabs and footings.

CAUSES OF MOVEMENT

SETTLEMENT DUE TO CONSTRUCTION

There are two types of settlement that occur as a result of construction:

- Immediate settlement occurs when a building is first placed on its foundation soil, as a result of compaction of the soil under the weight of the structure. The cohesive quality of clay soil mitigates against this, but granular (particularly sandy) soil is susceptible.
- Consolidation settlement is a feature of clay soil and may take place because of the expulsion of moisture from the soil or because of the soil's lack of resistance to local compressive or shear stresses. This will usually take place during the first few months after construction but has been known to take many years in exceptional cases.

These problems may be the province of the builder and should be taken into consideration as part of the preparation of the site for construction.

EROSION

All soils are prone to erosion, but sandy soil is particularly susceptible to being washed away. Even clay with a sand component of say 10% or more can suffer from erosion.

SATURATION

This is particularly a problem in clay soils. Saturation creates a bog-like suspension of the soil that causes it to lose virtually all of its bearing capacity. To a lesser degree, sand is affected by saturation because saturated sand may undergo a reduction in volume, particularly imported sand fill for bedding and blinding layers. However, this usually occurs as immediate settlement and should normally be the province of the builder.

SEASONAL SWELLING AND SHRINKAGE OF SOIL

All clays react to the presence of water by slowly absorbing it, making the soil increase in volume (see table below, from AS 2870). The degree of increase varies considerably between different clays, as does the degree of decrease during the subsequent drying out caused by fair weather periods. Because of the low absorption and expulsion rate, this phenomenon will not usually be noticeable unless there are prolonged rainy or dry periods, usually of weeks or months, depending on the land and soil characteristics.

The swelling of soil creates an upward force on the footings of the building, and shrinkage creates subsidence that takes away the support needed by the footing to retain equilibrium.

SHEAR FAILURE

This phenomenon occurs when the foundation soil does not have sufficient strength to support the weight of the footing. There are two major post-construction causes:

- Significant load increase.
- Reduction of lateral support of the soil under the footing due to erosion or excavation.

In clay soil, shear failure can be caused by saturation of the soil adjacent to or under the footing.

TREE ROOT GROWTH

Trees and shrubs that are allowed to grow in the vicinity of footings can cause foundation soil movement in two ways:

- Roots that grow under footings may increase in cross-sectional size, exerting upward pressure on footings.

TABLE 1. GENERAL DEFINITIONS OF SITE CLASSES.

Class	Foundation
A	Most sand and rock sites with little or no ground movement from moisture changes
S	Slightly reactive clay sites, which may experience only slight ground movement from moisture changes
M	Moderately reactive clay or silt sites, which may experience moderate ground movement from moisture changes
H1	Highly reactive clay sites, which may experience high ground movement from moisture changes
H2	Highly reactive clay sites, which may experience very high ground movement from moisture changes
F	Extremely reactive sites, which may experience extreme ground movement from moisture changes

Source: Reproduced with the permission of Standards Australia Limited © 2011. Copyright in AS 2870-2011 Residential slabs and footings vests in Standards Australia Limited.

© CSIRO 2021

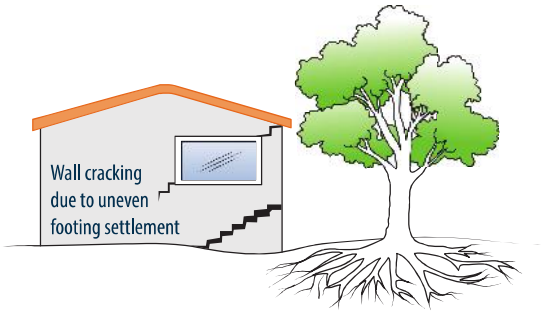

FIGURE 1 Trees can cause shrinkage and damage.

- Roots in the vicinity of footings will absorb much of the moisture in the foundation soil, causing shrinkage or subsidence.

UNEVENNESS OF MOVEMENT

The types of ground movement described above usually occur unevenly throughout the building's foundation soil. Settlement due to construction tends to be uneven because of:

- Differing compaction of foundation soil prior to construction.
- Differing moisture content of foundation soil prior to construction.

Movement due to non-construction causes is usually more uneven still. Erosion can undermine a footing that traverses the flow or can create the conditions for shear failure by eroding soil adjacent to a footing that runs in the same direction as the flow.

Saturation of clay foundation soil may occur where subfloor walls create a dam that makes water pond. It can also occur wherever there is a source of water near footings in clay soil. This leads to a severe reduction in the strength of the soil which may create local shear failure.

Seasonal swelling and shrinkage of clay soil affects the perimeter of the building first, then gradually spreads to the interior through absorption. The swelling process will usually begin at the uphill extreme of the building, or on the weather side where the land is flat. Shrinkage usually begins on the side of the building where the sun's heat is greatest.

EFFECTS OF UNEVEN SOIL MOVEMENT ON STRUCTURES

EROSION AND SATURATION

Erosion removes the support from under footings, tending to create subsidence of the part of the structure under which it occurs. Brickwork walls will resist the stress created by this removal of support by bridging the gap or cantilevering until the bricks or the mortar bedding fail. Older masonry has little resistance. Evidence of failure varies according to circumstances and symptoms may include:

- Step cracking in the mortar beds in the body of the wall or above/below openings such as doors or windows.
- Vertical cracking in the bricks (usually but not necessarily in line with the vertical beds or perpends).

Isolated piers affected by erosion or saturation of foundations will eventually lose contact with the bearers they support and may tilt or fall over. The floors that have lost this support will become bouncy, sometimes rattling ornaments etc.

SEASONAL SWELLING/SHRINKAGE IN CLAY

Swelling foundation soil due to rainy periods first lifts the most exposed extremities of the footing system, then the remainder of the perimeter footings while gradually permeating inside the building footprint to lift internal footings. This swelling first tends to create a dish effect, because the external footings are pushed higher than the internal ones.

The first noticeable symptom may be that the floor appears slightly dished. This is often accompanied by some doors binding on the floor or the door head, together with some cracking of cornice mitres. In buildings with timber flooring supported by bearers and joists, the floor can be bouncy. Externally there may be visible dishing of the hip or ridge lines.

As the moisture absorption process completes its journey to the innermost areas of the building, the internal footings will rise. If the spread of moisture is roughly even, it may be that the symptoms will temporarily disappear, but it is more likely that swelling will be uneven, creating a difference rather than a disappearance in symptoms. In buildings with timber flooring supported by bearers and joists, the isolated piers will rise more easily than the strip footings or piers under walls, creating noticeable doming of flooring.

As the weather pattern changes and the soil begins to dry out, the external footings will be first affected, beginning with the locations where the sun's effect is strongest. This has the effect of lowering the external footings. The doming is accentuated, and cracking reduces or disappears where it occurred because of dishing, but other cracks open up. The roof lines may become convex.

Doming and dishing are also affected by weather in other ways. In areas where warm, wet summers and cooler dry winters prevail, water migration tends to be toward the interior and doming will be accentuated, whereas where summers are dry, and winters are cold and wet, migration tends to be toward the exterior and the underlying propensity is toward dishing.

MOVEMENT CAUSED BY TREE ROOTS

In general, growing roots will exert an upward pressure on footings, whereas soil subject to drying because of tree or shrub roots will tend to remove support from under footings by inducing shrinkage.

COMPLICATIONS CAUSED BY THE STRUCTURE ITSELF

Most forces that the soil causes to be exerted on structures are vertical – i.e. either up or down. However, because these forces are seldom spread evenly around the footings, and because the building resists uneven movement because of its rigidity, forces are exerted from one part of the building to another. The net result of all these forces is usually rotational. This resultant force often complicates the diagnosis because the visible symptoms do not simply reflect the original cause. A common symptom is binding of doors on the vertical member of the frame.

EFFECTS ON FULL MASONRY STRUCTURES

Brickwork will resist cracking where it can. It will attempt to span areas that lose support because of subsided foundations or raised points. It is therefore usual to see cracking at weak points, such as openings for windows or doors.

In the event of construction settlement, cracking will usually remain unchanged after the process of settlement has ceased.

With local shear or erosion, cracking will usually continue to develop until the original cause has been remedied, or until the subsidence has completely neutralised the affected portion of footing and the structure has stabilised on other footings that remain effective.

In the case of swell/shrink effects, the brickwork will in some cases return to its original position after completion of a cycle, however it is more likely that the rotational effect will not be exactly reversed, and it is also usual that brickwork will settle in its new position and will resist the forces trying to return it to its original position. This means that in a case where swelling takes place after construction and cracking occurs, the cracking is likely to at least partly remain after the shrink segment of the cycle is complete. Thus, each time the cycle is repeated, the likelihood is that the cracking will become wider until the sections of brickwork become virtually independent.

With repeated cycles, once the cracking is established, if there is no other complication, it is normal for the incidence of cracking to stabilise, as the building has the articulation it needs to cope with the problem. This is by no means always the case, however, and monitoring of cracks in walls and floors should always be treated seriously.

Upheaval caused by growth of tree roots under footings is not a simple vertical shear stress. There is a tendency for the root to also

© CSIRO 2021

exert lateral forces that attempt to separate sections of brickwork after initial cracking has occurred.

The normal structural arrangement is that the inner leaf of brickwork in the external walls and at least some of the internal walls (depending on the roof type) comprise the load-bearing structure on which any upper floors, ceilings and the roof are supported. In these cases, it is internally visible cracking that should be the main focus of attention, however there are a few examples of dwellings whose external leaf of masonry plays some supporting role, so this should be checked if there is any doubt. In any case, externally visible cracking is important as a guide to stresses on the structure generally, and it should also be remembered that the external walls must be capable of supporting themselves.

EFFECTS ON FRAMED STRUCTURES

Timber or steel framed buildings are less likely to exhibit cracking due to swell/shrink than masonry buildings because of their flexibility. Also, the doming/dishing effects tend to be lower because of the lighter weight of walls. The main risks to framed buildings are encountered because of the isolated pier footings used under walls. Where erosion or saturation causes a footing to fall away, this can double the span which a wall must bridge. This additional stress can create cracking in wall linings, particularly where there is a weak point in the structure caused by a door or window opening. It is, however, unlikely that framed structures will be so stressed as to suffer serious damage without first exhibiting some or all of the above symptoms for a considerable period. The same warning period should apply in the case of upheaval. It should be noted, however, that where framed buildings are supported by strip footings there is only one leaf of brickwork and therefore the externally visible walls are the supporting structure for the building. In this case, the subfloor masonry walls can be expected to behave as full brickwork walls.

EFFECTS ON BRICK VENEER STRUCTURES

Because the load-bearing structure of a brick veneer building is the frame that makes up the interior leaf of the external walls plus perhaps the internal walls, depending on the type of roof, the building can be expected to behave as a framed structure, except that the external masonry will behave in a similar way to the external leaf of a full masonry structure.

WATER SERVICE AND DRAINAGE

Where a water service pipe, a sewer or stormwater drainage pipe is in the vicinity of a building, a water leak can cause erosion, swelling or saturation of susceptible soil. Even a minuscule leak can be enough to saturate a clay foundation. A leaking tap near a building can have the same effect. In addition, trenches containing pipes can become watercourses even though backfilled, particularly where broken rubble is used as fill. Water that runs along these trenches can be responsible for serious erosion, interstrata seepage into subfloor areas and saturation.

Pipe leakage and trench water flows also encourage tree and shrub roots to the source of water, complicating and exacerbating the problem. Poor roof plumbing can result in large volumes of rainwater being concentrated in a small area of soil:

- Incorrect falls in roof guttering may result in overflows, as may gutters blocked with leaves etc.
- Corroded guttering or downpipes can spill water to ground.
- Downpipes not positively connected to a proper stormwater collection system will direct a concentration of water to soil that is directly adjacent to footings, sometimes causing large-scale problems such as erosion, saturation and migration of water under the building.

SERIOUSNESS OF CRACKING

In general, most cracking found in masonry walls is a cosmetic nuisance only and can be kept in repair or even ignored. Table 2 below is a reproduction of Table C1 of AS 2870-2011.

AS 2870-2011 also publishes figures relating to cracking in concrete floors, however because wall cracking will usually reach the critical point significantly earlier than cracking in slabs, this table is not reproduced here.

PREVENTION AND CURE

PLUMBING

Where building movement is caused by water service, roof plumbing, sewer or stormwater failure, the remedy is to repair the problem. It is prudent, however, to consider also rerouting pipes away from the building where possible and relocating taps to positions where any leakage will not direct water to the building vicinity. Even where gully traps are present, there is sometimes sufficient spill to create erosion or saturation, particularly in modern installations using smaller diameter PVC fixtures. Indeed, some gully traps are not situated directly under the taps that are installed to charge them, with the result that water from the tap may enter the backfilled trench that houses the sewer piping. If the trench has been poorly backfilled, the water will either pond or flow along the bottom of the trench. As these trenches usually run alongside the footings and can be at a similar depth, it is not hard to see how any water that is thus directed into a trench can easily affect the foundation's ability to support footings or even gain entry to the subfloor area.

GROUND DRAINAGE

In all soils there is the capacity for water to travel on the surface and below it. Surface water flows can be established by inspection during and after heavy or prolonged rain. If necessary, a grated drain system connected to the stormwater collection system is usually an easy solution.

It is, however, sometimes necessary when attempting to prevent water migration that testing be carried out to establish watertable height and subsoil water flows. This subject may be regarded as an area for an expert consultant.

PROTECTION OF THE BUILDING PERIMETER

It is essential to remember that the soil that affects footings extends well beyond the actual building line. Watering of garden plants, shrubs and trees causes some of the most serious water problems.

For this reason, particularly where problems exist or are likely to occur, it is recommended that an apron of paving be installed around as much of the building perimeter as necessary. This paving should extend outwards a minimum of 900 mm (more in highly reactive soil) and should have a minimum fall away from the building of 1:60. The finished paving should be no less than 100 mm below brick vent bases.

It is prudent to relocate drainage pipes away from this paving, if possible, to avoid complications from future leakage. If this is not practical, earthenware pipes should be replaced by PVC and backfilling should be of the same soil type as the surrounding soil and compacted to the same density.

Except in areas where freezing of water is an issue, it is wise to remove taps in the building area and relocate them well away from the building – preferably not uphill.

It may be desirable to install a grated drain at the outside edge of the paving on the uphill side of the building. If subsoil drainage is needed this can be installed under the surface drain.

CONDENSATION

In buildings with a subfloor void, such as where bearers and joists support flooring, insufficient ventilation creates ideal conditions for condensation, particularly where there is little clearance between the floor and the ground. Condensation adds to the moisture already present in the subfloor and significantly slows the process of drying out. Installation of an adequate subfloor ventilation system, either natural or mechanical, is desirable.

© CSIRO 2021

TABLE 2. CLASSIFICATION OF DAMAGE WITH REFERENCE TO WALLS.

Description of typical damage and required repair	Approximate crack width limit	Damage category
Hairline cracks	<0.1 mm	0 – Negligible
Fine cracks which do not need repair	<1 mm	1 – Very Slight
Cracks noticeable but easily filled. Doors and windows stick slightly.	<5 mm	2 – Slight
Cracks can be repaired and possibly a small amount of wall will need to be replaced. Doors and windows stick. Service pipes can fracture. Weathertightness often impaired.	5–15 mm (or a number of cracks 3 mm or more in one group)	3 – Moderate
Extensive repair work involving breaking-out and replacing sections of walls, especially over doors and windows. Window and door frames distort. Walls lean or bulge noticeably, some loss of bearing in beams. Service pipes disrupted.	15–25 mm but also depends on number of cracks	4 – Severe

Source: Reproduced with the permission of Standards Australia Limited © 2011. Copyright in AS 2870-2011 Residential slabs and footings vests in Standards Australia Limited.

Warning: Although this Building Technology Resource deals with cracking in buildings, it should be said that subfloor moisture can result in the development of other problems, notably:

- Water that is transmitted into masonry, metal or timber building elements causes damage and/or decay to those elements.
- High subfloor humidity and moisture content create an ideal environment for various pests, including termites and spiders, and mould.
- Where high moisture levels are transmitted to the flooring and walls, an increase in the dust mite count can ensue within the living areas. Dust mites, as well as dampness in general, can be a health hazard to inhabitants, particularly those who are abnormally susceptible to respiratory ailments.

THE GARDEN

The ideal vegetation layout is to have lawn or plants that require only light watering immediately adjacent to the drainage or paving edge, then more demanding plants, shrubs and trees spread out in that order.

Overwatering due to misuse of automatic watering systems is a common cause of saturation and water migration under footings. If it is necessary to use these systems, it is important to remove garden beds to a completely safe distance from buildings.

EXISTING TREES

Where a tree is causing a problem of soil drying or there is the existence or threat of upheaval of footings, if the offending roots are subsidiary and their removal will not significantly damage the tree, they should be severed and a concrete or metal barrier placed vertically in the soil to prevent future root growth in the direction of the building. If it is not possible to remove the relevant roots without damage to the tree, an application to remove the tree should be made to the local authority. A prudent plan is to transplant likely offenders before they become a problem.

INFORMATION ON TREES, PLANTS AND SHRUBS

State departments overseeing agriculture can give information regarding root patterns, volume of water needed and safe distance from buildings of most species. Botanic gardens are also sources of information.

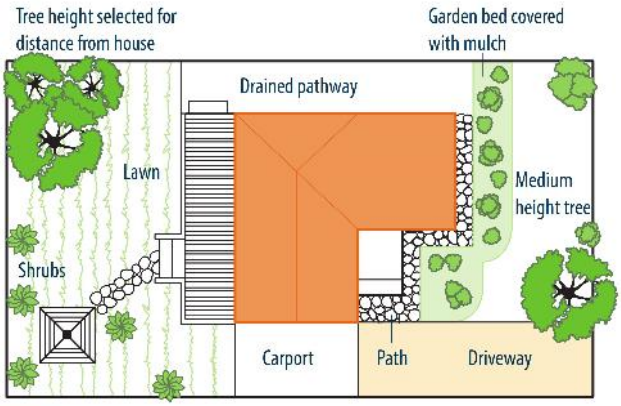

FIGURE 2 Gardens for a reactive site.

EXCAVATION

Excavation around footings must be properly engineered. Soil supporting footings can only be safely excavated at an angle that allows the soil under the footing to remain stable. This angle is called the angle of repose (or friction) and varies significantly between soil types and conditions. Removal of soil within the angle of repose will cause subsidence.

REMEDIATION

Where erosion has occurred that has washed away soil adjacent to footings, soil of the same classification should be introduced and compacted to the same density. Where footings have been undermined, augmentation or other specialist work may be required. Remediation of footings and foundations is generally the realm of a specialist consultant.

Where isolated footings rise and fall because of swell/shrink effect, the home owner may be tempted to alleviate floor bounce by filling the gap that has appeared between the bearer and the pier with blocking. The danger here is that when the next swell segment of the cycle occurs, the extra blocking will push the floor up into an accentuated dome and may also cause local shear failure in the soil. If it is necessary to use blocking, it should be by a pair of fine wedges and monitoring should be carried out fortnightly.

CSIROPUBLISHING

1300 788 000 | +61 3 9545 8400 | publishing.sales@csiro.au | www.publish.csiro.au
For information about CSIRO testing services visit www.csiro.au/en/work-with-us/services
ISBN 9781486312962 (print)/9781486312979 (digital) © CSIRO 2021
(replaces Building Technology File 18, 18-2011 and Information Sheet 10/91)
Unauthorised copying of this material is prohibited.

IMPORTANT DISCLAIMER: This information is prepared for Australia and general in nature. It may be incomplete or inapplicable in some cases.
Laws and regulations may vary in different places. Seek specialist advice for your particular circumstances.
To the extent permitted by law, CSIRO excludes all liability to any person for any loss, damage, cost or other consequence that may result from using this information.

© CSIRO 2021

TERMS AND CONDITIONS: BUILDING TECHNOLOGY RESOURCES

CONDITIONS OF USE

This publication may only be used in accordance with the following terms:

1. CSIRO (which for the purposes of these terms includes CSIRO Publishing) and its licensees own the copyright in the publication and will retain all rights, title and interest in and to the publication.
2. Once downloaded, the downloaded PDF publication may be provided by the user that initially downloads the PDF publication to other users by electronic mail once for each user licence purchased subject and pursuant to paragraph 4 below. The publication may not otherwise be copied or circulated electronically, including, for the avoidance of doubt, by electronic mail, even for internal use.
3. The downloaded publication may be printed, but the number of copies that may be printed is limited to the number of user licences purchased. That is, each user may print one (1) copy of the publication only.
4. The number of user licences purchased is shown on the tax invoice provided at the time of purchase. For the avoidance of doubt, the user that initially downloads the PDF publication shall be taken to be one (1) user. For example, if two (2) user licences are purchased, the publication may only be shared once to one (1) other user and printed once by each user (i.e. a maximum of two (2) hardcopy versions of the publication may be printed).
5. The publication (whether in PDF or printed format) may only be used for personal, internal, non-commercial purposes.
6. The publication and all its content is subject to copyright and unauthorised copying is prohibited.
7. Reproduction, renting, leasing, re-selling, sub-licensing, assignment or any supply of the publication, in print or electronically, is not permitted.
8. Retransmission, caching, networking or posting of the downloaded PDF publication is strictly prohibited.
9. Content may not be extracted for any reason and derivative works based on the publication are not permitted. The publication and any of its content may not be copied, reformatted, adapted, modified, translated, merged, reverse engineered, decompiled, dissembled or changed in any way and otherwise must not be used in a manner that would infringe the copyrights therein.
10. Ownership, copyright, trade mark, confidentiality or other marks or legends (including any digital watermark or similar) on or in the publication must not be removed, altered or obscured.
11. The security of the publication mut be protected at all times.
12. CSIRO will not provide any updating service for the publication. That is, purchasing the publication only entitles access to the publication as current at the date of purchase and does not entitle access to any amended, changed or updated version of the publication. CSIRO is not obliged to notify purchasers or users if the publication is amended, changed, updated or withdrawn after purchase.
13. If you purchased this publication via the CSIRO Publishing website, the PDF publication will remain available on the CSIRO Publishing website for 48 hours after purchasing. In the event of a communication problem during downloading, re-download the publication within 48 hours of purchase. After that time, the publication will no longer be accessible via the CSIRO Publishing website.
14. The right to use this publication pursuant to these terms will continue indefinitely, but will terminate automatically and without notice for any failure to comply with these terms. Upon termination all copies of the publication must be deleted and/or destroyed.
15. CSIRO nor any other person, to the extent permitted by law, has made or makes any representation or warranty of any kind in relation to the publication.
16. Without limiting the foregoing in any way, the information contained in the publication is general in nature. It may be incomplete or inapplicable in some cases. Laws and regulations may vary in different places. Seek specialist advice for your particular circumstances.
17. To the extent permitted by law, CSIRO excludes all liability to any person for any loss, damage, cost or other consequence that may result from using this publication and the information in it.
18. For reproduction of the publication or any portions or other use outside the circumstances set out in these terms, prior written permission of CSIRO must be sought. Please contact: publishing@csiro.au

TEST PIT LOG

CLIENT: Capital Estate Developments Pty Ltd
PROJECT: Proposed Residential Subdivision
LOCATION: Stage 7 Denman North Estate, Denman Prospect

SURFACE LEVEL: 583 AHD
COORDINATE: E:200937, N:602792
DATUM/GRID: ACT Stromlo
DIP/AZIMUTH: 90°/---°

LOCATION ID: 78
PROJECT No: 88231.60
DATE: 06/08/24
SHEET: 1 of 1

CONDITIONS ENCOUNTERED								SAMPLE				TESTING AND REMARKS	
GROUNDWATER	RL (m)	DEPTH (m)	DESCRIPTION OF STRATA	GRAPHIC	ORIGIN(#)	CONSIS.(*) DENSITY.(*)	MOISTURE	REMARKS	TYPE	INTERVAL	DEPTH (m)	TEST TYPE	RESULTS AND REMARKS
06/08/24 No free groundwater observed			TOPSOIL / Silty Sandy CLAY (CL): brown; low plasticity; fine to coarse sand. FILL.		TOP and FILL	NA	w<PL						
		0.20	FILL / Sandy Gravelly CLAY (CL), trace silt: brown; low plasticity; fine to coarse sand; fine to coarse gravel.		FILL	(VSt) to (H)	w<PL		D		0.50		
		0.80	FILL / Silty Sandy CLAY (CL), with gravel: brown; low plasticity; fine to coarse sand; fine to coarse gravel.		FILL	(VSt) to (H)	w<PL		D		1.00		
	582	1	Test Pit discontinued at 1.30m depth. Slow progress on hard gravelly fill.										

NOTES: (#) Soil origin is "probable" unless otherwise stated. (*) Consistency/Relative density shading is for visual reference only - no correlation between cohesive and granular materials is implied.

PLANT: CAT 306 CR mini excavator
OPERATOR: Bingley Electrical Pty Ltd
LOGGED: Miller
METHOD: 300mm wide bucket
REMARKS: Surface levels and coordinates are approximate only and must not be relied upon.

Refer to explanatory notes for symbol and abbreviation definitions

Douglas PARTNERS

Generated with CORE-GS by Geroc - Soil Log

TEST PIT LOG

CLIENT: Capital Estate Developments Pty Ltd
PROJECT: Proposed Residential Subdivision
LOCATION: Stage 7 Denman North Estate, Denman Prospect

SURFACE LEVEL: 585 AHD
COORDINATE: E:200921, N:602812
DATUM/GRID: ACT Stromlo
DIP/AZIMUTH: 90°/---°

LOCATION ID: 79
PROJECT No: 88231.60
DATE: 06/08/24
SHEET: 1 of 1

CONDITIONS ENCOUNTERED								SAMPLE				TESTING AND REMARKS	
GROUNDWATER	RL (m)	DEPTH (m)	DESCRIPTION OF STRATA	GRAPHIC	ORIGIN[#]	CONSIS.[*] DENSITY.[*]	MOISTURE	REMARKS	TYPE	INTERVAL	DEPTH (m)	TEST TYPE	RESULTS AND REMARKS
06/08/24 No free groundwater observed	584		FILL / Sandy Gravelly CLAY (CL), trace silt: brown; low plasticity; fine to coarse sand; fine to coarse gravel.		FILL	(VSt) to (H)	w<PL		D		0.50		
		0.60	FILL / Clayey Silty SAND (SC), with gravel: yellow brown; fine to coarse; fine to coarse gravel.		FILL	(D)	D		D		1.00		
	583												
			Test Pit discontinued at 1.60m depth. Limit of investigation.										

NOTES: [#] Soil origin is "probable" unless otherwise stated. [*] Consistency/Relative density shading is for visual reference only - no correlation between cohesive and granular materials is implied.

PLANT: CAT 306 CR mini excavator
OPERATOR: Bingley Electrical Pty Ltd
LOGGED: Miller
METHOD: 300mm wide bucket
REMARKS: Surface levels and coordinates are approximate only and must not be relied upon.

Refer to explanatory notes for symbol and abbreviation definitions

Douglas PARTNERS

Generated with CORE-GS by Geroc - Soil Log

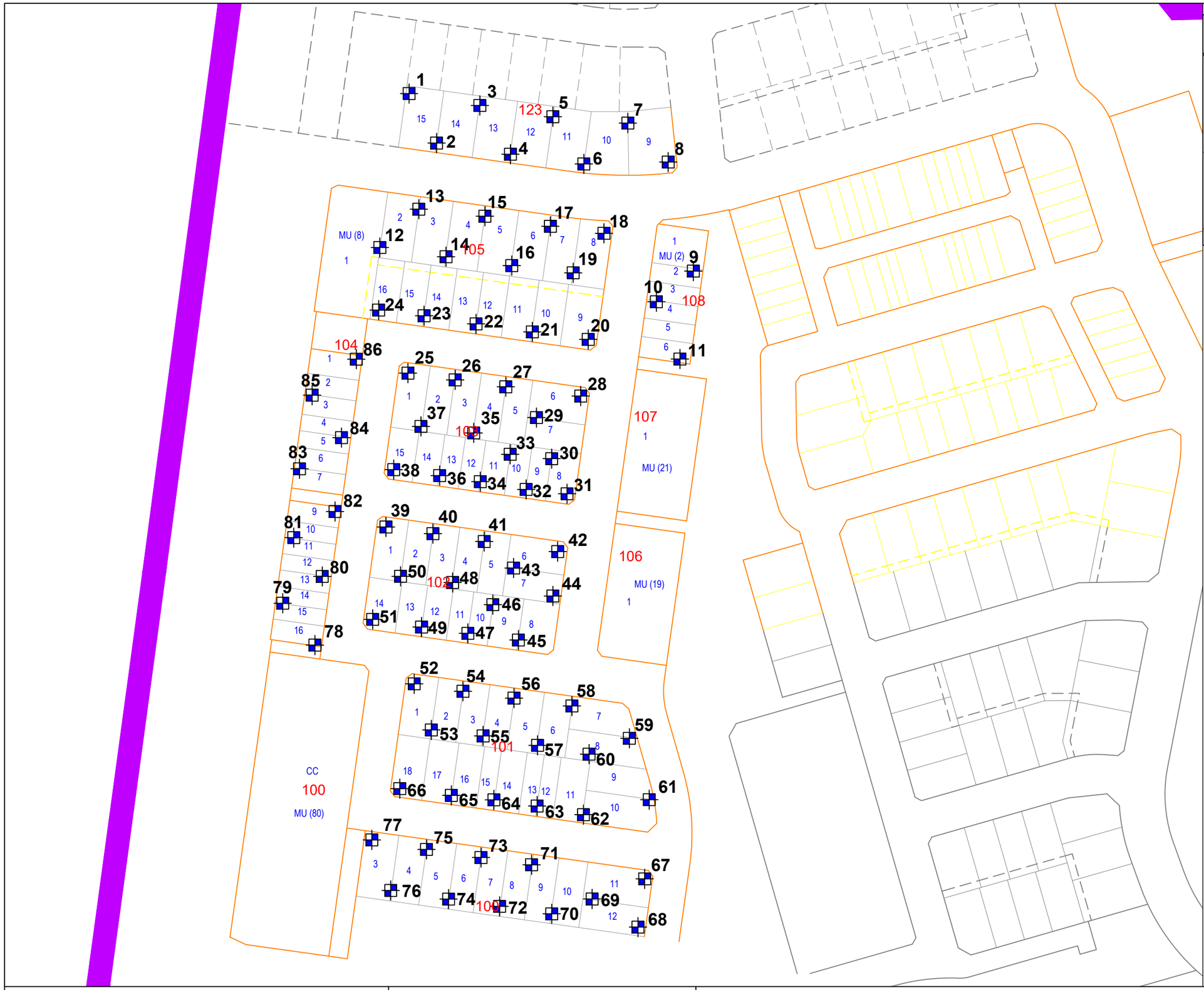

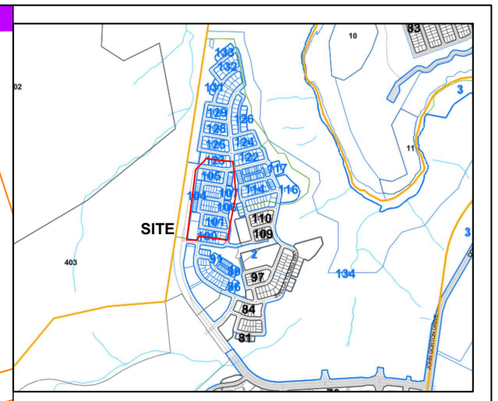

Locality Plan

LEGEND

Test Pit Location

0 17.5 35 52.5 70 87.5

1:1750 @ A3

NOTE: Base drawing from Huon
(Drawing Depth Range Plot, dated 8 June 2023)

Douglas PARTNERS

GROUNDED EXPERTISE

CLIENT: Capital Estate Developments Pty Ltd	TITLE: **Test Location Plan**	PROJECT No: 88231.60	
OFFICE: Canberra / DRAWN BY: FM	**Proposed Residential Subdivision**	DRAWING No: 1	
SCALE: As Shown / DATE: 28.05.2024	**Stage 7 Denman North Estate, Denman Prospect**	REVISION: 0	